County of Sacramento
Public Works Agency

Improvement Standards

June 1999

Price: $12.00 (Tax included)

The foregoing is a correct copy of a resolu
adopted by the Board of Supervisors, Sacrame
County, California
on MARCH 23 1999
Dated MARCH 25, 1999
Clerk of said Board of
Supervisors
By D Platt
Deputy

RESOLUTION No. 99-0326

Resolution of the Board of Supervisors of the County of Sacramento, State of California Adopting Improvements Standards, Repealing Resolution 89-0379

WHEREAS, the Board of Supervisor of the County of Sacramento, State of California deems is necessary and advisable in the public's interest to revise the existing Improvement Standards governing the design and construction of roads, streets, sanitary sewers, storm drainage, concrete structures, water supply, street lighting, land grading, and other facilities within the County of Sacramento to provide for proper development;

NOW, THEREFORE, BE IT RESOLVED AND ORDERED that the attached Improvement Standards dated June 1, 1999, for said improvements are hereby adopted on this date as the Sacramento County Improvement Standards; and

BE IT FURTHER RESOLVED AND ORDERED that any Improvements Standard previously adopted pursuant to Resolution 89-0379 shall not apply to any improvement plans that are received for checking beyond May 31, 1999; and

BE IT FURTHER RESOLVED AND ORDERED that these Improvement Standards shall be in full force and effect for all Improvements Plans received for checking on and after June 1, 1999.

BE IT FURTHER RESOLVED AND ORDERED that the Improvement Standards and Standard Drawings adopted herein, together with the Standard Construction Specifications and the references included therein to the Standard Specifications of the State of California shall govern the design and construction of improvements in Sacramento County.

ON A MOTION by Supervisor Collin, seconded by Supervisor Nottoli, the foregoing Resolution was passed and adopted by the BOARD OF SUPERVISORS of the County of Sacramento, State of California, this 23rd day of March, by the following vote, to-wit:

AYES: Supervisors Collin, Dickinson, Nottoli, Johnson

NOES: Supervisors None

ABSENT: Supervisors Niello

COUNTY OF SACRAMENTO CALIFORNIA

Muriel P. Johnson
Chairperson of the Board of Supervisors
Of the County of Sacramento

Cindy H. Turner
Clerk of the Board of Supervisors

FILED
MAR 23 1999
BOARD OF SUPERVISORS
By Cindy H. Turner
CLERK OF THE BOARD

In accordance with Section 25103 of the Government Code of the State of California a copy of this document has been delivered to the Chairman of the Board of Supervisors, County of Sacramento on

MAR 23 1999

By D. Platt
Deputy Clerk, Board of Supervisors

Sacramento County
Public Works Agency

Improvement Standards
June 1999

Contents

Section 1	Purpose and Definitions
Section 2	General Requirements
Section 3	Improvement Plan Requirements
Section 4	Streets
Section 5	Street Lights
Section 6	Sound Barrier Design
Section 7	Sanitary Sewer Design
Section 8	Domestic Water Supply System
Section 9	Storm Drainage Design
Section 10	Grading
Section 11	Erosion Control
Section 12	Survey Monuments

Note: Drawings immediately follow each section

SECTION 1

PURPOSE AND DEFINITIONS

CONTENTS **Page**

1-1 Purpose 1-1

1-2 Omissions 1-1

1-3 Definitions 1-1

SECTION 1
PURPOSE AND DEFINITIONS

1-1 PURPOSE: These Improvement Standards provide standards to be applied to improvements and private works to be dedicated to the public and accepted by the County for maintenance or operation, as well as improvements to be installed within existing rights of way and easements. This is necessary to provide for coordinated development of required facilities to be used by, and for the protection of, the public. These Standards shall serve to regulate and guide the design and preparation of plans for: construction of streets, highways, alleys, drainage, sewerage, street lighting, water supply facilities and related public improvements, and set guidelines for all private works which involve drainage, grading, erosion control, trees, and related improvements.

1-2 OMISSIONS: Any items or situations not included in these Improvement Standards shall be designed in accordance with accepted engineering practice, the County of Sacramento Standard Construction Specifications, the State of California "Highway Design Manual", July 1992 edition, and "Traffic Manual", and as required by the Director herein defined.

1-3 DEFINITIONS: When the following terms or titles are used in these standards, or in any document or instrument where these standards govern, the intent and meaning shall be as herein defined:

A. **Consulting Engineer** - Shall mean any person or persons, firm, partnerships or corporation legally authorized to practice civil, mechanical or electrical engineering in the State of California who prepares or submits improvements plan and specifications to the Public Works Agency of Sacramento County for approval.

B. **Developer** - Shall mean any person or persons, firms, partnership, corporation or, combination thereof, financially responsible for the work involved.

C. **Development** - Shall mean the act, process, or result of any land grading, utility installation, street or building construction on property.

D. **Director** - Shall mean the Directors of the Departments of County Engineering or District Engineering of Sacramento County acting either directly or through the Chiefs of the appropriate Divisions of the Public Works Agency or their authorized representatives.

E. **Laboratory** - Shall mean any testing agency or testing firm which has been approved by the Public Works Agency.

F. **Mitigation Monitoring and Reporting Program (MMRP)** – An environmental mitigation program administered by the County Department of Environmental Review and Assessment, in accordance with County Code.

G. **Specifications** - Shall mean the latest standard construction specifications adopted by the Board of Supervisors governing the construction of roads, streets, sanitary sewers, storm drainage, concrete structures, water supply, traffic signals, street lighting and other facilities within the County of Sacramento to be accepted by the County for maintenance or operation; also private grading, erosion control, drainage, and landscaping.

H. **Standard Drawings** - Shall mean the standard drawings as set forth in the Standard Construction Specifications and those drawings included herein.

I. **State** - As used in the State Specifications, shall mean Sacramento County.

J. **State Standard Plans** - Shall mean the Standard Specifications and Drawings of the State of California, Department of Transportation. (Latest Edition)

K. **Urban Area** - Shall mean the area within the boundary as defined by the Sacramento County General Plan.

SECTION 2

GENERAL REQUIREMENTS

CONTENTS **Page**

2-1 Engineer Required 2-1
2-2 Plans Required 2-1
2-3 Reference to County Specifications 2-1
2-4 Work in County Rights of Way, Easements, and Waterways 2-1
2-5 Initial Plan Submittal Require
2-6 Improvement Plan Resubmitt
2-7 Plan Check and Inspection Fe
2-8 Plan Approval
2-9 Approved Plans Required
2-10 Improvement Plan Revision During Construction
2-11 Record Plans
2-12 Conflicts, Errors, and Omiss
2-13 Change in Consulting Engin
2-14 Incorporated Area Sewer Sul
2-15 Sewer Annexation Requirem
2-16 Boring and Jacking Safety Requirements
2-17 Existing Utilities
2-18 Partial Plans 2-6
2-19 Other Agency Notifications 2-6
2-20 Inspection Requirements 2-6
2-21 Special Notices and Permits 2-7

New Section

color: white

SECTION 2
GENERAL REQUIREMENTS

2-1 ENGINEER REQUIRED: All plans and specifications for improvements which are to be accepted for maintenance by the County and private, on-site drainage and grading shall be prepared by a Consulting Engineer of the appropriate branch of engineering covering the work submitted.

2-2 PLANS REQUIRED: Complete plans for all proposed streets, bikeways, grading, erosion control, drainage facilities, sewerage, street lighting, water distribution systems, including any necessary dedications, and easements, shall be submitted to the Public Works Agency, for approval. Copies of rights-of-entry obtained from adjacent properties shall be provided to the Public Works Agency.

2-3 REFERENCE TO COUNTY SPECIFICATIONS: The General Notes of all plans shall include the following note:

> All construction and materials shall be in accordance with the latest edition of the County of Sacramento Standard Construction Specifications.

2-4 WORK IN COUNTY RIGHTS OF WAY, EASEMENTS AND WATERWAYS: The following shall govern work done within County rights-of-ways, easements, and waterways:

A. Possession of a complete set of County-approved improvement plans shall allow a contractor duly licensed by the State of California to perform work specified on the plans in County rights of way, easements and waterways. The contractor shall be bonded as required and as specified in Chapter 12.08 of the Sacramento County Code.

B. Possession of a valid encroachment permit issued in accordance with Sacramento County Code Section 12.08 and the County encroachment permit policy, as adopted by the Board of Supervisors, will allow a contractor duly licensed by the State of California to perform work specified in the permit in County rights of way.

C. Possession of a valid Sacramento County Water Agency permit will allow a contractor duly licensed by the State of California to perform the following minor work within County waterways and drainage easements:

- connecting yard drains into existing manholes
- grading within the flood plain of creeks and swales
- removing trees within creeks
- other minor items of work approved by the Director involving waterways.

2-5 INITIAL PLAN SUBMITTAL REQUIREMENTS: The initial submittal of improvement plans shall be made to the Land Division and Site Improvement Review Section of Public Works Agency. The submittal shall consist of the following:

A. Six sets of plans, or seven if the project has an MMRP, complete and in accordance with these Improvement Standards and the Standard Construction Specifications, along with any specifications, computation, test data, and other material requested by the Director. If the project is in Zone 40 of the Sacramento County Water Agency, submit 2 additional sets of plans. It is the Consulting Engineer's responsibility to know if the project has an MMRP, and if the project is in Zone 40.

B. Two copies of the off-site and on-site watershed map as well as drainage calculations in accordance with Section 9.

C. Two additional copies of the street lighting plan to be used for block numbering on street name signs, and street names.

D. One copy of the final "Conditions of Approval" for all rezones, subdivision approvals, variances, use permits, and any other discretionary planning actions for the subject site and development.

E. A portion of the plan check and inspection fee in accordance with Section 2-7.

F. The names, addresses and telephone numbers of the developer and the engineer.

G. Utility letters in accordance with Section 2-17.

H. Copies of permits as required by other agencies.

Should there be required alterations or revisions to the plans as submitted, the Director will return one copy with the corrections marked or indicated thereon. If the plans submitted are not prepared in accordance with these Improvement Standards or are not in keeping with the standards of the profession, the Director may return them unmarked and unapproved.

2-6 IMPROVEMENT PLAN RESUBMITTAL: The Director shall indicate the number of plan sets to be resubmitted. The Consulting Engineer shall notify the Director if plans being resubmitted contain revisions or alterations other than those required by the

Director on previously corrected plans. Revision notations shall not be shown on plans until after the Director has formally approved plans.

2-7 PLAN CHECK AND INSPECTION FEE: When improvement plans are initially submitted to the Public Works Agency for checking, a portion of the total plan check and inspection fee for the development as required by County Code Section 12.03 will be required as a deposit.

Should the development not be carried to completion, any portion of the required deposit over and above the accumulated costs expended by the Agency on the development will be refunded to the developer. Failure of a developer to complete a project does not relieve the developer of paying all costs incurred with the County.

The Public Works Agency shall be notified of any change of billing address. The Consulting Engineer shall notify the Public Work Agency immediately upon change of developer.

2-8 PLAN APPROVAL: No plans will be approved nor construction authorized until the Director signifies approval by signing the cover sheet of the set of plans. Revisions, corrections or additions shall be resubmitted to the Director for approval as prescribed in Section 2-10. At such time as the Consulting Engineer preparing the plans has made the necessary revisions, and signed and stamped the original plans, and fees have been paid, as provided under the provisions of Chapter 12.03 of the County Code, and Ordinance No. 1 of the Sacramento County Water Agency, and amendments thereto, the Director will sign the plans in the space provided. The Director's approval is valid for a period of twelve months. Should work not commence within the 12-month period, the plans shall be resubmitted for re-approval. The Director shall order any Contractor to cease work on any project if said Contractor does not have properly approved plans in his possession.

2-9 APPROVED PLANS REQUIRED: The Consulting Engineer shall deliver the requested number of sets of prints from the approved original plans to the Director. Typically:

Subdivision - Seven complete sets of plans, or eight if the project has an MMRP, two additional sets of the street light plans only, and one set of reproducible prints of the street light plans.

Other Developments - Ten complete sets of plans, or eleven if the project has an MMRP.

Additional sets of plans shall be delivered when trunk drainage, trunk sewer, or traffic signal facilities are shown on the plans. Additional copies of improvements plans may be required by the Director, and these shall be furnished to the county without cost.

Copies of the final utility letters required by Section 2-17 shall be included with the approved plans delivered to the Director.

2-10 IMPROVEMENT PLAN REVISONS DURING CONSTRUCTION: Should changes become necessary during construction, the Consulting Engineer shall first obtain the consent of the Director and shall then resubmit the title sheet and the plan sheets affected for approval. The changes on the plans shall be made in the following manner:

A. The original proposal shall not be eradicated from the plans but shall be lined out.

B. In the event that eradicating the original proposal is necessary to maintain clarity of the plans, approval must first be obtained from the Director.

C. The changes shall be clearly shown on the plans with the changes and approval noted on the revision signature block, conforming to Standard Drawing G-1.

D. The changes shall be identified by the revision number in a triangle delineated on the plans adjacent to the change and on the revision signature block.

Minor changes that do not affect the basic design or contract may be made upon the authorization of the Director, but said changes must be shown on record plans when the contract is completed.

The Director may specify changes in the plans in order to complete the necessary facilities, to be agreed by the consultant. Changes in the plans ordered by the Director shall conform to all of the above.

2-11 RECORD PLANS: The Developer shall be responsible for keeping an accurate record of all approved deviations from the plans and shall provide five copies of these records to the Director upon completion of the work before final acceptance of the completed improvements.

Certification by the Consulting Engineer of the finished pad elevations of subdivision lots shall be required prior to final acceptance of the subdivision improvements. Certification shall be in accordance with Section 10-8.

2-12 CONFLICTS, ERROR AND OMISSIONS: Excepted from approval are any features of the plans that are contrary to, in conflict with, or do not conform to any California State Law, Sacramento County Code or Resolution, conditions of approval, or generally accepted good engineering practice, in keeping with the standards of the professions, even though such errors, omissions or conflicts may have been overlooked in the Public Works Agency's review of the plans.

2-13 CHANGE IN CONSULTING ENGINEER: If the developer elects to have a registered civil engineer or licensed land surveyor other than the engineer who prepared the plans provide the construction staking, he shall provide the Director in writing the name of the individual or firm one week prior to the staking of the project for construction. The Developer shall then be responsible for:

- verifying all construction
- the preparation of revised plans for construction changes
- the preparation of "as built" plans upon completion of the construction.

In the Developer's notification of a change in the firm providing construction staking, he shall acknowledge that he accepts responsibility for design changes and "as built" information as noted above.

2-14 INCORPORATED AREA SEWER SUBMITTALS: The Consulting Engineer shall submit to the County for approval those sanitary sewer plans for improvements which are within the Cities of Sacramento, Citrus Heights, and Folsom and also within any sanitation district, the collection system of which is maintained by the County forces. Both City and County approval is required for such plans.

2-15 SEWER ANNEXATION REQUIREMENT: When sanitary sewer plans are submitted for an area that is not within a sanitation or sewer maintenance district, said plans will not be approved until a request for annexation to the appropriate district has been completed, unless otherwise approved by the Director. Annexation request forms and information relative to annexation procedures are available from the Water Quality Division.

2-16 BORING AND JACKING SAFETY REQUIREMENTS---Any boring or jacking operation involving an opening greater than 30 inches in diameter is subject to the State of California Division of Industrial Safety's tunnel safety requirements. The Consulting Engineer shall submit to the State Division of Industrial Safety plans and specifications applicable to the tunnel operation, with a letter requesting tunnel classification, prior to bidding the project. This procedure is also recommended to avoid project delay if there is the possibility of any personnel entering the tunnel, regardless of diameter and length. The letter should identify the Public Works Agency responsible for the project, and the agency's mailing address. The plans shall identify underground utilities and tanks or areas for storing fuel and toxic gases in the vicinity of the tunnel site, and a description of the historical land use in the area. The request for classification should be submitted allowing ample time for the Division of Industrial Safety review in order that any special requirements can be included in the project plans and specifications. The Consulting Engineer shall also attend the required pre-construction meeting.

2-17 EXISTING UTILITIES ---All existing utilities are to be shown on the plans. In addition, the Consulting Engineer shall submit prints of the preliminary and approved plans to the utility companies involved. This is necessary for the utilities to properly plan their relocation projects and needed additional facilities. Copies of the transmittal letters to the utility companies shall be provided to the Director. In addition the following note shall appear on the first page of the plans:

"No pavement work will occur within the road right-of-way prior to completion of any necessary utility pole relocation within that right-of-way."

2-18 PARTIAL PLANS: Where the improvement plans submitted cover only a portion of ultimate development, the plans submitted shall be accompanied by the approved tentative plan or study plan of the ultimate development. —

2-19 OTHER AGENCY NOTIFICATIONS: Prior to County approval, the Consulting Engineer is responsible for obtaining the approval and necessary permits of other governmental or municipal agencies when their facilities are involved.

2-20 INSPECTION REQUIREMENTS: Any improvement which will ultimately be maintained by the County shall be inspected during construction by the Director. Each phase of construction shall be inspected and approved prior to proceeding to subsequent phases.

The Director shall inspect all grading and drainage during construction.

Any improvement constructed without inspection as provided above or constructed contrary to the order or instruction of the Director will be deemed as not complying with Standard Construction Specifications or these Improvement Standards may not be accepted by Sacramento County for maintenance purposes.

The Consulting Engineer shall notify the Director when the Contractor first calls for grades and staking and shall provide the Director with a copy of all cut sheets.

Within ten days after receiving the request for final inspection, the Director shall inspect the work. The Contractor, Consulting Engineer, and Developer will be notified in writing as to any particular defects or deficiencies to be remedied. The Contractor shall proceed to correct any such defects or deficiencies at the earliest possible date. At such time as the work has been completed, a second inspection shall be made by the Director to determine if the previously mentioned defects have been repaired, altered, and completed in accordance with the plans. At such time as the Director approves the work and accepts the work for Sacramento County, the Contractor, Consulting Engineer and Developer will be notified in writing as to the date of final approval and acceptance.

For assessment districts and projects where Sacramento County participates in the costs thereof, quantities will be measured in the presence of the Director, Consulting Engineer, and Contractor, and witnessed accordingly.

2-21 SPECIAL NOTICES AND PERMITS: The Consulting Engineer shall be responsible for advising the Contractor as follows:

A. Contractors shall be in receipt of official County approved plans prior to construction.

B. Contractor shall notify all utility companies involved in the development prior to beginning of work.

C. Contractor shall notify "Underground Service Alert" two working days in advance before any excavation.

D. Contractor shall be responsible for the protection of all existing monuments and/or other survey monuments and shall notify Sacramento County Surveyor of any damaged or removed County, State or Bureau monuments.

E. Contractor shall notify Water Quality Division upon receipt of permits and payment of required fees for sewer taps in accordance with the Standard Construction Specifications.

F. Contractor shall be responsible for conducting his operation entirely outside of any floodplain boundaries unless otherwise approved. 100-year floodplain boundaries shall be clearly delineated in the field prior to construction.

G. Contractor shall be responsible for conducting his operation entirely outside of any no grading area. These areas shall be clearly delineated in the field prior to construction.

H. Where work is being done in an off-site easement the Contractor shall notify the property owner two working days prior to commencing work.

I. Contractor shall not dispose of chlorinated water into the County drainage system.

SECTION 3

IMPROVEMENT PLAN REQUIREMENTS

CONTENTS **Page**

3-1	Digital Submittals	3-1
3-2	Paper Size and Scale	3-1
3-3	Drafting Standard	3-1
3-4	Title Sheet	3-1
3-5	Title Block	3-1
3-6	Drainage, Sewer, Water, and Grading Layout	3-2
3-7	Plan Details	3-2
3-8	Required Notes	3-4
3-9	Standard Drawings	3-4

New Section

color: white

SECTION 3
IMPROVEMENT PLAN REQUIREMENTS

3-1 DIGITAL SUBMITTALS: At the discretion of the Director, plans prepared on computer may be submitted in digital format for checking. Only plans prepared using AutoCAD (version determined by Director) will be accepted. Plans may be submitted on disc or via e-mail, as required by the Director. Digital plan submittals shall include all that is required in section 2-5 of these standards.

3-2 PAPER SIZE AND SCALE: All improvement plans shall be submitted on 22" by 34" or 24" by 36" paper. Only common engineering scales shall be used.

3-3 DRAFTING STANDARD: All plans approved by the County will be scanned and stored in a document management system. Therefore, all line work must be clear, sharp and of appropriate weight. Letters and numerals must be 0.1-inch minimum height, well formed and sharp. Line work shall not intersect numerals showing profile elevations. Sharp solid arrowheads shall terminate dimension lines.

3-4 TITLE SHEET: All improvement plans shall have the following information as a minimum on the cover sheet:

A. The entire subdivision or parcel and project
B. Assessment district limits (if applicable)
C. City limits (if applicable)
D. Street Names and Widths
E. Adjacent subdivision, including names, lot lines and lot numbers
F. Property lines
G. Public easements
H. Location map
I. Scale of drawings, including scale bar
J. Index of sheets
K. Legend of symbols
L. Signature and revision blocks conforming to Standard Drawing G-1
M. Benchmark information

3-5 TITLE BLOCK: Each sheet within the set of drawings shall have an approved title block showing the following:

- Sheet title
- Sheet number
- Date
- Scale
- Consulting Engineer's name, signature and seal. Signature may be placed across the seal.
- Project title

The title block shall be either across the bottom or along the right edge of each plan sheet.

3-6 DRAINAGE, SEWER, WATER AND GRADING LAYOUT: On all subdivision plans, a separate plan is required for each of the following:

- Water
- Streetlights
- Grading and erosion control

In addition, the storm drainage, sanitary sewer, and water systems shall be shown on the plan and profile sheets. On all other plans, a composite plan layout will be acceptable but the above facilities shall be shown within the development and on plan and profile plans.

All plans showing the domestic water systems shall include signature blocks and be approved by the responsible water and fire. The signature block shall conform to Standard Drawing G-1 and shall be situated near the lower right hand corner of the first sheet of the water plans.

3-7 PLAN DETAILS: In addition to the other requirements of these Improvement Standards, the following details shall be shown on the plans submitted for approval. This does not in any way exempt the Consulting Engineer preparing plans from the responsibility of preparing neat, accurate and comprehensive plans in keeping with the standards of the profession.

A. **Record Information.** All existing and proposed:

- Right of Way lines
- Boundaries of lots fronting on the street
- Easements
- Both on-site and off-site right of way and easement lines shall be properly dimensioned.

B. **Existing Facilities.** All pertinent existing facilities shall be shown, including:

- Street striping
- Medians
- Driveways (on both sides of the street when within 40 feet of the median ending)
- Curbs
- Sidewalks
- Pavement shoulders
- Location and size of all underground utilities, storm, and sanitary sewer lines,
- Limits of 100-year flood plains
- Structures
- Trees (6" and larger) and other foliage
- Traffic signals and traffic detector loops

- Street lights, pullboxes, and underground electrical conduits
- Drainage ditches
- Utility poles
- Fire hydrants
- Retaining walls
- Any other features of the area which may affect the design requirements for the area.

When the potential utility conflict exists, the Consulting Engineer shall verify "as built" elevations for the utilities. For existing structural sections, the grade of the cross slope on the road and 20 feet into the property at driveways shall be shown.

C. **Contours and Elevations**--Existing contours and supporting spot elevations shall be shown on all plans. See Section 10 for offsite requirements.

D. **Profiles**--The plans shall show the existing profile of all roadway centerline, edges of pavement, gutter flow lines, drainage ditches, storm and sanitary sewers. Designs of proposed public improvements shall include profiles showing centerline elevations at 50-foot intervals and rates of grades, vertical curves and other vertical alignment data. When curbs and gutters are designed for reconstructed County roads, elevations shall be shown on the edge of the outside traveled way, or if the road has a full paved section, shall also be shown two feet from the proposed lip of gutter. Designs for vertical curves shall show elevations at 25-foot intervals. Where it exists, county stationing shall be used for profiles of public roads. The Consulting Engineer shall contact the Transportation Division of the Public Works Agency for such stationing.

The plans shall show the existing ground profile for a minimum distance of 200 feet beyond temporary street endings to insure proper vertical alignment within the proposed improvement limits. The 200-foot minimum shall be increased when requested by the Director.

E. **Stationing and Orientation**--The stationing on plan and profile shall read from left to right. Stationing shall increase from south to north or from west to east, except for cul-de-sacs, where stationing shall proceed from the intersection. Plans shall be so arranged that the North arrow points toward the top or upper 180 degrees, insofar as practical.

F. **Bench Marks**— Location, description, and elevation of benchmarks and datum shall be clearly delineated on the plans. The datum shall be 1929 North American Datum (U.S.G.S. or U.S.C.& G.S.). Consulting Engineers shall contact the Surveying Section of the Public Works Agency for location and elevation of the official benchmark nearest their project.

G. **California Coordinates System**--The Director may require that proposed improvements be tied into the California Coordinates System if monument

coordinate points are available within a reasonable distance (200 feet or less) of said improvement as determined by the Director.

H. **Cross-Sections**--Cross sections shall be included in the plans where determined necessary by the Director. Sections shall include all pertinent structural and topographical features. Section calls shall be identified by a number and letter and the sheet on which the section appears.

I. **Special Notes**--Special Notes shall be clearly indicated. Notes shall contain a statement regarding obtaining encroachment permits from other agencies when applicable.

3-8 REQUIRED NOTES: A list of County required notes may be obtained from the Public Works Agency and shall be included on all improvement plans submitted to the County for approval.

3-9 STANDARD DRAWINGS: Consulting engineers shall not include the standard drawings included herein on improvement plans, but shall refer to the drawing by number. If a variance to a standard drawing is intended, the drawing shall be shown with the variance noted.

IMPROVEMENT PLAN APPROVAL BLOCK

SACRAMENTO COUNTY PUBLIC WORKS AGENCY	
(PUT PROJECT NAME HERE)	
Parcel No.:	
Map Coordinates:	
Approved:	
Facility Code:	Drainage Fee:
Checked By:	

1. Project name, parcel number, and map coordinates shall be in 10 point Arial font
2. Approval block shall be located at the lower right corner of title sheet, within bottom 6 inches, and right 8 inches of page

IMPROVEMENT PLAN RIVISION BLOCK

No.	Description	Engr Init	COUNTY APPROVAL	
			By	Date

1" min. .5" min.

Put revision block on title sheet, and on all sheets which include revisions

WATER AND FIRE APPROVAL BLOCKS

Approved By:
(PUT NAME OF FIRE DISTRICT HERE)
Date

Approved By:
(PUT NAME OF WATER DISTRICT HERE)
Date

Put water and fire approval blocks on water distribution plans for subdivisions, and on the title sheet for all other projects

Cheryl Creson
Director

SACRAMENTO COUNTY PUBLIC WORKS AGENCY	
Signature Blocks	
Dec-98	3-1

SECTION 4
STREETS

TABLE OF CONTENTS

Streets **Page**

4-1	DEVELOPER'S PAVEMENT, SIGNAL, AND STREET LIGHT RESPONSIBILITY	4-1
4-2	COUNTY COST PARTICIPATION	4-3
4-3	STREET TYPE AND DESIGN WIDTH	4-3
4-4	RIGHT-OF-WAY WIDTH	4-8
4-5	STREET CLASS	4-8
4-6	STRUCTURAL SECTION	4-10
4-7	PROFILE STANDARDS	4-12
4-8	PARTIAL STREET	4-13
4-9	OFFSET INTERSECTION	4-15
4-10	DRIVEWAY	4-15
4-11	CUL-DE-SAC	4-17
4-12	ELBOW INTERSECTION	4-17
4-13	CENTERLINE RADII	4-17
4-14	SIGHT DISTANCE AT INTERSECTIONS	4-18
4-15	INTERSECTION CORNER RADII	4-19
4-16	BUS STOP	4-20
4-17	SIDEWALK RAMP	4-21
4-18	CURB AND GUTTER	4-21
4-19	CROSS GUTTER	4-21
4-20	BARRIER CURB	4-22
4-21	SIDEWALK	4-22
4-22	PEDESTRIAN LANE	4-23
4-23	REPLACING CULVERTS	4-23
4-24	TRENCHING IN EXISTING PAVED ROADWAYS	4-24
4-25	TESTING OF MATERIAL	4-24
4-26	STREET NAME	4-25
4-27	STREET SIGN LOCATION	4-25
4-28	TRAFFIC SIGNS	4-26
4-29	PERMANENT BARRICADE	4-27
4-30	STREET TREE	4-27
4-31	FENCES	4-29
4-32	PRIVATELY OWNED BRIDGE	4-29
4-33	VEHICLE ACCESS AT STREET TERMINATIONS	4-29

SECTION 4

STREETS

4-1 DEVELOPER'S PAVEMENT, SIGNAL, AND STREET LIGHT RESPONSIBILITY ---

A. Construction of street improvements shall conform to the centerline established by the Director.

B. Where the existing pavement section does not generally meet the current structural section standard and/or the centerline grade and alignment are not satisfactory to the Director, the Developer shall be responsible for the pavement section to the centerline on all streets within, adjacent, and contiguous to the Developer's project.

The Developer shall overlay any areas beyond the centerline where the design centerline grade deviates from the existing. The Developer shall also be responsible for overlaying any low areas where the new pavement meets the existing pavement to maintain a uniform cross slope.

In the absence of any project conditions of approval to the contrary, the County will pay for any pavement necessary where the full structural section is replaced beyond the centerline if the Director elects to adjust the grade and/or alignment of the existing street.

C. When making a connection to an existing street end, the Developer shall be responsible for removing and reconstructing up to a maximum of twenty feet of the existing roadway to make a satisfactory connection as required by the Director.

When making connections to existing pavement, the Developer shall be responsible for a 1-foot minimum sawcut of the existing pavement along with an additional 1-foot by 1½" deep grinding and paving. Refer to Standard Drawing 4-32. When making connections to existing new pavement (within 3 years of resurfacing), the 1-1/2" deep grinding shall extend to the lip of gutter, lane line, or center of traffic lane as required by the Director.

D. The Developer shall be responsible for all of the structural section and pavement on all streets within, adjacent, and contiguous to the project, including frontage roads, as required by the Director. If the street is to be paved under a future County contract, the Director may require a cash deposit for the roadway and related work in lieu of actual construction and the County will include the work in the County contract.

E. All temporary approaches to existing roadways required as a result of the development shall be at the Developer's expense. The temporary approaches shall be paved with a structural section to be determined individually for each situation.

F. The Developer shall be responsible for relocating existing traffic signals and street lights, and installing new traffic signals and street lights as necessary for new street and driveway locations. The Developer shall also be responsible for relocating existing traffic signals and street lights as necessary for the installation of new curbs or new curbs and sidewalks at locations where there are no existing curbs or curbs and sidewalks.

The County shall participate in the relocation costs for small lot developments (up to one acre in size) in accordance with the following:

Lot Size (Based on Final Development Size of Contract Property)	Amount of County Participation In Relocation Costs
0.14 acre or less	50%
1.00 acre or more	0%

The amount of County participation shall be prorated on a straight line basis between the values in the above schedule for lot sizes between 0.14 acre and one acre.

Any costs to upgrade or maintain existing signals such as replacing detectors shall be paid 100% by the County.

The County may elect to prepare the traffic signal relocation construction plans to be given to the Developer if requested in writing. In lieu of actual plan preparation, the County will provide all pertinent design information to be included by the Developer on their plans within 30 days after being requested in writing and the Developer's engineer provides an acceptable base plan. Cost of design will be included in direct billing to project.

G. The Developer shall be responsible for constructing or modifying curbed median islands where required by these standards, or when required for traffic control as a result of the development, as determined by the Director. If the street is to be paved under a future County contract, the Director may require a cash deposit for the roadway and related work in lieu of actual construction and the County will include the work in the County contract.

H. The developer shall be responsible for bus stops, bus turnouts, and intersection widening as shown on Standard Drawings 4-5, 4-6, 4-21, and 4-22 and in accordance with Section 4-16 of these Standards.

I. The Developer shall be responsible for all drainage facilities (bridges, pipes, culverts, and appurtenances) crossing new streets within, adjacent, and contiguous to the project. Section 4-23 states developer responsibility and County participation for drainage facilities on existing improved streets.

J. The Developer shall be responsible for all on-site modifications to allow for access for the disabled, including but not limited to: guidestrips, sidewalk ramps, etc. The developer will not be responsible for remedial roadwork or delineation for the disabled outside of the limits of their project.

4-2 COUNTY COST PARTICIPATION -- With the submittal of improvement plans for checking, the Consulting Engineer shall provide a written request to the County for cost participation if the proposed work is beyond the Developer's responsibility. This application shall show the items of work, the estimated quantities, reimbursable costs, and justification for the request.

The County will notify the Consulting Engineer by letter as to the acceptance and the extent of cost participation prior to improvement plan approval.

The Consulting Engineer is to submit the County proposal to the developer for his approval prior to the final approval of the improvement plans.

Should the Developer not approve the County proposal, time will be allowed for negotiation between the Developer and the County to arrive at a mutually acceptable price or a separate course of action prior to final approval of the improvement plans.

Any portion of work shown on the Consulting Engineer's plans, for which the County has agreed to cooperate, shall not be segregated by note or legend, but shall be included in the general contract. The County will reimburse the Developer for these cooperative items after the work has been accepted by the Director and final payment of plan check and inspection fees has been made.

Final quantities will be determined by field measurement, observed jointly by the County Inspector, the Contractor, and the Developer or his designated agent.

Unit prices prepared for fee and bond calculation and authorized in County Code Section 12.03.210 shall be used as a basis for cooperative work. The Director may negotiate unit or lump sum prices for items not usually encountered, or for unusual field conditions.

4-3 STREET TYPE AND DESIGN WIDTH -- The standard approved street types and design widths for Sacramento County are as follows:

A. 20-Foot Street (Alley) -- A street depressed in the center with a right-of-way and surface width of 20 feet. An alley will be accepted by Sacramento County as a

public alley only when it is constructed of 6-inch thick Portland cement concrete over 4 inches of aggregate base in accordance with Standard Drawing 4-1. Other structural sections may be used with the specific approval of the Director.

B. 40-Foot Street -- A minor residential street with a right-of-way width of 40 feet, a back-to-back of curb width of 32 feet, and 4-foot sidewalks. See Standard Drawing 4-2.

40-foot streets are normally used when serving 99 or fewer single-family residential units. Some duplexes may be included when the street is less than 400 feet long.

Where 40-foot streets provide access onto 84-foot, 108-foot, and 130-foot streets, the street approach shall conform to the standard for a 50-foot street. The 50-foot street approach shall be provided for a distance of 100 feet from the cross street right-of-way line along with a 40-foot taper to transition from a 50-foot street to a 40-foot street.

C. 50-Foot Street -- A primary residential street with a right-of-way width of 50 feet, a back-to-back of curb width of 42 feet, and 4-foot sidewalks. See Standard Drawing 4-2.

50-foot streets are normally used for serving more than 99 but fewer than 400 single family residential units, and for serving duplex developments.

A 50-foot street cross-section shall be used as the approach width for 40-foot streets that provide access onto 84-foot, 108-foot, and 130-foot streets. The 50-foot street approach shall be provided for a distance of 100 feet from the cross street right-of-way line with a 40-foot taper to transition from a 50-foot street to a 40-foot street.

D. 56-Foot Street -- A collector street with a right-of-way width of 56 feet, a back-to-back of curb width of 48 feet, and 4-foot sidewalks. See Standard Drawing 4-3.

56-foot streets are normally used when serving 400 or more residential units.

Where 56-foot streets provide access onto 84-foot, 108-foot, and 130-foot streets, the street approach shall conform to the standard for a 62-foot street, as shown on Standard Drawing 4-5.

At intersections with a major street, where bike lane striping is required through the intersection, Standard Drawings 4-6 and 4-7 shall apply. Standard Drawings 4-6 and 4-7 shall not apply to infill projects.

E. 60-Foot Street (Multi-Family, Commercial and Industrial)-- A collector street with a right-of-way width of 60 feet, a back-to-back of curb width of 48 feet, and 6-foot sidewalks. See Standard Drawing 4-3.

60-foot streets are required in all commercial, industrial, and multiple family developments and are normally used in the vicinity of parks, schools and other public facilities in residential areas when serving more than 400 residential units.

Where 60-foot streets provide access onto 84-foot, 108-foot, and 130-foot streets, the street approach shall conform to the standard for a 66-foot street, as shown on Standard Drawing 4-5.

At intersections with a major street, where bike lane striping is required through the intersection, Standard Drawings 4-6 and 4-7 shall apply. Standard Drawings 4-6 and 4-7 shall not apply to infill projects.

F. 62-Foot Street -- A collector approach street with a right-of-way width of 62 feet, a back-to-back of curb width of 54 feet, and 4-foot sidewalks.

A 62-foot street cross-section shall be used as the approach width for 56-foot streets that provide access onto 84-foot, 108-foot, and 130-foot streets. The 62-foot street approach shall be provided for a distance of 180 feet from the cross street right-of-way line along with a minimum 40-foot taper to provide the transition from a 56-foot street. See Standard Drawing 4-5.

G. 66-Foot Street -- A collector approach street with a right-of-way width of 66 feet, a back-to-back of curb width of 54 feet, and 6-foot sidewalks.

A 66-foot street cross-section shall be used as the approach width for 60-foot streets that provide access onto 84-foot, 108-foot, and 130-foot streets. The 66-foot street approach shall be provided for a distance of 180 feet from the cross street right-of-way line along with a minimum 40-foot taper to provide the transition from a 66-foot street to a 60-foot street. See Standard Drawing 4-5.

H. 70-Foot Street – A major collector street with a right-of-way width of 70 feet, a back-to-back of curb width of 62 feet, and 4-foot sidewalks. See Standard Drawing 4-3.

70-foot streets may be required in residential or industrial developments when warranted to provide continuous center turning lane or raised landscaped median.

A 70-foot street cross-section shall be used as the approach width for 56-foot streets, when bike lanes are required through the intersection that provides access onto 84-foot, 108-foot, and 130-foot streets. The 70-foot street approach shall be provided for a distance of 180 feet from the cross street right-of-way line along with a minimum 100-foot taper to provide the transition from a 70-foot street to a

56-foot street. See Standard Drawings 4-6 and 4-7. Standard Drawings 4-6 and 4-7 shall not apply to infill projects.

I. 74-Foot Street -- A major collector street with a right-of-way width of 74 feet, a back-to-back of curb width of 62 feet, and 6-foot sidewalks. See Standard Drawing 4-3.

74-foot streets may be required in commercial developments when warranted to provide a continuous center turning lane or raised landscaped median.

A 74-foot street cross-section shall be used as the approach width for 60-foot streets with bike lanes that provide access onto 84-foot, 108-foot, and 130-foot streets. The 74-foot street approach shall be provided for a distance of 180 feet from the cross street right-of-way line along with a minimum 100-foot taper to provide the transition from a 74-foot street to a 60-foot street. See Standard Drawings 4-6 and 4-7. Standard Drawings 4-6 and 4-7 shall not apply to infill projects.

J. 84-Foot Street -- An arterial street with a right-of-way width of 84 feet, a back-to-back of curb width of 72 feet, and 6-foot sidewalks. See Standard Drawing 4-3.

84-foot streets shall be required when shown on the Sacramento County Transportation Plan or when required by the project traffic analysis. Refer to Section 4-3(M) Major Street Design for intersection widening requirements.

K. 108-Foot Street -- A thoroughfare street with a right-of-way width of 108 feet, a back-to-back of curb width of 96 feet, and 6-foot sidewalks. See Standard Drawing 4-4.

108-foot streets shall be required when shown on the Sacramento County Transportation Plan or when required by the project traffic analysis. Refer to Section 4-3(M) Major Street Design for intersection widening requirements.

L. 130-Foot Street -- A special thoroughfare street with a right-of-way width of 130 feet, a back-to-back curb width of 118 feet, and 6-foot sidewalks. See Standard Drawing 4-4.

130-foot streets shall be required when shown on the Sacramento County Transportation Plan. Refer to Section 4-3(M) Major Street Design for intersection widening requirements.

M. Major Street Design -- 108-foot and 130-foot streets shall have a solid non-traversable median between cross street intersections. Median openings shall be spaced at least 650 feet apart. Refer to Standard Drawing 4-10. 84-foot streets should have a solid non-traversable median between cross street intersections

when a continuous center turning lane is not needed or desirable for access to abutting properties.

When intersecting with 84 feet or wider streets, minor streets need to have a minimum 50-foot right-of-way. Minor street intersections (with right turns only) should be no closer than 450 feet from each other or from the cross street intersections. Major driveways which will serve significant traffic volume, as determined by the Director, shall be considered as intersecting streets and shall be no closer than 450 feet from each other or from cross street intersections. All other driveways shall have right turns only. Driveways should be located as far apart as practical with a minimum of 150 feet between driveways or from driveways to intersections. Major driveways that will be signalized shall be designed in accordance with public street intersection standards.

All streets 84 feet and wider shall be designed to the appropriate arterial, thoroughfare or special thoroughfare standards regardless of whether they are apparent on the Sacramento County Transportation Plan. Where streets are constructed with the arterial, thoroughfare, and special thoroughfare standard widths, it is intended that they meet all the standards specified herein.

Special thoroughfare and thoroughfare streets shall be subject to full or partial access control at the discretion of the Director.

Pavement widening shall be required at all intersections of 84-foot, 108-foot, and 130-foot streets in accordance with Standard Drawings 4-5 and 4-21. Intersection widening shall be in accordance with Standard Drawings 4-6 through 4-9 when bike lane striping is required at major intersections. Standard Drawings 4-6 and 4-9 shall not apply to infill projects.

The Director may determine that widening longer than the minimum standards shown on Standard Drawings 4-5 and 4-6 is necessary at certain special case intersections when documentation was made prior to the approval of improvement plans.

Pavement widening shall be required at all intersections of Class "C" streets (see Section 4-5) with 84-foot, 108-foot, and 130-foot streets in accordance with Standard Drawing 4-12. Major driveways serving significant traffic or truck volumes, and as determined by the Director, shall be considered as intersecting streets with regard to pavement widening on Class "C" streets.

All major streets shall be required to accommodate "U" turns at all traffic signals. A minimum outside clear path radius of 44 feet of pavement shall be required.

N. Frontage Road -- A street which provides service to abutting property and control of access alongside another street for which direct access is prohibited or undesirable. Frontage roads adjacent to State freeways shall conform to the full

width standards for 56-foot and 62-foot streets. All other frontage roads shall have a 26-foot paved surface with a Type 2 vertical curb on the undeveloped side and curb and gutter and a minimum 4-foot sidewalk on the developed side. See Standard Drawing 4-4 and Section 4-1(D).

4-4 RIGHT-OF-WAY WIDTH -- Building setbacks, landscaping requirements, and parking requirements shall be based on the ultimate right-of-way width regardless of the location of existing public street improvements or right-of-way lines. In case of conflict with any zoning code requirements, the higher standard shall apply.

4-5 STREET CLASS -- The standard approved street classes of Sacramento County are as follows:

A. Class "A" Street -- Class "A" street improvements shall be in accordance with Standard Drawing 4-11 and shall consist of the following:

1. Asphalt concrete pavement over an aggregate base and aggregate subbase as required.

2. Concrete curb, gutter and sidewalks.

3. Side slopes not steeper than 1-1/2:1 in cuts or 2:1 in fills, or a reinforced concrete or masonry retaining wall beginning at the right-of-way line. Pedestrian railings may be required along sidewalks when the adjacent property slopes downward away from the street.

4. Street lights in accordance with Section 5.

Street improvements for all single family residential lots on parcels having a net area of 14,500 square feet or less and a (lot) frontage of 100 feet or less shall be Class "A". The net area shall be considered to be that portion of the lot or parcel exclusive of street rights-of-way, fenced easements, and fenced parkways. Lot frontage in the case of a corner lot shall mean the side of the lot with the narrowest street frontage as defined in the Zoning Code of Sacramento County.

When considering subdivision improvements, the average lot area and average lot frontage shall be used to determine the street class. Lots in excess of 16,000 square feet shall not be considered in averaging lot areas. Lots having a lot frontage in excess of 125 feet shall not be considered in averaging lot frontage.

Property developments on land zoned or used for duplex, multi-family residential, business and professional, commercial, and industrial uses shall require Class "A" street improvements, regardless of the individual lot frontage or area.

Single family lots adjacent to 84-foot streets, 108-foot streets, or 130-foot streets shall require Class "A" street improvements when within the limits of the urban area, regardless of the individual lot frontage. The urban area, for the purposes of this section, shall be defined as being within the County's Urban Services Boundary or a development of "urban character" approved by the Board of Supervisors outside the Urban Services Boundary.

B. Class "B" Street -- Class "B" street improvements shall be the same as Class "A" except that sidewalks may be omitted. See Standard Drawing 4-11.

Any lot designated as "Residential Land Use Zone" (RD-) in the County of Sacramento Zoning Code and not meeting the area and street frontage requirements for Class "A" street improvements, may install Class "B" street improvements.

Any lot designated as "Agricultural-Residential Land Use Zone" (AR-1) in the County of Sacramento Zoning Code shall install modified Class "B" street improvements. The street width requirement for AR-1 improvements shall be 24-foot pavement width for 40 or 50-foot. The street width requirement for AR-1 improvements shall be 26-foot pavement width for 60-foot or larger streets. See Standard Drawing 4-2.

The Director will consider an exception to the Class "B" street improvement requirements to allow Class "C" street improvements in AR-1 development in special case situations where there is no reasonable design that will provide a satisfactory hydraulic outfall for the development without using roadside ditches, or in situations where unreasonably extensive grading or on-site private drainage systems would be required to provide satisfactory drainage for the lots. In special cases when the Director approves Class "C" street improvements, Class "C" improvements may be installed consisting of 22 feet of pavement for 40-foot streets and 24 feet of pavement for 50-foot or larger streets in addition to a Type 3 curb flush with the pavement. The Type 3 curb shall be reinforced with # 4 bars in projects where truck traffic is anticipated. In lieu of Type 3 curb, a 5-foot paved shoulder may be allowed. The roadside ditch shall be graded at a 2:1 for interim projects and at a 4:1 slope for ultimate projects. See Standard Drawing 4-11 for typical Class "C" Street section.

The normal condition of using 40-foot streets to serve up to 99 single family residential units (Section 4-3(B)) shall also apply to AR-1 development.

C. Class "C" Street – Class "C" street improvements shall be in accordance with Standard Drawing 4-11 and shall consist of the following:

1. Asphalt concrete pavement over an aggregate base. Intersection widening at 84-foot, 108-foot, and 130-foot streets shall be in accordance with

Standard Drawing 4-12. For lesser street widths, approach and departure tapers may be omitted.

2. Roadside ditches in cuts and 2:1 or flatter fill slopes for interim projects and 4:1 slopes for ultimate projects.

3. Street lights in accordance with Section 5.

The total width of the asphalt concrete surface shall be as follows:

Street Type	Pavement Width
40-foot street	24 feet
50-foot street	30 feet
56-foot street and larger	36 feet

Any lot designated in the County of Sacramento Zoning Code as "Agricultural-Residential Land Use Zone," with a density smaller than AR-1 may install Class "C" street improvements.

4-6 STRUCTURAL SECTION -- The following standards for the design of structural sections shall govern the preparation of plans for proposed improvements.

A. The minimum allowable thickness of the pavement section on 20-foot wide streets (alleys) shall be 6 inches of Portland cement concrete on 4 inches aggregate base.

B. Structural sections for all roadways wider than 20 feet shall be designed to conform with the California Department of Transportation Highway Design Manual (Fourth Edition), "Topic 608 - Asphalt Concrete Pavement Structural Section Design" or other method as approved by the Director. The safety factor needed for gravel equivalent increase shall be 0.2 feet for a base type of aggregate base.

C. The minimum traffic indices (T.I.) used for the calculation of the roadway structural sections shall be as follows:

Street Type by Right-of-Way Width	Minimum Traffic Index
40' and 50' residential streets	5.0
56' to 74' streets without bus routes	6.0
56' to 74' streets with bus routes and all cul-de-sacs	6.5
84' streets	9.0
108' and 130' streets	10.0

The minimum T.I. for cul-de-sacs shall be 6.5. Special T.I.'s will be provided to the consultant engineer for industrial cul-de-sacs or other special conditions.

84-foot streets may use a T.I. of 8.0 or 8.5 if supported by a traffic study by a registered traffic engineer and subject to the approval of the Director of County Engineering. 108-foot and 130-foot streets may use a T.I. of 9.0 or 9.5 if supported by a traffic study by a registered traffic engineer and subject to the approval of the Director of County Engineering.

D. A soil report of the "R" value of subgrade of basement soil, along with calculations for structural pavement sections, shall be submitted with any plan indicating construction of roadway. In lieu of a soil report, an "R" value of 5 may be assumed.

With an "R" value of 5, the following minimum structural sections shall be used:

Street Type by Right-of-Way Width	Structural Section
40' and 50' residential streets	3" A.C. on 10" A.B.
56' to 74' streets without bus routes	3.5" A.C. on 13" A.B.
56' to 74' streets with bus routes and all cul-de-sacs	4" A.C. on 14" A.B.
84' streets	5.5" A.C. on 20.5" A.B.
108' and 130' streets	6.5" A.C. on 23" A.B.

E. As an alternate to the preceding structural sections, a full depth asphalt concrete structural section may be used subject to the approval of the Director. Full depth asphalt concrete sections shall be designed in accordance with the California Department of Transportation Highway Design Manual (Fourth Edition), "Topic 608 - Asphalt Concrete Pavement Structural Section Design" or other method as approved by the Director. The safety factor needed for gravel equivalent increase shall be 0.1 feet. A soil report of the "R" value of subgrade or basement soil, along with calculations for structural pavement sections, shall be submitted with any plan indicating construction of roadway. In lieu of a soil report, an "R" value of 5 may be assumed.

With an "R" value of 5, the following minimum structural sections shall be used for full depth asphalt concrete design:

Street Type by Right-of-Way Width	Structural Section
40' and 50' residential streets	7.5" Asphalt concrete
56' to 74' streets without bus routes	9" Asphalt concrete
56' to 74' streets with bus routes and all cul-de-sacs	10" Asphalt concrete
84' streets	14" Asphalt concrete
108' and 130' streets	16" Asphalt concrete

F. Portland cement concrete streets may be constructed with the approval of the Director. This is not generally practiced if there are pipes underneath the pavement.

G. The use of alternate road building materials will be allowed if supported by a sound pavement design study prepared by a registered civil engineer and approved by the Director. These alternate road building materials may include but not be limited to the following:

- Subgrade stabilizing and/or isolating geotextiles and grids
- Pavement stress absorbing interlayers
- In-situ soil and subgrade stabilizing add mixtures
- The use of recycled materials in the manufacture of subbase, subgrade, and asphalt concrete
- Rubberized asphalt concrete
- Subbase drainage facilities

H. Positive structural section drainage facilities shall be required if the basement soil has permeability less than 100 feet per day. Drainage system design shall be in accordance with California Department of Transportation Highway Design Manual (Fourth Edition) or other method as approved by the Director. At a minimum, subbase drainage shall be provided at all sag points in impermeable soils.

I. Class "C" streets, including the shoulders, shall have the same pavement structural section as the corresponding width of Class "A" streets.

J. In transition areas from one street width to another street width standard, the heavier structural section shall be used in the transition area.

4-7 PROFILE STANDARDS -- The following standards for the design of profiles shall govern the preparation of plans for proposed improvements. See Section 3-7(D).

A. The minimum grade on new streets shall be 0.25 percent except that the minimum curb and gutter grade around intersection corner roundings shall be 0.50 percent. Curb and gutter elevations on crest and sag vertical curves shall be adjusted to meet the 0.25 percent minimum grade.

B. The minimum grade of gutter sections constructed on existing streets shall be 0.20 percent.

C. Standard cross slope on new streets shall be 2.0 percent.

D. The minimum cross slope on street widening shall be 1.5 percent and the maximum cross slope shall be 3.0 percent. The cross slope of the widening shall conform to the cross slope of the existing pavement whenever possible.

E. When two streets intersect, neither street shall have a grade greater than 3.0 percent for a minimum distance of 40 feet measured from the curb line of the intersecting street, except in unusually rough terrain, as determined by the Director. The centerline of the lesser intersecting street shall meet the crown slope at the projected lip of the gutter. Crown slope may be reduced to 1.0 percent within the intersection, if necessary.

The minimum vertical curve length allowable at the intersection of two grades shall be 50 feet. Vertical curves on residential and collector streets may be omitted where the algebraic difference in grades does not exceed 2.0 percent. Vertical curves on all other streets may be omitted where the algebraic difference in grades does not exceed 1.5%. The minimum vertical curve data to be computed and shown on the plans shall consist of the point of intersection elevation, the tangent gradients, the middle ordinate and the length of curve.

F. The design speed and minimum stopping sight distance over any segment of urban roadway shall be as follows unless the Director specifically approves a lesser design speed:

Street Type	Recommended Design Speed	Minimum Stopping Sight Distance
40-foot R/W	25 MPH	150 feet
50-foot R/W	30 MPH	250 feet
56-foot R/W	35 MPH	250 feet
60-foot R/W	35 MPH	250 feet
70-foot R/W	40 MPH	300 feet
74-foot R/W	40 MPH	300 feet
84-foot R/W	45 MPH	360 feet
108-foot R/W	50 MPH	430 feet
130-foot R/W	50 MPH	430 feet
Rural/unposted	55 MPH	500 feet

The minimum design speed for rural and/or unposted roadways shall be 55 MPH or conform to the maximum allowable vehicular speed per the California Vehicle Code. Stopping sight distance for other design speeds shall be in accordance with California Department of Transportation Highway Design Manual (Fourth Edition) or as approved by the Director.

Stopping sight distance is measured from the driver's eyes, which are assumed to be 3.5 feet above the pavement surface, to an object 0.5-foot high on the road.

4-8 PARTIAL STREET -- Partial streets may be permitted by the Director along the boundary of a subdivision or property of the developer where the full right-of-way cannot be dedicated or where the complete street cannot be constructed, but will ultimately be constructed with adjacent development.

The minimum right-of-way width shall be 40 feet or one-half of the proposed right-of-way, whichever is greater. Lesser right-of-way widths may be allowed when approved by the Board of Supervisors in accordance with the State of California Streets and Highways Code.

Partial streets shall be constructed to a complete geometric and structural section for a minimum paving width specified by the following:

A. On 40 and 50-foot streets, the pavement width shall be 24 feet.

B. On 56 and 60-foot streets, the pavement shall extend five feet past centerline for a total of 26 feet.

C. On 70 and 74-foot streets, the pavement shall extend five feet past centerline for a total of 33 feet.

The intersection pavement edges shall have a minimum radius of 14 feet on the uncompleted side. All other edge of pavement radii shall be 25 feet or greater.

When paving partial construction of an ultimate street development, the edges of the current pavement on the uncompleted side are to be protected by use of 2"x6" approved headers, construction grade, or by placing a minimum of 1-foot additional width of aggregate base material beyond the edge of pavement to the grade and depth of the adjacent structural section.

Partial streets shall be terminated with the end of the pavement perpendicular to the street unless otherwise specified below. A 2"x6" redwood header board shall be required at the pavement ending.

Partial streets that terminate adjacent to an intersection or driveway shall be tapered 45 degrees to the street if right-of-way is available.

The end of a partial street that terminates a traveled lane in the direction of travel shall be tapered in accordance with the following equations:

Less than 45 mph, $L = WS^2/60$
Greater than or equal to 45 mph, $L = WS$

Where L = Length, W = Width (feet) and S = Design Speed (mph)

The design speed used in determining the taper shall be that given in the table in Section 4-7(F).

Pavement tapers for the termination of partial streets which are different from the above may be required by the Director.

4-9 OFFSET INTERSECTION --

A. Streets intersecting any 40-foot or 50-foot residential street from opposite sides shall have their centerlines meet, or the offset between intersections shall be a minimum of 150 feet. Lesser distance may be approved for infill projects.

B. Streets intersecting any 56-foot, 60-foot, 70-foot, or 74-foot industrial or residential collector street from opposite sides shall have their centerlines meet, or the offset between intersections shall be a minimum of 200 feet. Lesser distance may be approved for infill projects.

C. Streets intersecting any 84-foot street from opposite sides shall have their centerlines meet, or the offset between intersections shall be a minimum of 300 feet. Pursuant to this section major access driveways shall be considered as streets with respect to offsets. Lesser distance may be approved for infill projects.

D. See Section 4-3(M) for intersection spacing requirements for 108-foot and greater streets where there are raised median dividers.

4-10 DRIVEWAY – Driveway installation shall be in accordance with Standard Drawings 4-1, 4-13 to 4-16 as applicable, and the following:

A. Driveways entering Class "B" or Class "C" streets shall meet the property line at such a grade and elevation as to permit conversion to a Class "A" street without regrading the driveway beyond the property line. The maximum driveway slope shall be 10 percent, except for single family and duplex driveways, and in unusual terrain conditions, when specifically approved by the Director. The maximum algebraic difference in grade at any grade change within the public right-of-way and a driveway or between a driveway and public roadway shall be ten percent.

B. Concrete driveways will not be permitted within the right-of-way lines when entering Class "C" streets. See Standard Drawing 4-13.

C. No driveway (including transition tapers) will be allowed within 5 feet of a side property line on commercial development. See Standard Drawings 4-14 and 4-16. Exceptions may he approved by the Director for joint driveways or in unusual cases. Joint driveways may be required by the Director and a joint use driveway agreement will be required prior to approval of improvement plans.

D. The minimum width for a single family residential and duplex driveway shall be 16 feet. Maximum single family residential and duplex driveway width shall be 35 feet. Residential and duplex driveways with plus grades shall have a rise of no more than 8 inches above the back-of-sidewalk grade at a point 7 feet from the back of sidewalk.

E. All commercial and multiple family developments shall install Type A-6 or A-7 driveways except as otherwise provided in this section (see Standard Drawings 4-1, 4-14 to 4-16). The design of major driveways, which will serve significant traffic volume, as determined by the Director, shall be based on the width, cross section, and geometrics of a 60-foot or 66-foot public street. A minimum 35-foot driveway width is required on a 74-foot street. A 45-foot driveway width is required on a 74-foot street if the driveway is to be used for truck access. The standard multiple family and commercial driveway width shall be 45 feet on 84-foot, 108-foot, and 130-foot streets and 35 feet on streets of 74 feet or less in width. Lesser widths may be approved by the Director. Driveways on 84-foot, 108-foot, and 130-foot streets shall have a minimum clear spacing of 150 feet between driveways (see Standard Drawing 4-16). Lesser spacing may be approved by the Director when warranted by conditions at a particular site. Exceptions should be obtained as early as possible, prior to submission of improvement plans or development plans.

A center median up to 10 feet wide may be approved by the Director for certain driveways. The normal driveway width will be increased by the median width.

F. The standard driveway for industrial developments shall be Type A-6 or Type A-7, 45 feet wide, as shown on Standard Drawings 4-14 and 4-15.

G. When driveways are abandoned or relocated, the driveway sections must be removed and replaced with standard curb and gutter, sidewalk, and planters.

H. When street frontage improvements are existing with Type 1, Type 1A, or Type 2 curb and gutter, Type A-6 or A-7 driveways shall be installed for all accesses serving more than four single dwelling units.

I. Driveways entering levee roads and driveways entering commercial property on all roads shall have a slope not exceeding 5 percent for a minimum distance of 20 feet, measured from the edge of existing pavement. Driveways normally used by vehicles towing house or boat trailers shall have special requirements to be determined on an individual basis by the Director.

J. The nearest edge of driveways shall not be closer than 50 feet to the end of existing or future traffic medians. Medians shall be reconstructed and/or lengthened to conform to this section if necessary, as determined by the Director.

K. Visibility requirements for driveways shall be in accordance with Standard Drawing 4-20 and Section 4-14. Increased visibility requirements may be required for driveways serving a significant amount of truck traffic.

L. Major commercial driveways which will serve significant traffic volume, as determined by the Director, shall be considered as intersecting streets and shall conform to the requirements of Section 4-9 regarding offsets.

M. Driveways near major intersections shall be no closer than 150 feet from the present or future intersection curb return (see Standard Drawing 4-16). Exceptions may be granted by the Director. Exceptions should be obtained as early as possible, prior to submission of improvement plans or development plans.

N. Driveways and private roads accessing public streets with no curbs and gutters and sidewalks shall be paved with dust free surfacing (either asphalt concrete or a double chip seal). Driveways and private roads accessing public roads with sidewalks and/or curbs and gutters shall be paved with concrete or asphalt concrete. See Standard Drawing 4-13.

4-11 CUL-DE-SAC -- Cul-de-sac streets shall be terminated with a bulb, which shall have right-of-way and back of curb radius dimensions conforming to Standard Drawing 4-17 and the following:

Approach Street	R/W Radius	Back of Curb Radius
40-foot street	40 feet	36 feet
50-foot street	40 feet	36 feet
56-foot street (Industrial)	54 feet	50 feet
60-foot street	56 feet	50 feet

No cul-de-sac shall exceed 600 feet in length.

The minimum T.I. for a cul-de-sac shall be 6.5. Special T.I.'s will be provided to the consultant engineer for industrial cul-de-sacs or other special conditions.

A hammer-head bulb with a right-of-way and geometric dimensions conforming to Standard Drawing 4-18 may be approved by the Director in lieu of the standard cul-de-sac when there is no vehicular access from the end of the cul-de-sac. Special turnaround designs may be approved by the Director under unusual topographic or other conditions.

4-12 ELBOW INTERSECTION -- Elbows shall be required at right angle intersections in accordance with Standard Drawing 4-19. Only under unavoidable or extreme conditions will an elbow other than 90°±5° be permitted by the Director.

4-13 CENTERLINE RADII -- The curve data (delta angle, length, tangent, and radius) for all centerline curves shall be computed and shown on the plans.

The minimum radius curve for 40-foot streets shall be 200 feet.

The minimum radius curve for 50-foot streets shall be 350 feet with the exception that 50-foot streets exceeding 1,000 feet in length and functioning as collectors serving over

99 lots and connecting to 84-foot, 108-foot, or 130-foot streets shall have a minimum radius curve of 500 feet.

The minimum radius curve for 56-foot and 60-foot streets shall be 500 feet.

The minimum radius curve for 70-foot and 74-foot streets shall be 800 feet.

The minimum radius curve for 84-foot, 108-foot, and 130-foot streets shall be 2,000 feet.

Special consideration will be given to unusually difficult alignment problems. Any exception to the above minimum radius requirements must be approved by the Director.

Where a centerline radius on a major street that is less than the above requirements is approved by the Director, superelevation may be required.

A minimum tangent length of 200 feet is required between reversing curves on 56-foot and larger streets.

4-14 SIGHT DISTANCE AT INTERSECTIONS -- Streets should not be designed to intersect the inside of curves or at any location where in general, sight distance will be inadequate for drivers to tell if they can safely enter the traffic flow or cross the street. The minimum distance from an intersection to a curve should be the applicable minimum sight distance listed below. Exceptions may be made by the Director for especially difficult design circumstances, only if visibility easements to provide adequate sight distances are dedicated. Minimum intersection design sight distance standards shall be as follows:

Minimum Sight Distance

Type of Street Being Entered	Recommended Design Speed	Minimum Sight Distance*
40-foot R/W	25 MPH	280 feet
50-foot R/W	30 MPH	330 feet
56-foot R/W	35 MPH	390 feet
60-foot R/W	35 MPH	390 feet
70-foot R/W	40 MPH	440 feet
74-foot R/W	40 MPH	440 feet
84-foot R/W	45 MPH	500 feet
108-foot R/W	50 MPH	550 feet
130-foot R/W	50 MPH	550 feet

*Distance measured from an entering driver's eye position to the position of the closest approaching vehicle's far front corner.

The entering driver's eye position shall be assumed 3 feet to the right of the entering street's centerline, 3.5 feet above the pavement surface, and 11 feet clear of the nearest vehicle lane on the street being entered.

The position of the closest approaching vehicle's far front corner shall be assumed 3 feet from the edge of the nearest approaching vehicle lane and 4.25 feet above the pavement surface for each direction of travel.

Major driveways serving significant traffic volume, as determined by the Director, shall be considered as intersecting streets with regard to intersection sight distance requirements. Minor driveways and private streets should provide the recommended intersection sight distance, and at a minimum, shall provide for stopping sight distance.

All streets and driveways shall conform to Standard Drawing 4-20 for corner visibility requirements, as well as to the requirements herein. Visibility easements shall describe an area to be maintained clear of any and all obstructions to a clear view from the adjacent streets except as exempted by the County Code. No sign, hedge, structure, natural growth, fence, or other obstruction of any kind whatsoever to a clear view, higher than 2 1/2 feet above the nearest pavement surface (or traveled area where no pavement exists) shall be installed or maintained or shall be permitted to be installed or maintained within the easement area.

Visibility easements shall be recorded on subdivision maps when required, or by separate document if no map will be recorded.

All visibility easement areas between fences or walls and curbs or sidewalks shall be improved as follows:

A. Standard Portland cement concrete sidewalk shall be placed in all areas having a width of 3 feet or less, and in all areas within intersection corner roundings.

B. All areas having a width greater than 3 feet and not within intersection corner roundings shall be surfaced with 2 inches of asphalt concrete or other impervious, non-raveling surfacing subject to the approval of the Director. Soil sterilization shall be applied in accordance with Section SS33-04 of the Standard Construction Specifications.

C. Low profile landscaping may be allowed in the visibility control area providing that area is maintained by a responsible public entity and the landscape plans receive approval from the County.

4-15 INTERSECTION CORNER RADII -- Minimum right-of-way and edge of pavement radii for intersection corner roundings shall be in accordance with the Standard Drawings and the following:

Street Type	R/W Radius	Class "A" and "B" Streets Edge of Pavement (Curb and Gutter Lip Radius)
40-foot	20 feet	27 feet
50-foot	20 feet	27 feet
*50-foot	25 feet	32 feet
All others	25 feet	32 feet (4-foot sidewalks) 34 feet (6-foot sidewalks)

* intersects with a wider street

When two streets of different widths intersect, the radius for the narrower street shall apply, except that when a 50-foot street intersects a wider street, the radius for the wider street shall apply.

All intersection pavement edges on Class "C" streets shall have a minimum radius of 25 feet where widening is not required by Section 4-3(M).

All intersection pavement edges on partial streets shall have a minimum radius of 14 feet on the uncompleted side. All other edge of pavement radii shall be 25 feet or greater as determined by turning requirements at the subject location.

4-16 BUS STOP -- Bus stop turnouts with paved shelter pad areas shall be required on 84-foot streets, 108-foot streets, and 130-foot streets at all intersections with 56-foot or larger streets. Bus stop turnouts may also be required at other locations as determined by the Director. Bus stop turnouts shall be located on the far right hand side of the intersection, unless otherwise required by the Director, and shall be in accordance with Standard Drawing 4-21.

At all intersections of 84-foot, 108-foot, and 130-foot streets with other 84-foot, 108-foot, and 130-foot streets, bus stops shall be provided with turnouts that are integrated with standard intersection widening in accordance with Standard Drawings 4-5 and 4-6.

Bus stop turnouts shall be provided on 84-foot, 108-foot, and 130-foot streets in accordance with Standard Drawings 4-5 and 4-6 at street intersections, which have or will need traffic signals as determined by the Director. Bus stop turnouts shall be provided at approximately ¼ mile intervals along 84-foot, 108-foot, and 130-foot streets.

Where intersections are too widely spaced to provide satisfactory bus stop intervals, as determined by the Director, mid-block bus stops and turnouts may be required. Sidewalks shall be 6 feet wide at bus stops with a 7-foot by 28-foot P.C.C. pad to accommodate bus shelters as shown on Standard Drawings 4-21 and 4-22. Reinforced Type 2 curbs shall be required at all bus stops and turnouts in accordance with Standard Drawing 4-22.

4-17 SIDEWALK RAMP -- Sidewalk ramps shall be constructed at all street intersections and at other locations where required by the Director, in accordance with Standard Drawings 4-23 and 4-24, as applicable.

Intersections with Type 1A (rolled) curbs shall have fully depressed ramps in accordance with Standard Drawing 4-23.

Intersections with Type 2 (vertical) curbs shall have sloped ramps in accordance with Standard Drawing 4-23.

At "T" intersections, one ramp shall be constructed in the appropriate position at the nearest property line on the far side of the through street, opposite the ramps at the corner rounding of the intersecting street so that pedestrians are encouraged to cross the through street on the leg unaffected by left-turning traffic from the "T" street.

All unsignalized intersections with an 84-foot, 108-foot, or 130-foot street shall have two sidewalk ramps per corner as shown on Standard Drawing 4-24. At signalized intersections with an 84-foot, 108-foot, or 130-foot street, in lieu of the above stated requirement, and only with the approval of the Director, each corner may be designed with a single sidewalk ramp with a 6-foot pan as shown on Standard Drawing 4-23.

4-18 CURB AND GUTTER -- Curb and gutter shall be installed adjacent to all developments in accordance with Standard Drawing 4-25 and the following:

A. Type 1A Curb and Gutter: All developments and all locations not included in B through D below, or as required by the Director.

B. Type 1 Curb and Gutter: 40 foot and 50 foot streets in single family residential developments.

C. Type 2 Curb and Gutter: Frontage roads; parks; unfenced schools; open space areas; public facilities; 50-foot, 56-foot, 60-foot, 66-foot, and 74-foot streets with commercial, industrial, and multi-family (not duplex) developments.

D. Type 2 Curb and Gutter: Within the curb return areas of all intersections on 84-foot, 108-foot, and 130-foot streets, and at all bus turnouts.

E. Type 2 Curb and Gutter: Locations on 84-foot, 108-foot, and 130-foot streets where the sidewalk is separated from the curb by lawn or approved landscaping.

4-19 CROSS GUTTER -- Cross gutters may be permitted on 40-foot and 50-foot streets with the specific approval of the Director when the intersection cannot reasonably be drained to an underground system. See Standard Drawing 4-26. No cross gutter will be allowed

on 56-foot or greater streets. Cross gutters will also not be allowed on any approach to a signalized intersection.

4-20 BARRIER CURB -- Barrier curbs shall be in accordance with these standards and Standard Drawing 4-25 (Type 3, 4, or 5 curb). Barrier curbs shall be required at all locations where parking will be allowed in a front yard. See Standard Drawing 4-27 for planter and barrier curb details (lawn may extend to the back of sidewalk in lieu of planters).

A barrier curb shall be required at the back of sidewalk at all commercial, industrial, and multi-family residential properties and landscape corridors where landscape planters containing soil and/or mulch are adjacent to the sidewalk. A barrier curb is not required at the back of sidewalk adjacent to lawn.

A barrier curb shall be required at bus stops behind a sidewalk where the slope is toward the sidewalk (to prevent sheet flow across the sidewalk). Undersidewalk drains shall be used to remove drainage collected at the back of the barrier curb, as necessary to prevent any flow across the sidewalk. See Standard Drawings 4-22 and 4-28.

A barrier curb shall be required behind a sidewalk where the slope behind the sidewalk is greater than 6:1 and the slope is away from the sidewalk (for pedestrian safety). Where a retaining wall is allowed, creating a dropoff adjacent to the sidewalk, a minimum 36-inch high barrier fence is required in lieu of the barrier curb at the back of the sidewalk (see Section 4-31). Lot grading shall be done so as to not require fencing immediately adjacent to intersections and driveways in violation of the sight distance and visibility requirements of Standard Drawing 4-20 and Section 4-14.

4-21 SIDEWALK -- Sidewalks shall be in accordance with these standards and the Standard Drawings.

All school developments shall have 8-foot sidewalks along all frontages, with the exception that 6-foot sidewalks may be used along fenced play areas where no access is provided, as determined by the Director.

Where utility poles and other obstructions are situated within the planned sidewalk section, a minimum of 4 feet of clear uninterrupted sidewalk area shall be provided (see Standard Drawing 4-41). Where it is necessary to widen the sidewalk beyond its standard width to attain the 4-foot clearance, the widened area shall extend a minimum of 5 feet beyond each side of the obstruction and a 10-foot taper on each side of the widening shall be required.

Sidewalk widening shall be required at all major intersections on backup lot developments in accordance with Section 4-14.

Where sidewalks end in fill areas, the fill shall be extended beyond the end of the sidewalk for a minimum distance of 6 feet. As an alternate, a cut-off wall may be constructed at the end of the sidewalk and appropriate connection to the existing public street shall be provided for pedestrians traveling beyond the end of the sidewalk.

With approval by the Director, sidewalks may be separated from the curb by approved landscaping (meandering sidewalks). The width of the sidewalk will correspond with the design width of the street. The maximum cross slope on meandering sidewalks shall be 2%. The distance between the back of the curb and the edge of the sidewalk can vary, but shall not be less than 5 feet nor more than 25 feet, except at transitions. If trees are to be planted in the landscaping, the minimum distance between the back of the curb and the edge of the sidewalk shall be 8 feet. The meandering sidewalks will be designed to the specifications in Standard Drawing 4-29. For Case I, the sidewalk will have at least a 2-foot wide straight path down the center and a 10-foot minimum distance at the back of walk between landscaped areas. A Type 2 curb & gutter shall be required along the entire length of meandering sidewalk. For Case II, the sidewalk will have no abrupt changes in direction and will be constructed using only tangents of any length and inside radii of at least 150 feet. Type 2 curb & gutter shall be required at all locations where the sidewalk is separated from the curb. The Director may approve other configurations of meandering sidewalks to save existing trees or for special design applications.

4-22 PEDESTRIAN LANE -- Pedestrian lanes within a development shall be constructed with a minimum of 3-5/8 inches of Portland cement concrete, Class "B", for the full width of the easement. The walkway will be constructed on six inches of aggregate base.

The maximum grade for pedestrian lanes shall be 8.33 percent.

Pedestrian lanes, where situated between lots, shall be fenced with chain link fencing from the street right of way to the back lot line. These fences shall be 6 feet high from the building setback line to the back lot line and 36 inches high from the building setback line to the street right-of-way line.

Cross fencing to control access shall be placed at the street ends of all pedestrian lanes in accordance with Standard Drawing 4-30.

All pedestrian lanes shall have lighting installed in accordance with Section 5-8(C).

4-23 REPLACING CULVERTS -- The County will cooperate in the replacement of highway cross culverts for the same length as the existing culverts as follows (See Section 4-2):

A. The entire cost for inflowing cross culverts to the property under development that must be replaced.

B. The entire cost for out-flowing cross culverts if the existing culvert is of unsatisfactory size and has unsatisfactory grade.

C. If the existing out-flowing cross culvert is to a satisfactory grade but unsatisfactory size, the County will pay for the cost of the pipe only.

D. If the existing out-flowing cross culvert is of satisfactory size, the County will not participate in the cost to replace the culvert.

E. Major trunk and collector drainage facilities being constructed by agreement with the Sacramento County Water Agency will be replaced for the entire right-of-way width in accordance with the foregoing and in conformance with these Improvement Standards.

4-24 TRENCHING IN EXISTING PAVED ROADWAYS -- Crossings other than perpendicular crossings of existing roadways and all trenching in high traffic locations shall provide for select backfill material and increased structural section depth over the standard for that particular roadway. Boring may be required on 84-foot, 108-foot, and 130-foot streets where, in the opinion of the Director, high peak hour traffic volumes or other unusual conditions exist. The Developer may be required to coordinate trenching work schedules to avoid cutting new pavement in instances where repaving is planned by the County. No trenching will be permitted on any street that has been recently constructed or has been overlaid within the last three years. When such trenching cannot reasonably be avoided, such work should be in accordance with Section SS28-04E of the Standard Construction Specifications and Standard Drawing 4-31.

4-25 TESTING OF MATERIAL -- Testing of materials to be utilized in work performed under the Standard Construction Specifications shall be performed in accordance with the methods of the Laboratory of the State of California, Department of Transportation. Signed copies of the test results, as required, shall be submitted to the Director. Test results shall show clearly the name of the individual and firm performing the tests, as well as the name of the project, the date of sampling, and the date of testing. Tests performed by the County Materials Laboratory will be charged to the Developer as part of inspection billing.

The tests indicated in the Standard Construction Specifications will be the minimum required. In large developments, or those developments presenting special problems, a more comprehensive and extensive testing program may be required. Such conditions will be evaluated and an appropriate testing program prescribed on an individual basis. Two copies of any Federal Housing Administration required soils tests shall be submitted with proposed plans.

4-26 STREET NAME -- All roads and streets within a development shall be named by the Developer subject to the approval of the Director. No duplication of names already in use or previously proposed will be permitted. Sound-alike names or names with more than 13 spaces are not acceptable. Street names at intersections shall be continued on both sides of the intersecting streets.

Street name signs shall be furnished and erected by the Developer. Street name signs shall conform to the requirements of the Standard Construction Specifications and these Improvement Standards.

Street names and street name sign locations shall appear on plans submitted for approval. Sign details shall be as shown on Standard Drawing 4-33.

Block numbering shall be required on all street name signs.

Private roads that are paved with asphalt or Portland cement concrete and/or are served by County Standard A-7 driveways or equal and that serve five or more residences shall have street name signs installed in accordance with Section 4-27(B) below. Street name signs for private roads may be the same as for public streets (Standard Drawing 4-33) except the words "Sacramento County" must be omitted. Also, a separate additional sign must be placed on the same post saying "Not a County Road", which shall be 9 inches wide, 8 inches high, and have 1-3/4 inch high black letter on a white background.

4-27 STREET SIGN LOCATION -- Street sign locations shall conform to the following:

A. Two street name sign installations (with four sign plates on each post) are required at each intersection where one or both of the intersecting streets has a right-of-way width of 84 feet or greater. At a four-way intersection, the installations shall be located on both far right-hand corners of the intersection relative to the street having the greater right-of-way width or relative to the more important street if right-of-way widths are equal.

At a "T" intersection, the first installation shall be located on the far right-hand corner of the intersection, relative to the through street, and the second installation shall be located adjacent to the through street at a point in line with the centerline of the terminating street. One sign plate should be omitted from the standard four-plate installation at the "T" intersection sign locations where an approach street does not exist.

B. One street name sign installation (with four sign plates on each post) is required at each intersection where both intersecting streets have a right-of-way width of less than 84 feet. At a four-way intersection, the installation shall be located on one of the far right-hand corners of the intersection relative to the street having the greater right-of-way width or relative to the more important street if the right-of-

way widths are equal. At a "T" intersection, the installation shall be located on the far right-hand corner relative to the through street.

C. For highways with frontage roads, the street name sign installations shall be located in the divider strip between the frontage road and the main traveled lanes of the highway. All other requirements shall be as outlined above, except that only one sign will be required (in the divider strip in line with the centerline of the minor street) when there is no opening in the divider strip for access to the main highway.

D. Standard Drawings 4-34 through 4-37 show placement details for street name signs. On streets having a right-of-way width of 84 feet or greater, the street name sign installations are to be located adjacent to the more important street, at the end of the curb return. On streets with right-of-way widths less than 84 feet, the street name sign installations are to be located at the midpoint of the curb return.

E. Street name signs shall be placed on street light poles wherever possible, in accordance with Standard Drawings 4-35 and 4-36.

F. At signalized intersections, street name signs shall be placed on all four corners of four-legged intersections and on three corners on "T" intersections. In addition, internally illuminated street name signs are to be installed on their own clamp-on steel mast arms, 9'-3" in length, 3-5/8' in diameter, mounted at the 27-foot level.

4-28 TRAFFIC SIGNS -- All cul-de-sac and dead-end (stub) streets greater than 300 feet in length and all cul-de-sac and dead-end (stub) streets less than 300 feet in length where the curb at the centerline of the end of the street is not visible from the standard driver's eye position at the entering intersection shall be posted with a standard 24" x 24" code W53 (Not A Through Street) sign. The bottom of the sign shall be a minimum of 7 feet above the sidewalk. The standard location for the W53 sign is on the right hand side at the tangent point of the corner rounding, 6 inches (minimum) from the back of sidewalk.

All hammer-head street ends shall be posted with a standard 24" x 24" Code W-31 (end) sign, and a standard 18" x 18" red Type N marker. The red Type N marker shall be mounted below the W31 sign, on the same post. The top of the red Type N marker shall be a minimum of 4 feet above the sidewalk. The standard location for the W31 - red Type N installation is in the head on position, facing traffic, approximately 3 feet to the right of the prolongation of the street centerline, 6 inches (minimum) from the back of sidewalk.

The sign posts shall be 4" x 4" S4S treated Douglas fir (State of California, Spec. No. 56-2.02B).

4-29 PERMANENT BARRICADE -- Where improvements are temporarily terminated on a street proposed to be extended in the future, the improvements shall include a permanent type barricade at the end of the street extending completely across the right-of-way to prohibit access and to serve as a warning to the public. The barricade shall be constructed, erected, painted, and signed in accordance with Standard Drawing 4-38. When necessary, barricades may be lengthened by making the 2" x 12" plank continuous with splicing at the posts.

Gates may be required where streets stub into public park areas or like areas.

Timber barricades with SW-44 signs and Type "L" markers in accordance with Standard Drawing 4-39 shall be required where partial street widening terminates at the far end of the widening in the direction of traffic. If the ground beyond the pavement constriction is free of fixed objects and relatively flat, the Director may approve the placement of delineators on 6-foot spacing as shown on Drawing 4-39 in lieu of a timber barricade and signs.

Sidewalk barricades shall be constructed at the end of sidewalks where pedestrians cannot safely continue beyond the end of the sidewalk. Sidewalk barricades shall conform to Standard Drawing 4-40.

4-30 STREET TREE -- Permission to remove any tree in County rights-of-way or easements shall be obtained from the Director in advance. A Tree Removal Permit or Encroachment Permit is required.

All trees removed from within the ultimate right-of-way shall be replaced with trees from the approved street tree list if required per the project conditions of approval or required by the Director.

Trees shall not be planted any closer than five feet from the back of sidewalks adjacent to County streets unless approved by the Director. If trees are approved to be planted closer than 5 feet, then a root control barrier shall be installed. A 20-foot wide panel shall be centered on the trunk of each tree planted. Root control panels adjacent to sidewalks shall be 12" deep minimum. Root control panels adjacent to curb and gutter shall be 18" deep minimum. Root control panels adjacent to median curbs shall be 24" deep minimum.

Where there are 4-foot minimum planters adjacent to the sidewalks, the Planters shall be widened to accommodate the planting of trees.

See Sections 3-6(B) and 9-7 of these Improvement Standards, and Section SS-110 and Standard Drawing L-1 of the Standard Construction Specifications for additional requirements regarding trees.

3-7B. ~~Exception~~ Plan Details Existing Facilities Trees (6" and Larger)

10-7(?) Grading at Trees

Approved trees for planting in County rights-of-way and public easements are listed as follows (desired trees not listed may be planted with the approval of the Director):

DECIDUOUS STREET TREES

Botanical Name	Common Name
Acer platanoides	Norway Maple
Acer platanoides "Crimson King"	Red Leaf Norway Maple
Acer platanoides "Deborah"	Deborah Maple
Acer rubrum	Red Maple
Acer rubrum "Autumn Flame"	Autumn Flame Maple
Acer rubrum "October Glory"	October Glory Maple
Acer rubrum "Red Sunset"	Red Sunset® Maple
Carpinus betulus	European Hornbeam
Carpinus betulus "Fastigiata"	Pyramidal European Hornbeam
Celtis occidentalis	Hackberry
Celtis sinensis	Chinese Hackberry
Fraxinus americana "Autumn Purple"	Autumn Purple Ash
Fraxinus uhdei	Evergreen Ash
Nyssa sylvatica	Tupelo/Sour Gum
Pistacia chinensis	Chinese pistache
Platanus acerifolia "Bloodgood"	London PlaneTree
Platanus acerifolia "Columbia"	Columbia PlaneTree
Platanus acerifolia "Yarwood"	London PlaneTree
Pyrus calleryana "Aristocrat"	Aristocrat
PearPyrus calleryana "Capital"	Capital Pear
Pyrus calleryana "Chanticleer"	Chanticleer Pear
Quercus cerris	Turkey Oak
Quercus coccinea	Scarlet Oak
Quercus lobata	Valley Oak
Quercus macrocarpa	Burr Oak
Quercus phellos	Willow Oak
Quercus robur	English Oak
Quercus rubra	Red Oak
Sapium sebiferum	Chinese Tallow Tree
Tilia americana	American Linden

EVERGREEN STREET TREES

Botanical Name	Common Name
Laurus nobilis	Grecian Laurel
Magnolia grandiflora	Southern Magnolia
Magnolia grandiflora "St. Mary's"	St. Mary's Magnolia
Quercus agrifolia	Coast Live Oak
Quercus ilex	Holly Oak
Quercus suber	Cork Oak
Quercus wislizenii	Interior Live Oak
Umbellularia california	California Bay

CONIFER STREET TREES

Botanical Name	Common Name
Calocedrus decurrens	Incense Cedar
Pinus halenpensis	Allepo Pine

STREET TREES UNDER POWERLINES

Botanical Name	Common Name
Acer palmatum	Japanese Maple
Acer buergeranum	Trident Maple
Cercis occidentalis	Western Redbud
Cercis canadensis	Eastern Redbud
Lagerstroemia indica (tree standard)	Crape Myrtle
Olea europa 'Fruitless'	Fruitless Olive
Prunus species (tree standard)	Flowering plums
Pyrus kawakamii	Evergreen Pear

4-31 FENCES -- The location for fences or walls along public streets shall conform to the requirements of the Sacramento County Zoning Code, Sections 301-60 and 301-61. Fences or walls shall not encroach upon visibility easements required by Section 4-14 and Standard Drawing 4-20. All fences and walls are subject to the visibility requirements of the Sacramento County Code (Title 12).

Fences and walls may require modification to accommodate street light poles and/or foundations.

When a barrier fence is required by the conditions described in Section 4-20, "Barrier Curb," the barrier fence shall be three feet high, shall be chain link type (or another type approved by the Director), shall be placed at the back of sidewalk, and shall conform to the visibility requirements described herein.

4-32 PRIVATELY OWNED BRIDGE – A bridge intended for the sole use of the occupants of a multi-family type development or any bridge on a private road shall be designed to withstand an 4-20 load, unless specifically approved by the Director for a lesser loading. Other design features of the bridge, including but not limited to widths, railings, clearances and materials shall be in conformance with County and State Standards. A soil report prepared by a qualified soil engineer will be required. Design calculations signed by the Consulting Engineer and including the registration number shall be required.

4-33 VEHICLE ACCESS AT STREET TERMINATIONS --Vehicular access shall not be permitted from the end of a stubbed street. To obtain vehicular access, the street must be extended through the property or properly terminated with a standard cul-de-sac bulb. In cases where no access is provided to the end of the street, a modified cul-de-sac bulb may be approved by the Director. (See Section 4-11 of these Standards.)

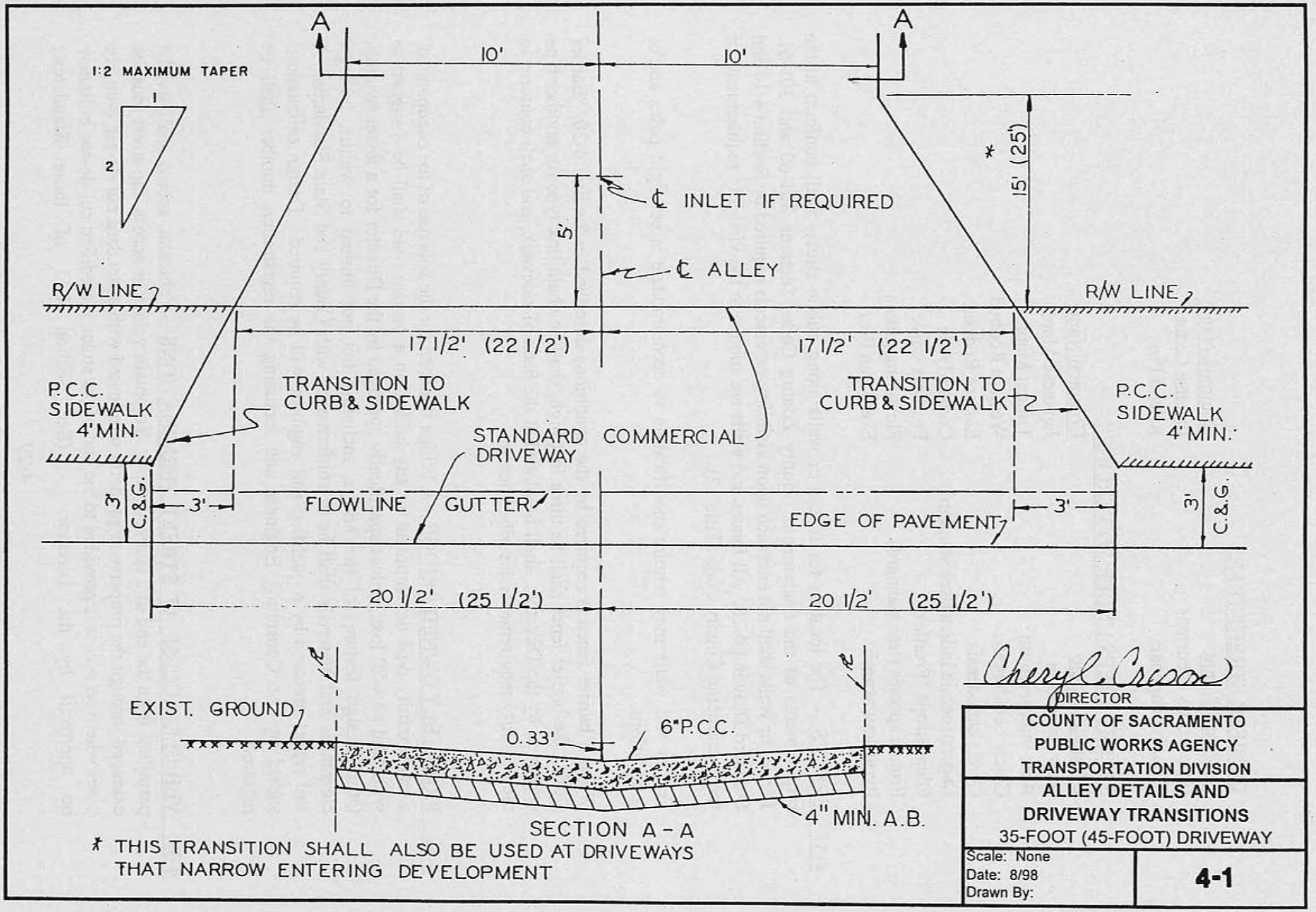

* THIS TRANSITION SHALL ALSO BE USED AT DRIVEWAYS THAT NARROW ENTERING DEVELOPMENT

Cheryl L. Creson
DIRECTOR

COUNTY OF SACRAMENTO PUBLIC WORKS AGENCY TRANSPORTATION DIVISION
ALLEY DETAILS AND DRIVEWAY TRANSITIONS 35-FOOT (45-FOOT) DRIVEWAY
Scale: None Date: 8/98 Drawn By: — 4-1

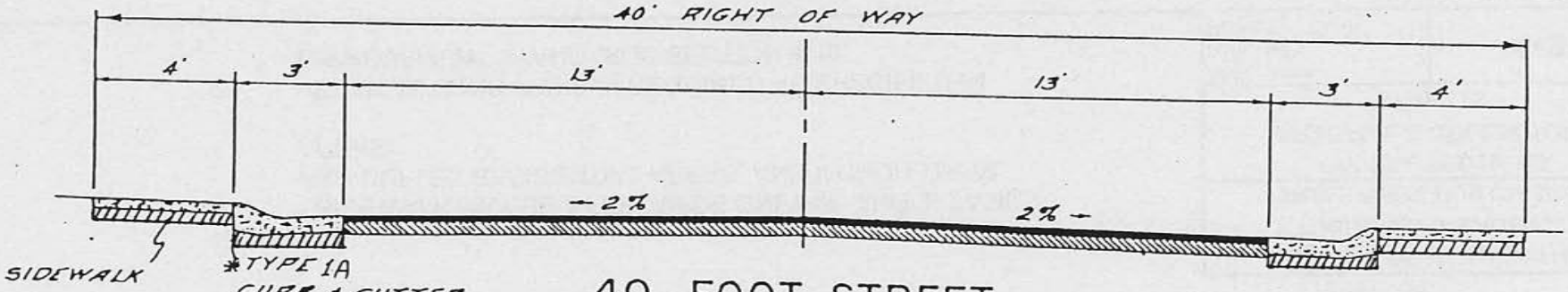

40 FOOT STREET
(MINOR RESIDENTIAL)

* TYPE 1 CURB & GUTTER MAY BE USED IN SINGLE FAMILY DEVELOPMENTS ON 40 FOOT AND 50 FOOT STREETS ONLY

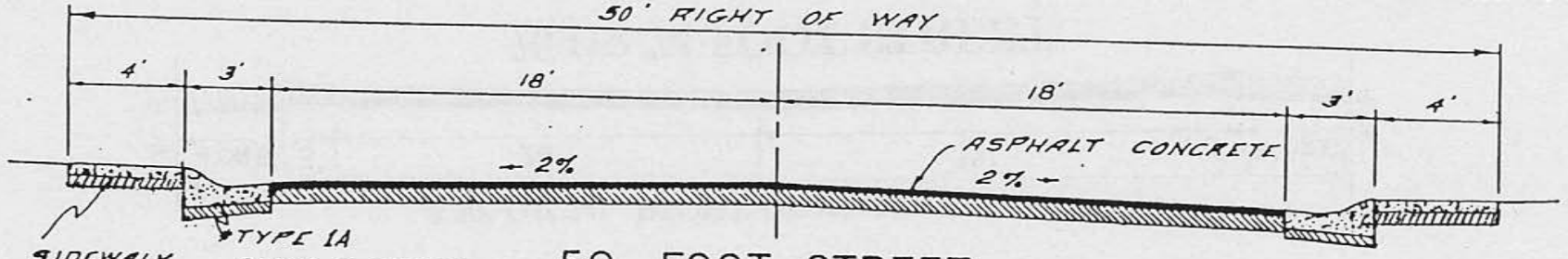

50 FOOT STREET
(PRIMARY RESIDENTIAL)

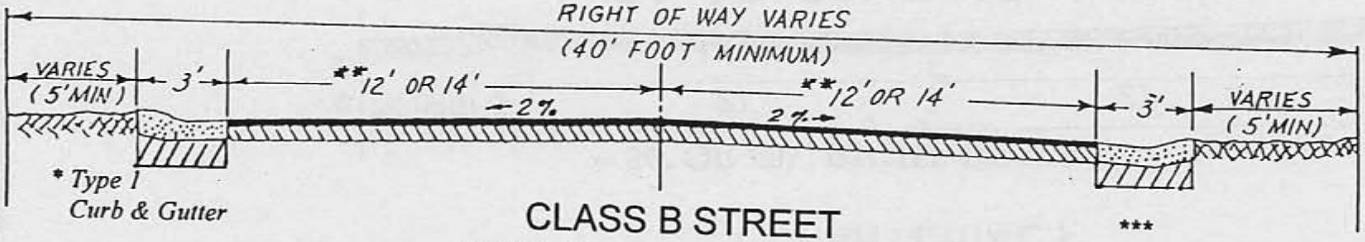

CLASS B STREET
FOR AR-1 ZONING ONLY

** 12' FOR 40' STREETS, 14' FOR 50' OR LARGER STREETS

*** SEE IMPROVEMENT STANDARDS SECTION 4-5 (B) FOR ALLOWABLE ALTERNATIVES TO CURB AND GUTTER

Cheryl Creson
DIRECTOR

COUNTY OF SACRAMENTO
PUBLIC WORKS AGENCY
TRANSPORTATION DIVISION

TYPICAL SECTIONS
RESIDENTIAL STREETS

Scale: None
Date: 8/98
Drawn By: T.L.U.

4-2

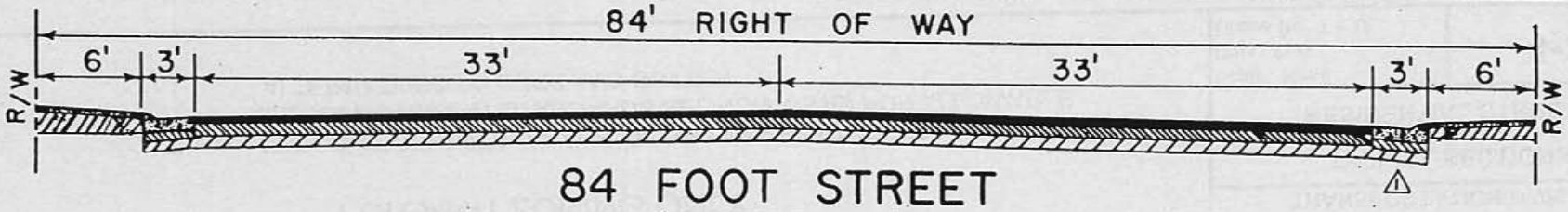

84 FOOT STREET
(ARTERIAL)

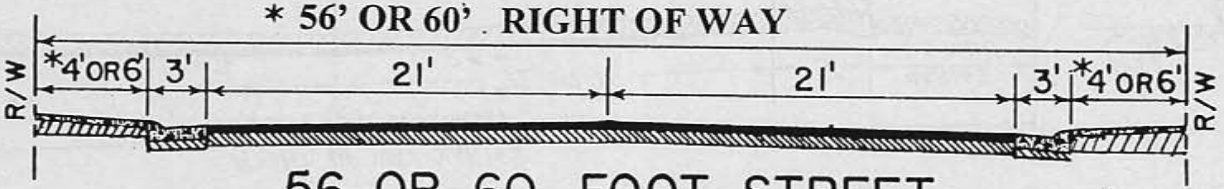

56 OR 60 FOOT STREET
(COLLECTOR)

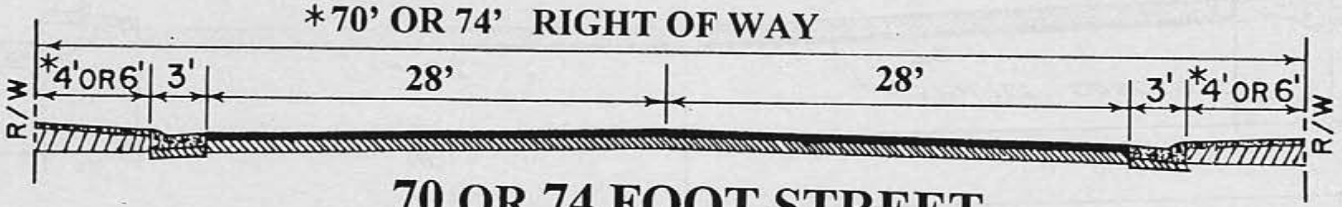

70 OR 74 FOOT STREET

Cheryl Creason
DIRECTOR

NOTES:

1. * SIDEWALK MAY BE 4 FEET WIDE ONLY IN SINGLE FAMILY AND DUPLEX RESIDENTIAL AREAS, AND IN INDUSTRIAL AREAS.

2. VERTICAL CURB (TYPE 2) REQUIRED AS SPECIFIED IN IMPROVEMENT STANDARDS SECTION 4-18.

COUNTY OF SACRAMENTO PUBLIC WORKS AGENCY TRANSPORTATION DIVISION
TYPICAL SECTIONS ARTERIAL & COLLECTOR STREETS

Scale: None Date: 8/98 Drawn By: T.L.U.	4-3

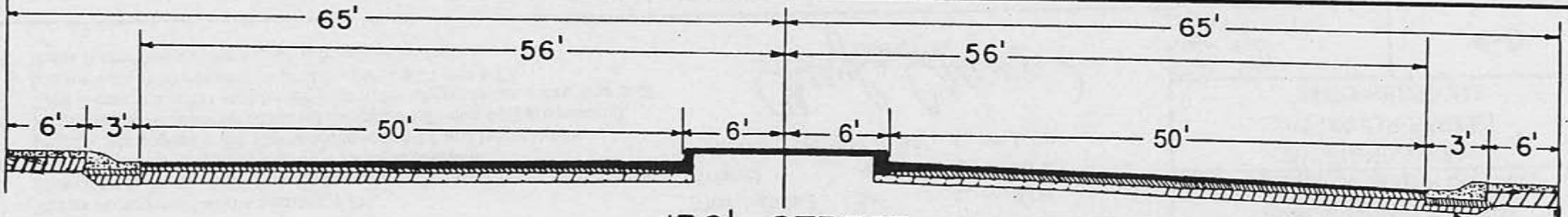

130' STREET
(SPECIAL THOROUGHFARE)

** TYPE IA ROLLED CURB & GUTTER

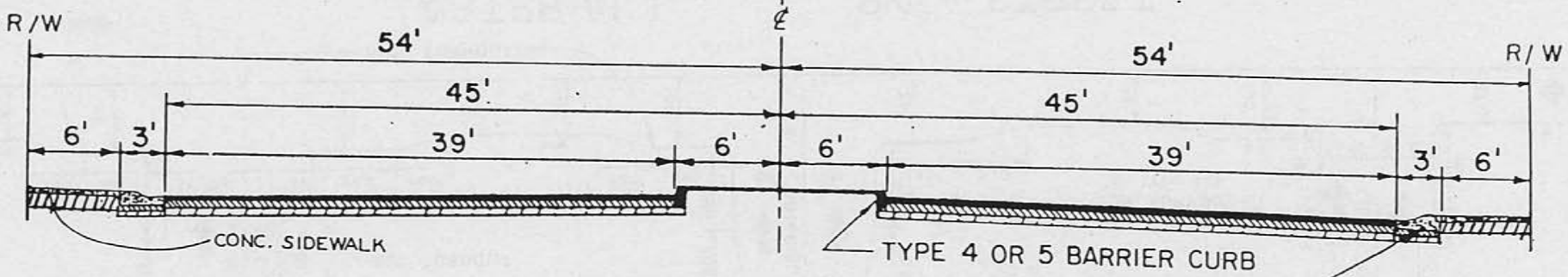

108' STREET
(THOROUGHFARE)

** TYPE IA ROLLED CURB & GUTTER

42', 54' OR 65' TO CENTERLINE
DEPENDING ON ADJACENT
STREET WIDTH

** TYPE 2 CURB & GUTTER REQUIRED AS SPECIFIED IN IMPROVEMENT STANDARDS SECTION 4-18.

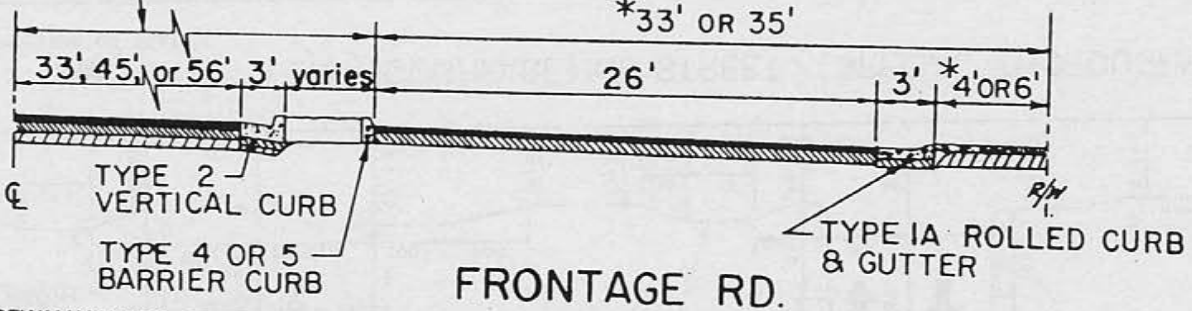

FRONTAGE RD.

* SIDEWALK MAY BE 4 FEET WIDE IN SINGLE FAMILY AND DUPLEX RESIDENTIAL AREAS ONLY.

FRONTAGE ROADS ADJACENT TO STATE FREEWAYS SHALL CONFORM TO THE FULL WIDTH STANDARDS FOR 56' AND 62' STREETS. SEE IMPROVEMENT STANDARDS SECTIONS 4-1(D) AND 4-3(N).

LEFT TURN POCKETS IN MEDIANS SHALL BE A MINIMUM OF 100' AT UNCONTROLLED ACCESS AND 180' AT SIGNALIZED ACCESS.

Cheryl Creson
DIRECTOR

COUNTY OF SACRAMENTO
PUBLIC WORKS AGENCY
TRANSPORTATION DIVISION

TYPICAL SECTIONS
SPECIAL THOROUGHFARE
THOROUGHFARE & FRONTAGE ROAD

Scale: None
Date: 8/98
Drawn By: T.L.U.

4-4

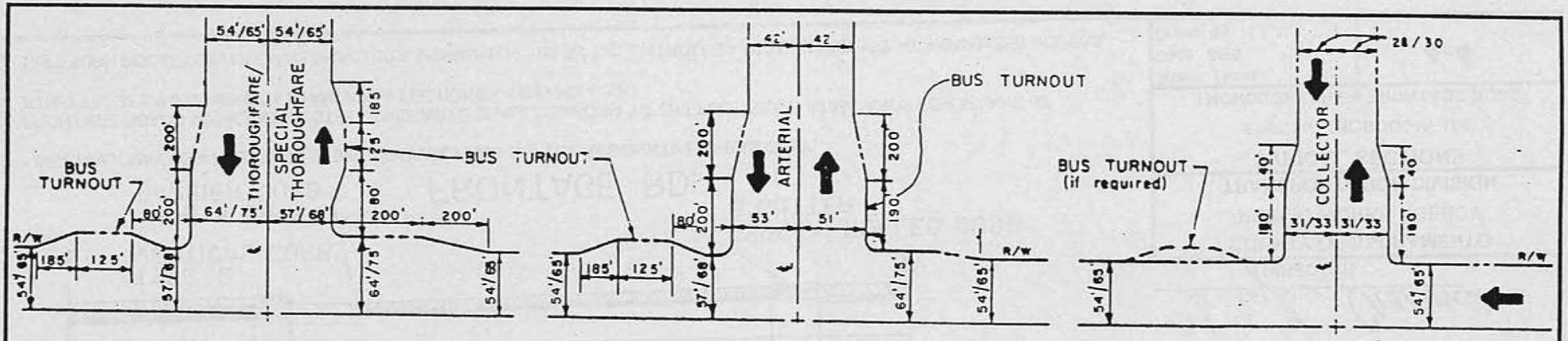

(THOROUGHFARE) 108' STREET / (SPECIAL THOROUGHFARE) 130' STREET

DIRECTION OF TRAFFIC

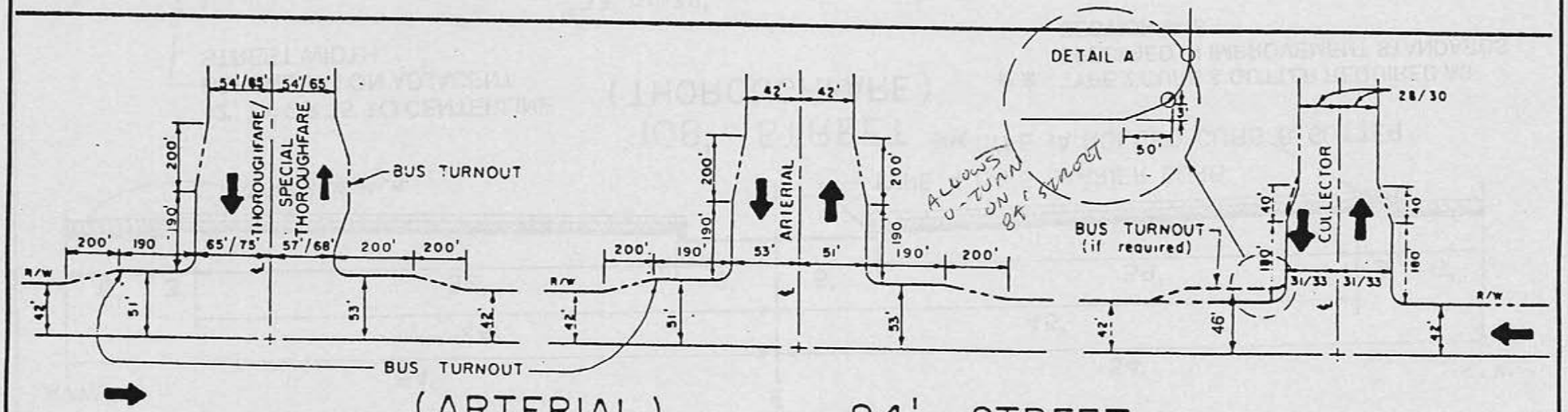

(ARTERIAL) 84' STREET

GENERAL NOTES:

1) Radius at corners of all intersections is 25'.
2) Widening not usually required at Collector/Collector and smaller intersections.
3) See Bus Turnout Standard Drawing 4-21 for dimensions.
4) Detail A also applies to 50' streets approaching 84' and larger streets
5) Pedestrian easements per Standard Drawings 4-21 and 4-23 are required.
6) Type 2 curb and gutter shall be required within all curb return areas, and at all bus turnouts as shown on Standard Drawings 4-21 and 4-22.
7) Detail A applies only where there is not a bus turnout.

STD. STREET WIDTHS

SPECIAL THOROUGHFARE	65'	℄ to R/W
Thoroughfare	54'	℄ to R/W
Arterial	42'	℄ to R/W
Collector	28', 30', or 35'	℄ to R/W

Cheryl Creson
DIRECTOR

COUNTY OF SACRAMENTO
PUBLIC WORKS AGENCY
TRANSPORTATION DIVISION

WIDENING DETAILS
AT MAJOR STREET
INTERSECTIONS

Scale: None
Date: 8/98
Drawn By: TLU

4-5

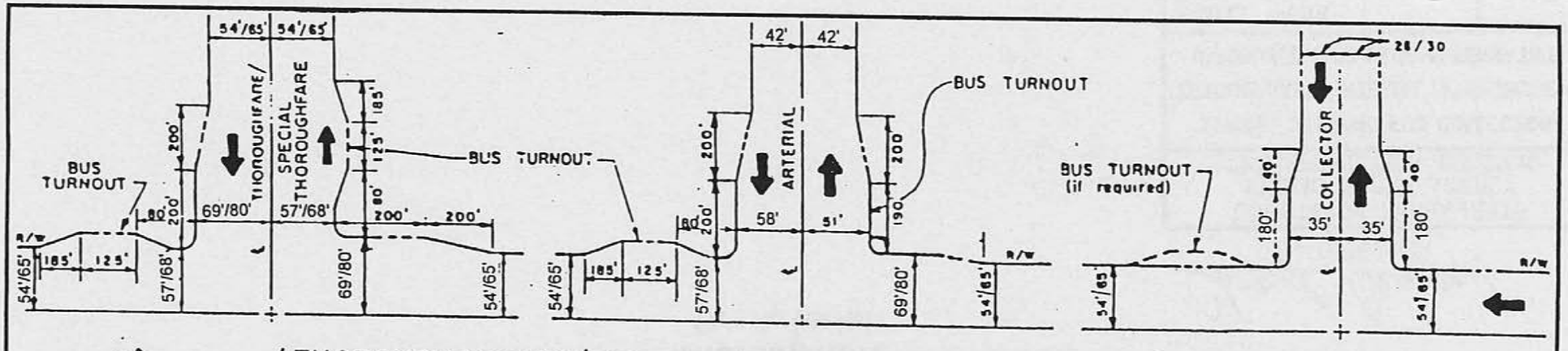

DIRECTION OF TRAFFIC

(THOROUGHFARE) 108' STREET / (SPECIAL THOROUGHFARE) 130' STREET

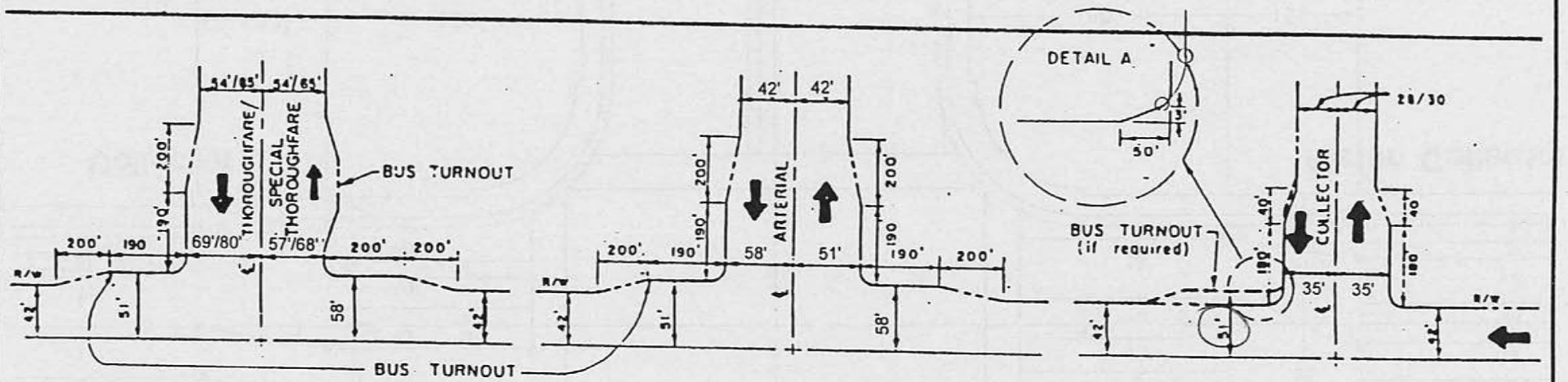

(ARTERIAL) 84' STREET

GENERAL NOTES:

1) Radius at corners of all intersections is 25'.
2) Widening not usually required at Collector/Collector and smaller intersections.
3) See Bus Turnout Standard Drawing 4-21 for dimensions.
4) Detail A also applies to 50' streets approaching 84' and larger streets
5) Pedestrian easements per Standard Drawings 4-21 and 4-23 are required.
6) Type 2 curb and gutter shall be required within all curb return areas, and at all bus turnouts as shown on Standard Drawings 4-21 and 4-22.
7) Detail A applies only where there is not a bus turnout.

STD. STREET WIDTHS

SPECIAL THOROUGHFARE	65'	℄ to R/W
Thoroughfare	54'	℄ to R/W
Arterial	42'	℄ to R/W
Collector	28', 30', or 35'	℄ to R/W

Cheryl Cresson
DIRECTOR

COUNTY OF SACRAMENTO
PUBLIC WORKS AGENCY
TRANSPORTATION DIVISION

WIDENING DETAILS AT MAJOR STREET INTERSECTIONS
(PROPOSED BIKE LANE ALTERNATIVE)

Scale: None
Date: 8/98
Drawn By: TLU

4-6

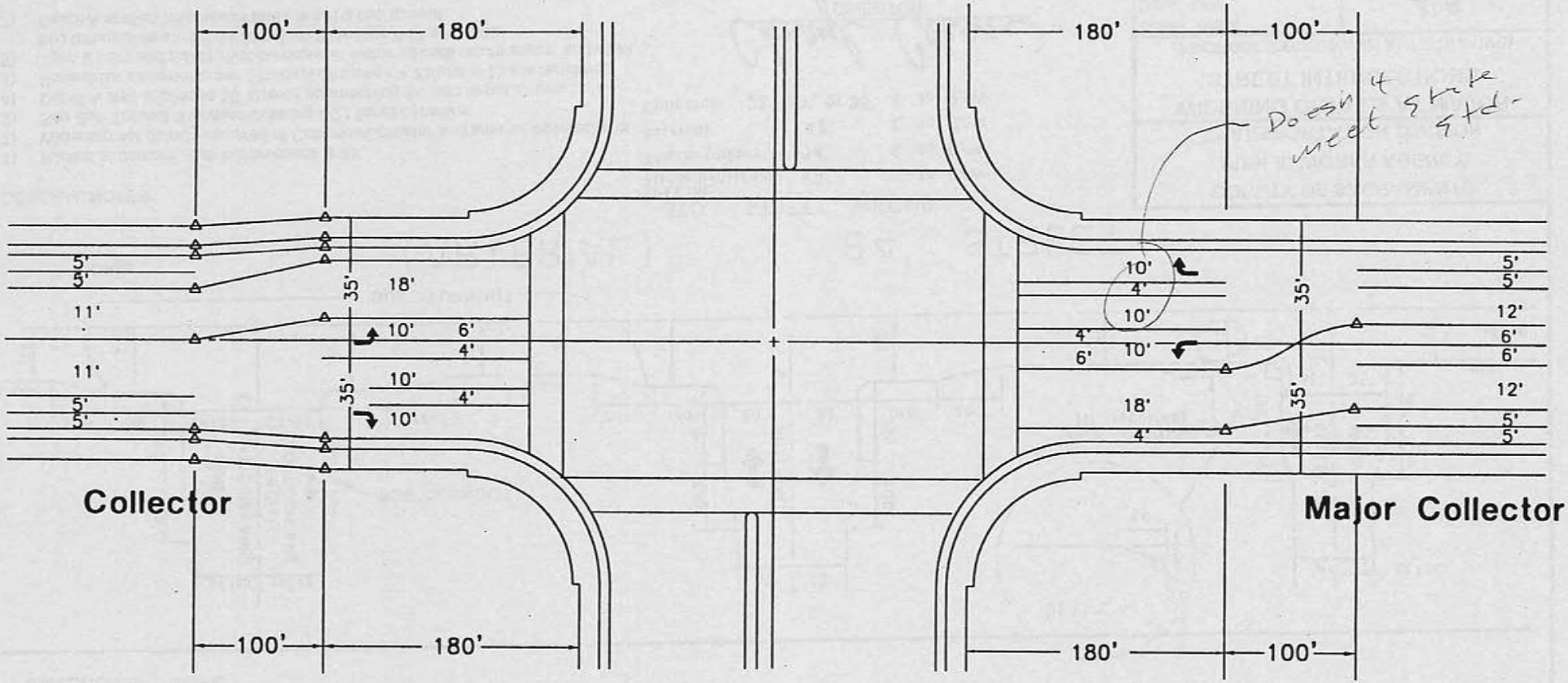

Cheryl Crozier
DIRECTOR

will be replaced

COUNTY OF SACRAMENTO
PUBLIC WORKS AGENCY
TRANSPORTATION DIVISION

TYPICAL STRIPING FOR COLLECTOR/ THROUGHFARE/ARTERIAL INTERSECTIONS (PROPOSED BIKE LANE ALTERNATIVE)

SCALE: NONE
DATE: 5/87
DRAWN BY: SW

4-7

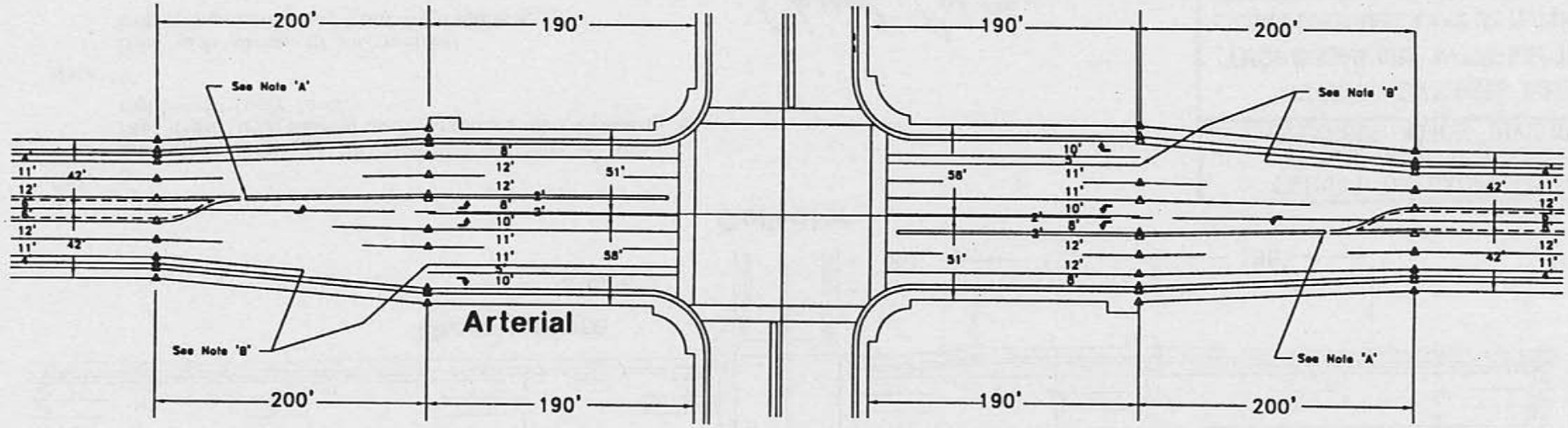

Arterial

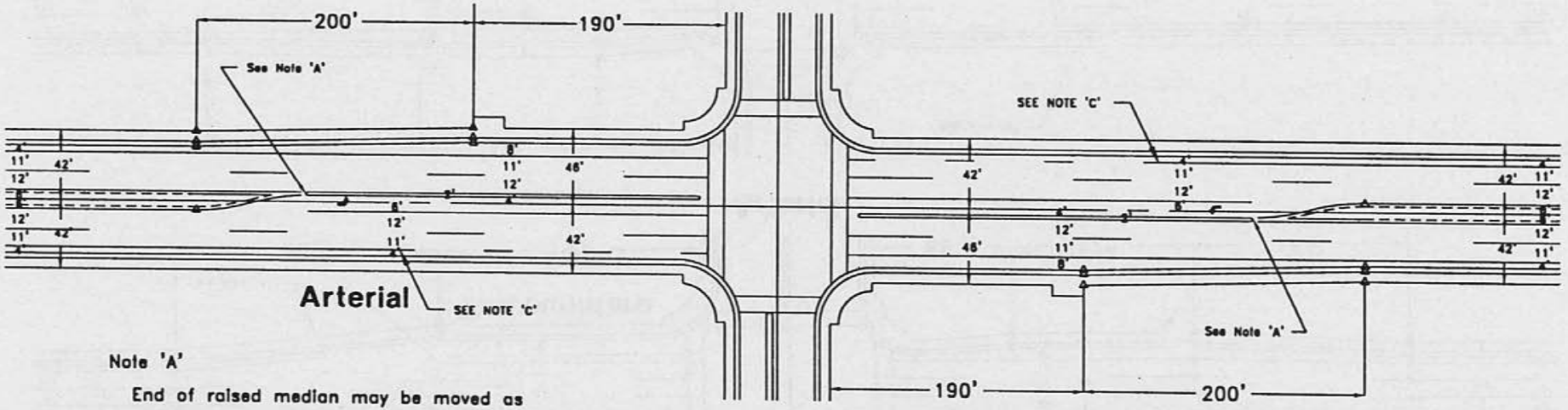

Collector

Note 'A'

End of raised median may be moved as necessary for driveway locations.
See Improvement Standard Section 4-10 (J)

Note 'B'

Bikelane stripe to be discontinued 290 to 350 feet from intersection and resumed at beginning right-turn-only lane.

Note 'C'

Bikelane striping to be dashed beginning 200 feet from intersection.

Cheryl Creson
DIRECTOR

COUNTY OF SACRAMENTO
PUBLIC WORKS AGENCY
TRANSPORTATION DIVISION

TYPICAL STRIPING FOR ARTERIAL INTERSECTIONS

(PROPOSED BIKE LANE ALTERNATIVE)

SCALE: NONE
DATE: 5/87
DRAWN BY: SW

4-8

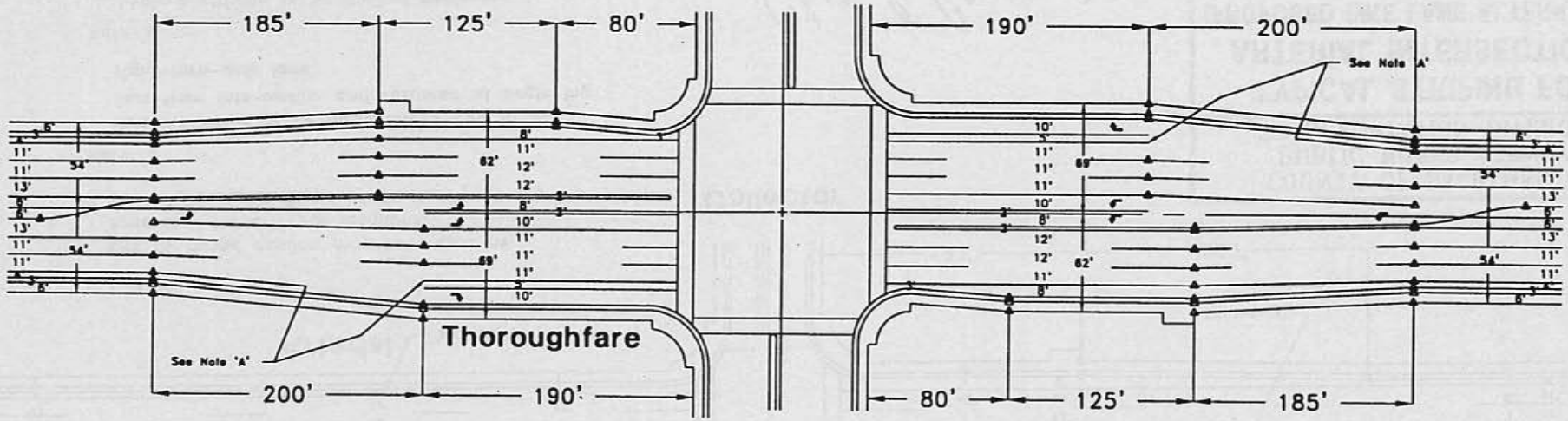

Arterial

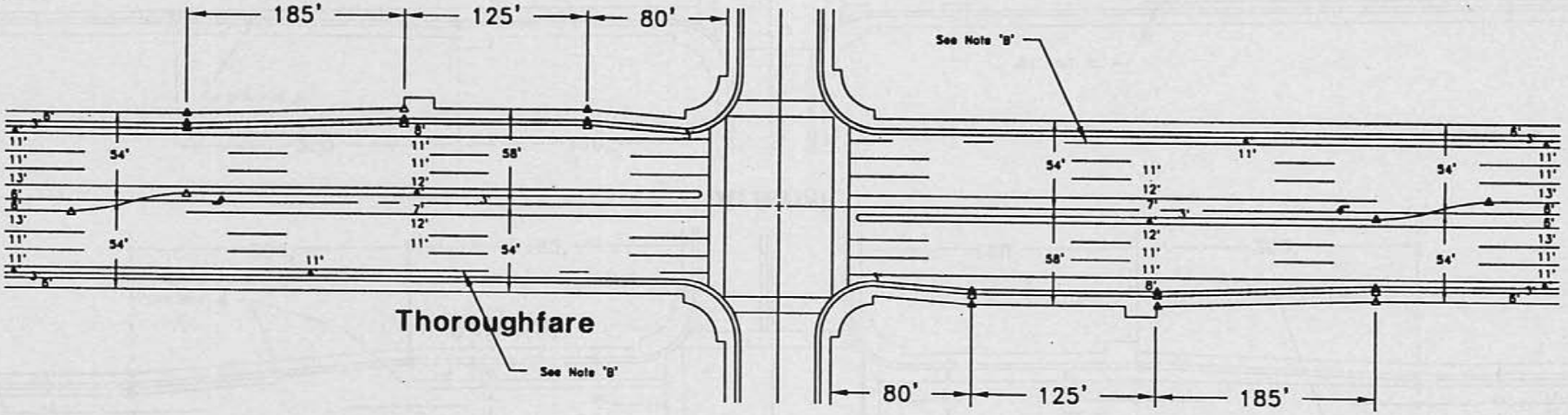

Collector

Note 'A'

Bike lane stripe to be discontinued 290 to 350 feet from intersection and resumed at beginning of right-turn-only lane.

Note 'B'

Bike lane stripe to be dashed beginning 200 feet from intersection.

Cheryl Creason
DIRECTOR

COUNTY OF SACRAMENTO
PUBLIC WORKS AGENCY
TRANSPORTATION DIVISION

TYPICAL STRIPING FOR THOROUGHFARE INTERSECTIONS
(PROPOSED BIKE LANE ALTERNATIVE)

SCALE: NONE
DATE: 5/87
DRAWN BY: SW

4-9

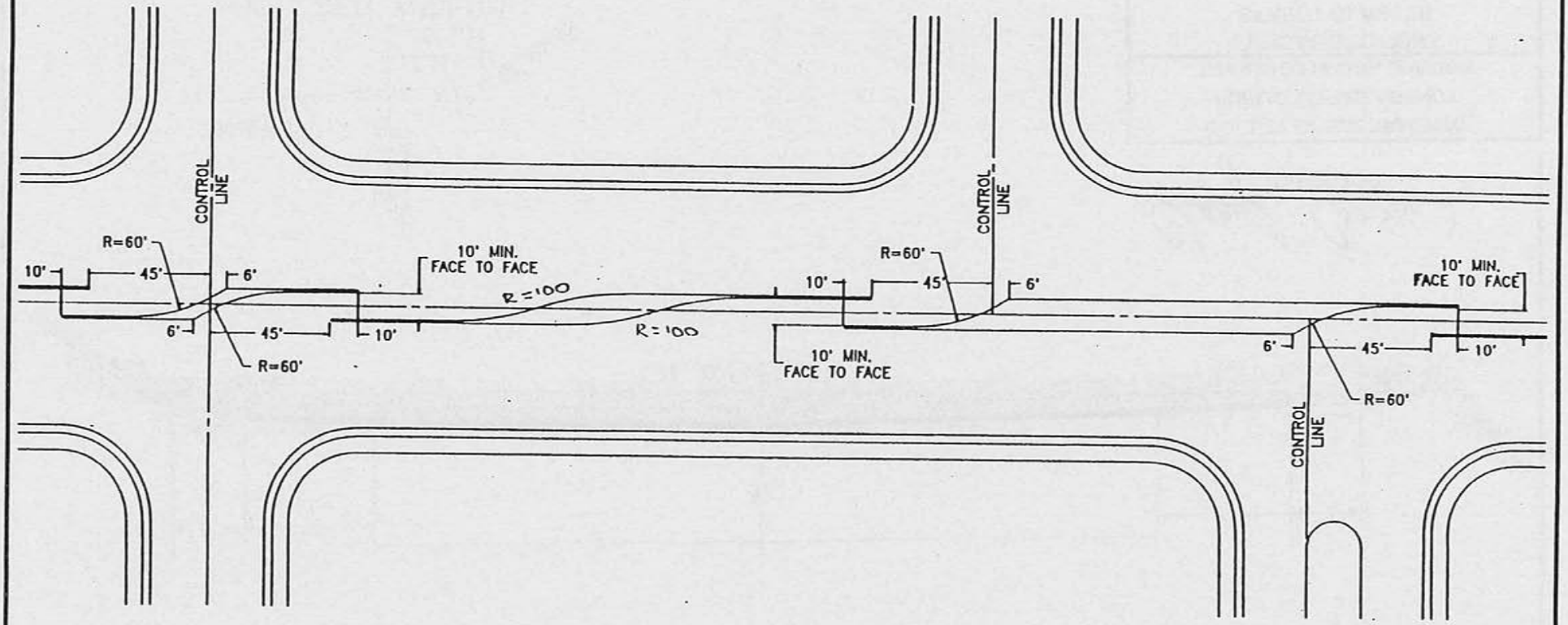

Cheryl Creson
DIRECTOR

COUNTY OF SACRAMENTO PUBLIC WORKS AGENCY TRANSPORTATION DIVISION	
TYPICAL RAISED ISLAND DESIGNS FOR LIMITING ACCESS	
Scale: None. Date: 8/98 Drawn By: TLU	4-10

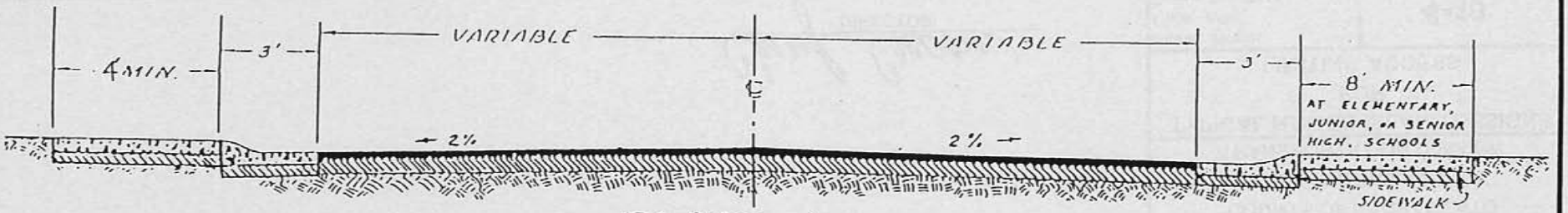

CLASS A

CLASS B

SAME AS CLASS A - EXCEPT SIDEWALKS MAY BE OMITTED

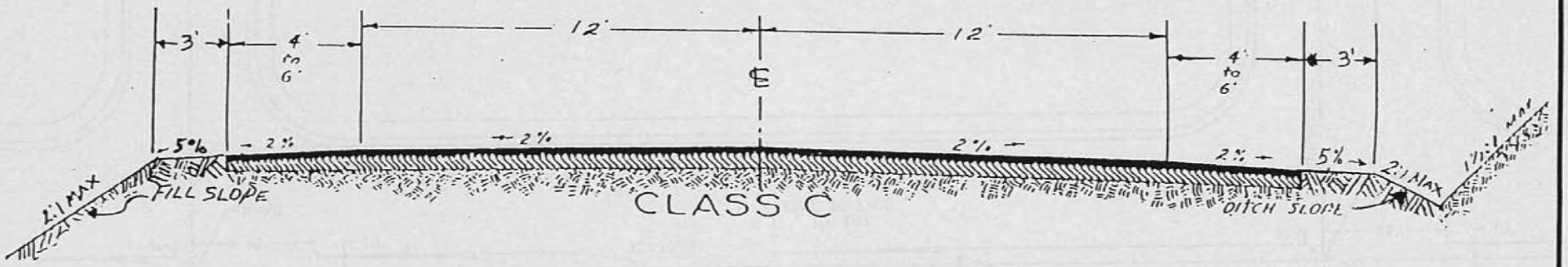

CLASS C

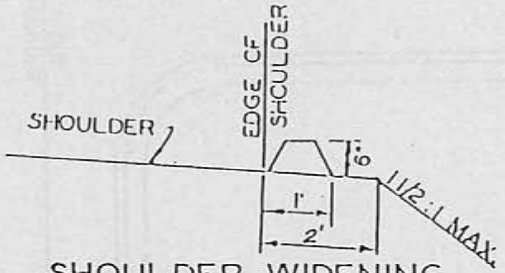

SHOULDER WIDENING
WITH A.C. DIKE

Cheryl Creson
DIRECTOR

COUNTY OF SACRAMENTO PUBLIC WORKS AGENCY TRANSPORTATION DIVISION	
TYPICAL SECTIONS STREET CLASSES "A", "B" & "C"	
Scale: None Date: 8/98 Drawn By:	4-11

84 FOOT, 108 FOOT OR 130 FOOT STREETS

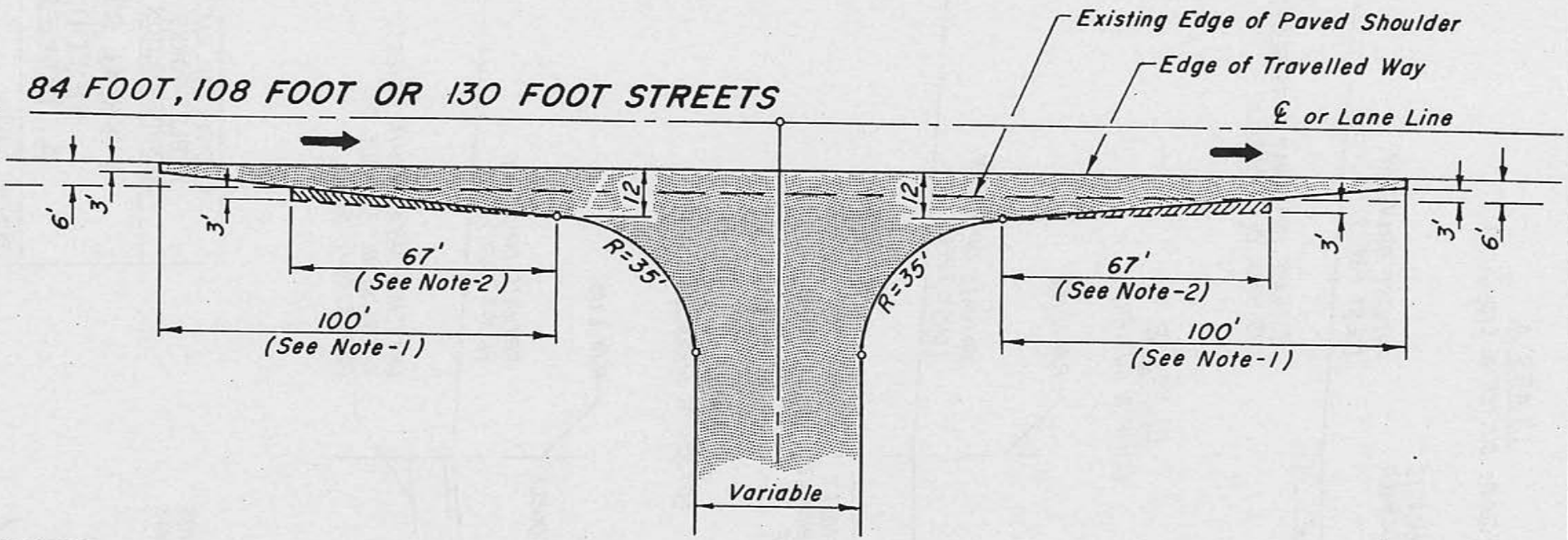

NOTES:

1. Use 100' Pavement Taper Section when Major Street Shoulder is unpaved or seal coated.
2. Use 67' Pavement Taper Section when Major Street Shoulder is fully paved.
3. Full Roadbed Structural Section to be placed in accordance with County Standards for Area to be paved.
4. Pavement Taper Section may be deleted on Minor Streets.

Cheryl Creson
DIRECTOR

COUNTY OF SACRAMENTO
PUBLIC WORKS AGENCY
TRANSPORTATION DIVISION

CLASS "C"
STREET INTERSECTION

Scale: None
Date: 8/98
Drawn By: T.L.U.

4-12

CLASS A
(CURB, GUTTER & SIDEWALK)

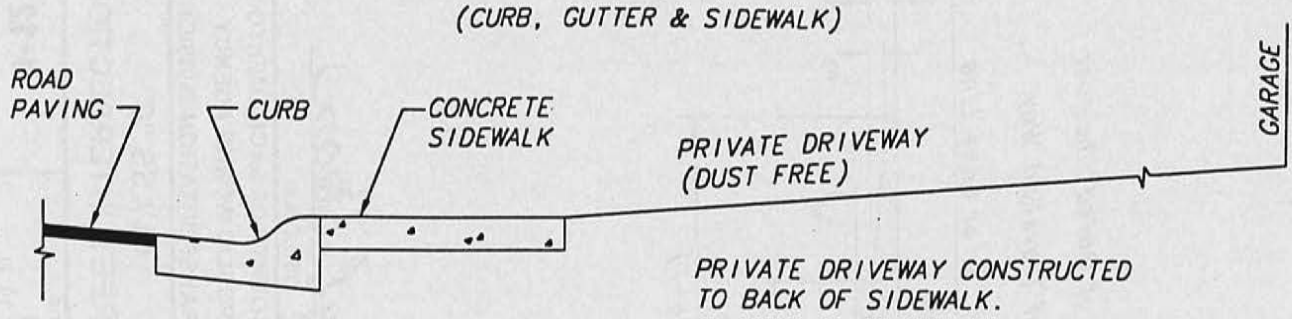

CLASS B
(CURB & GUTTER)

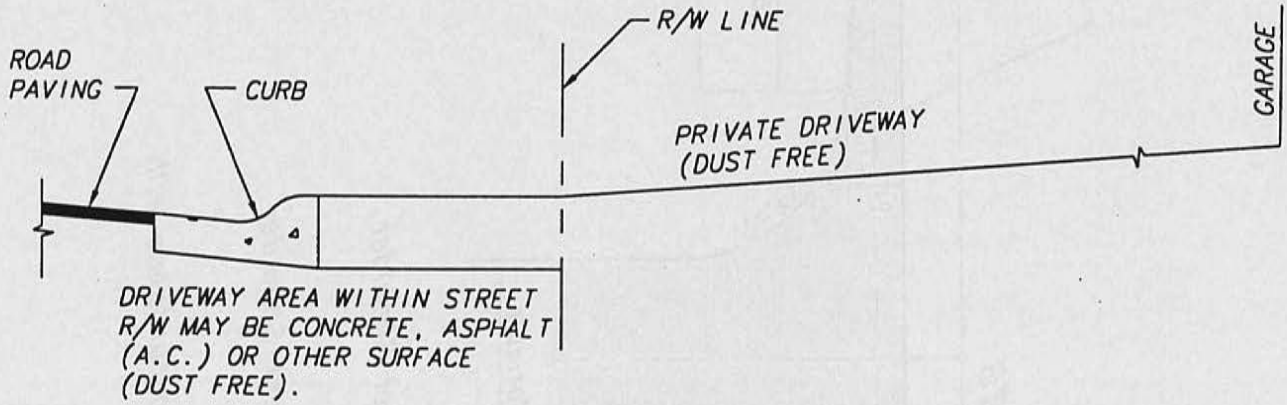

CLASS C
(DITCH OR SHOULDER)

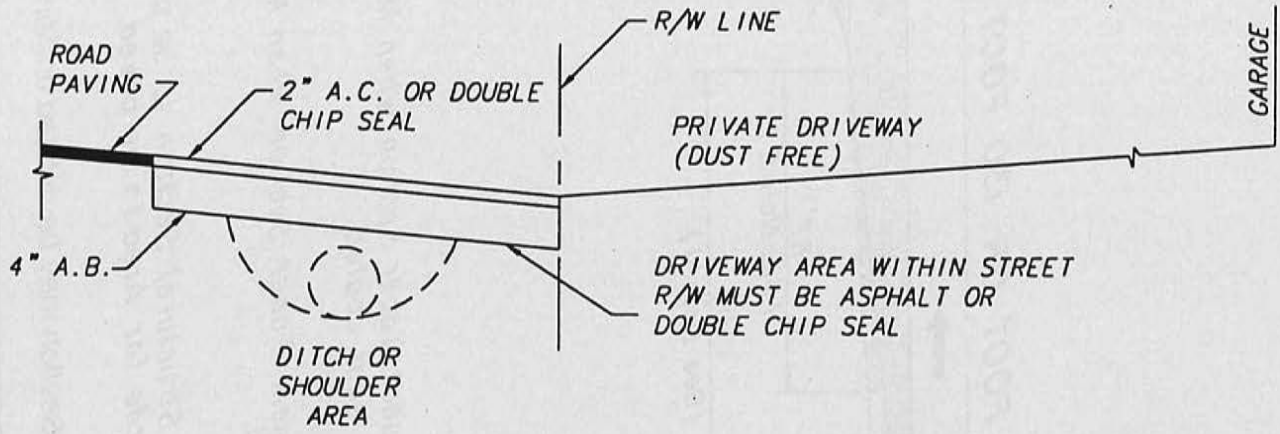

NOTE: SEE IMPROVEMENT STANDARDS SECTION 4-10 FOR DRIVEWAY REQUIREMENTS.

Cheryl Crosa
DIRECTOR

COUNTY OF SACRAMENTO
PUBLIC WORKS AGENCY
TRANSPORTATION DIVISION

TYPICAL STREET SECTIONS AT DRIVEWAYS

SCALE: NONE
DATE: 8/98
DRAWN BY:

4-13

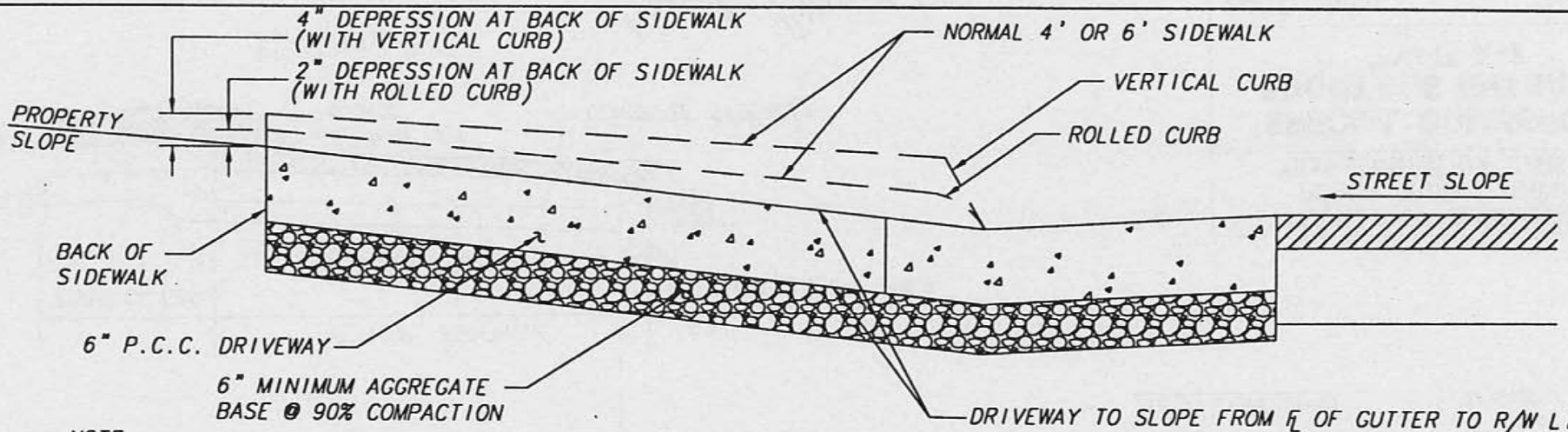

NOTE:
THE PROPERTY SLOPE FOR THE FIRST 20' FROM THE BACK OF THE SIDEWALK MUST BE DESIGNED SO THAT THE ALGERBRAIC DIFFERENCE OF THE PROPERTY SLOPE AND STREET SLOPE WILL NOT EXCEED 7% WITH VERTICAL CURB AND 10% WITH ROLLED CURB. IF PROPERTY SLOPE IS NEGATIVE, IT IS NOT TO EXCEED 5% FOR THE FIRST 20' FROM THE BACK OF THE SIDEWALK.

TYPICAL DRIVEWAY SECTION

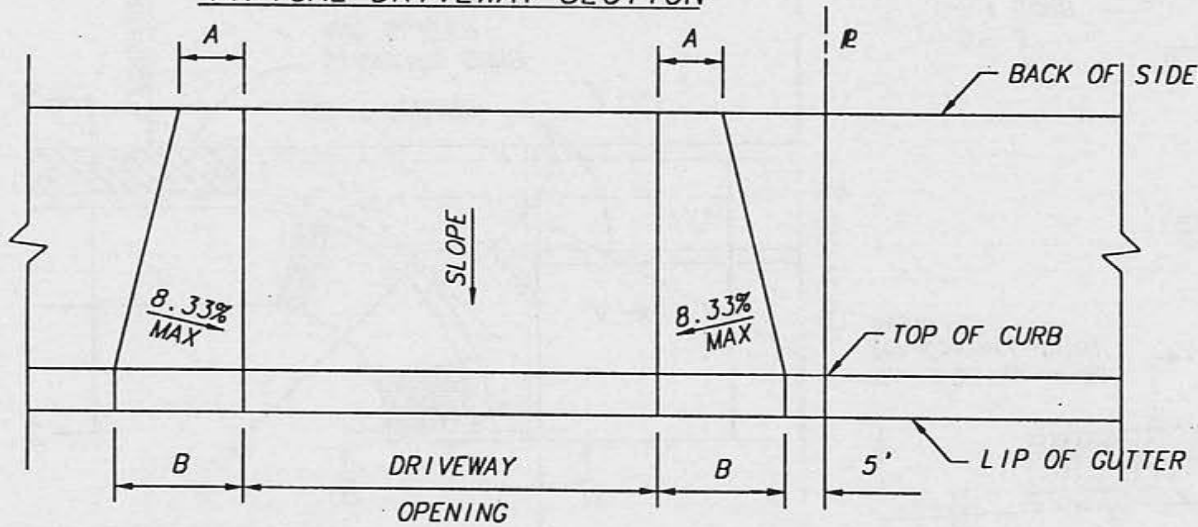

NOTE:
FOR CURB HEIGHT OTHER THAN STANDARD, THE MAXIMUM 8.33% SLOPE CONTROLS TRANSITION LENGTH A AND B.

	TRANSITION	
CURB TYPE	A	B
ROLLED	2'	4'
VERTICAL	4'	6'

Cheryl Creson
DIRECTOR

COUNTY OF SACRAMENTO
PUBLIC WORKS AGENCY
TRANSPORTATION DIVISION

COMMERCIAL DRIVEWAYS TYPE A-6

SCALE: NONE
DATE: 8/98
DRAWN BY:

4-14

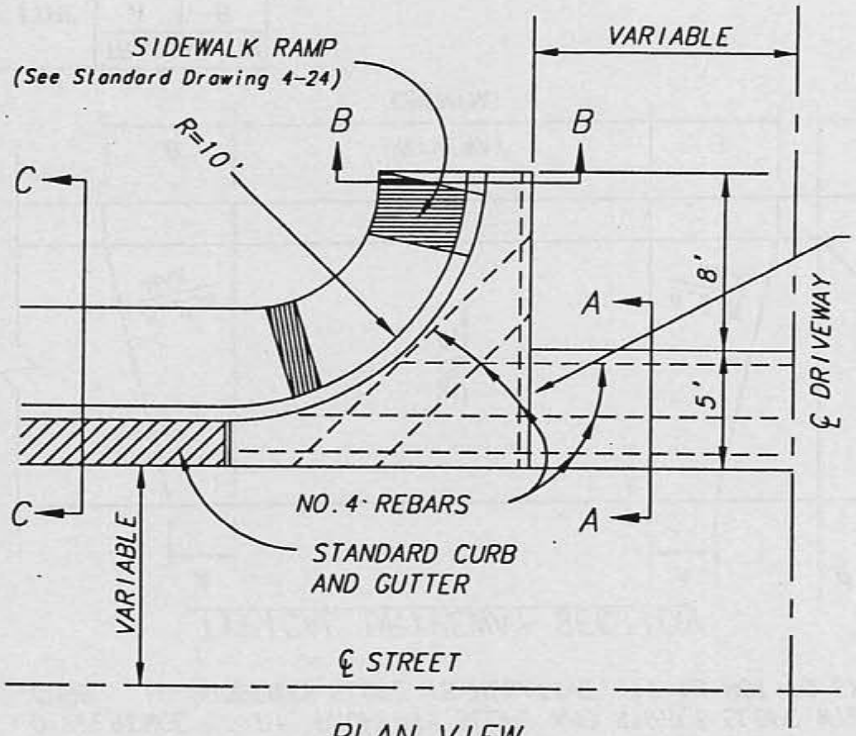

PLAN VIEW

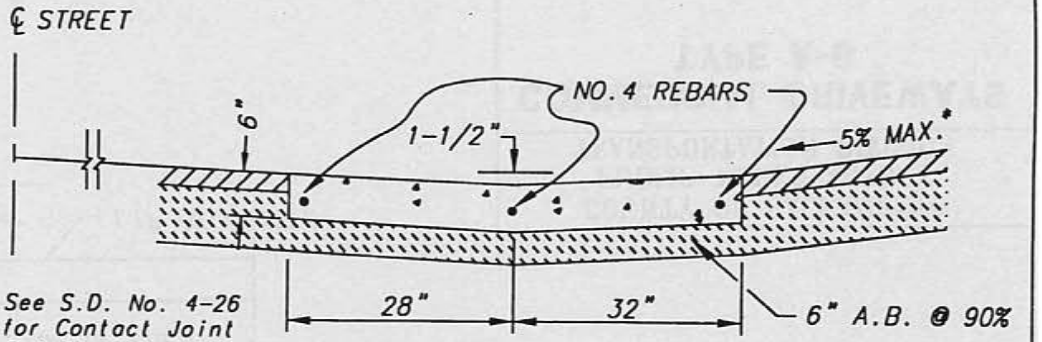

SECTION A-A

* Driveway slope not to exceed 5% for a minimum of 20' from edge of pavement.

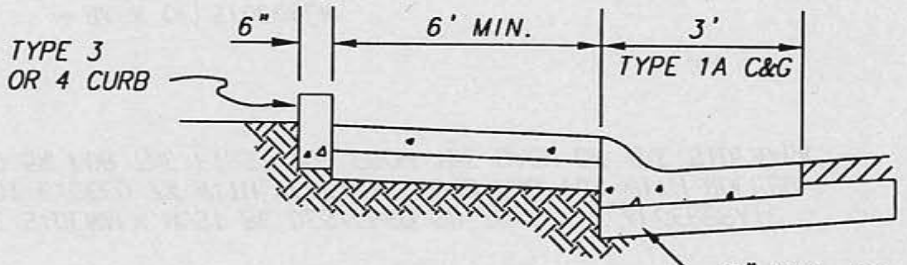

SECTION B-B

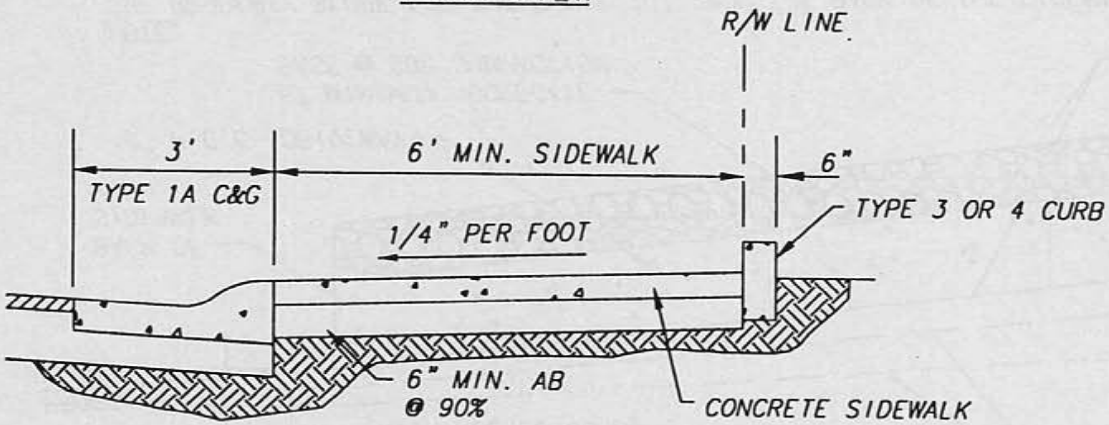

SECTION C-C

Cheryl Creson
DIRECTOR

COUNTY OF SACRAMENTO
PUBLIC WORKS AGENCY
TRANSPORTATION DIVISION

SPECIAL COMMERCIAL FRONTAGE ENTRANCE TYPE A-7

SCALE: NONE
DATE: 8/98
DRAWN BY:

4-15

FRONTAGE (Each Street)	MAXIMUM NUMBER OF DRIVEWAYS
UNDER 200'	ONE STD DRIVEWAY
OVER 200'	TWO DRIVEWAYS OR MEET APPROVAL OF THE DIRECTOR.

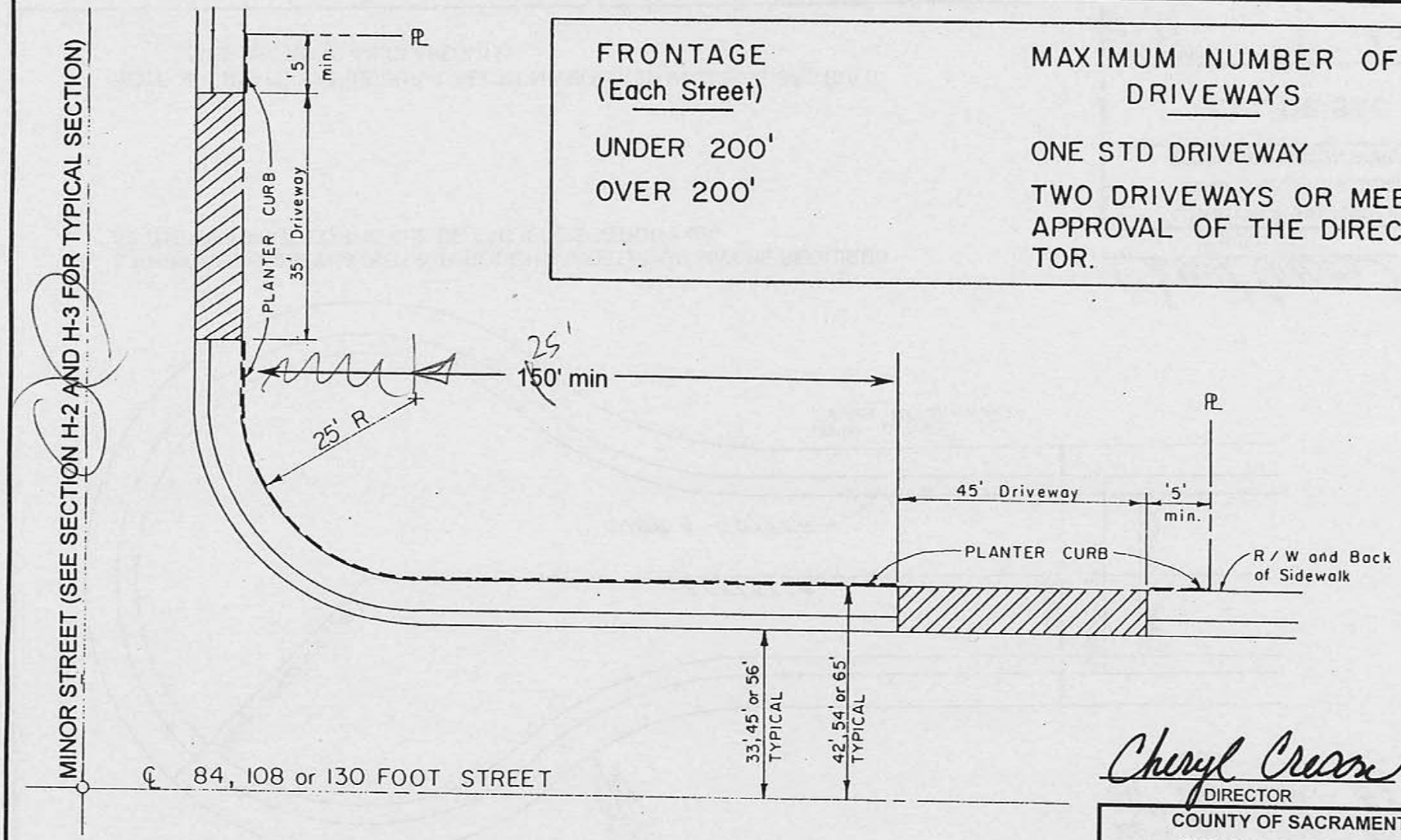

Note: DRIVEWAYS ON 84', 108', AND 130' STREETS SHALL HAVE A MINIMUM CLEAR SPACING OF 150 FEET. LESSER SPACING MAY BE APPROVED BY THE DIRECTOR FOR UNAVOIDABLE, EXTREME CONDITIONS, ON SMALL LOTS WHERE A MINIMUM OF ONE DRIVEWAY PER STREET FRONTAGE WILL BE PROVIDED.

Cheryl Crean
DIRECTOR

COUNTY OF SACRAMENTO
PUBLIC WORKS AGENCY
TRANSPORTATION DIVISION

COMMERCIAL FRONTAGE AND DRIVEWAY REGULATIONS

Scale: None
Date: 8/98
Drawn By:

4-16

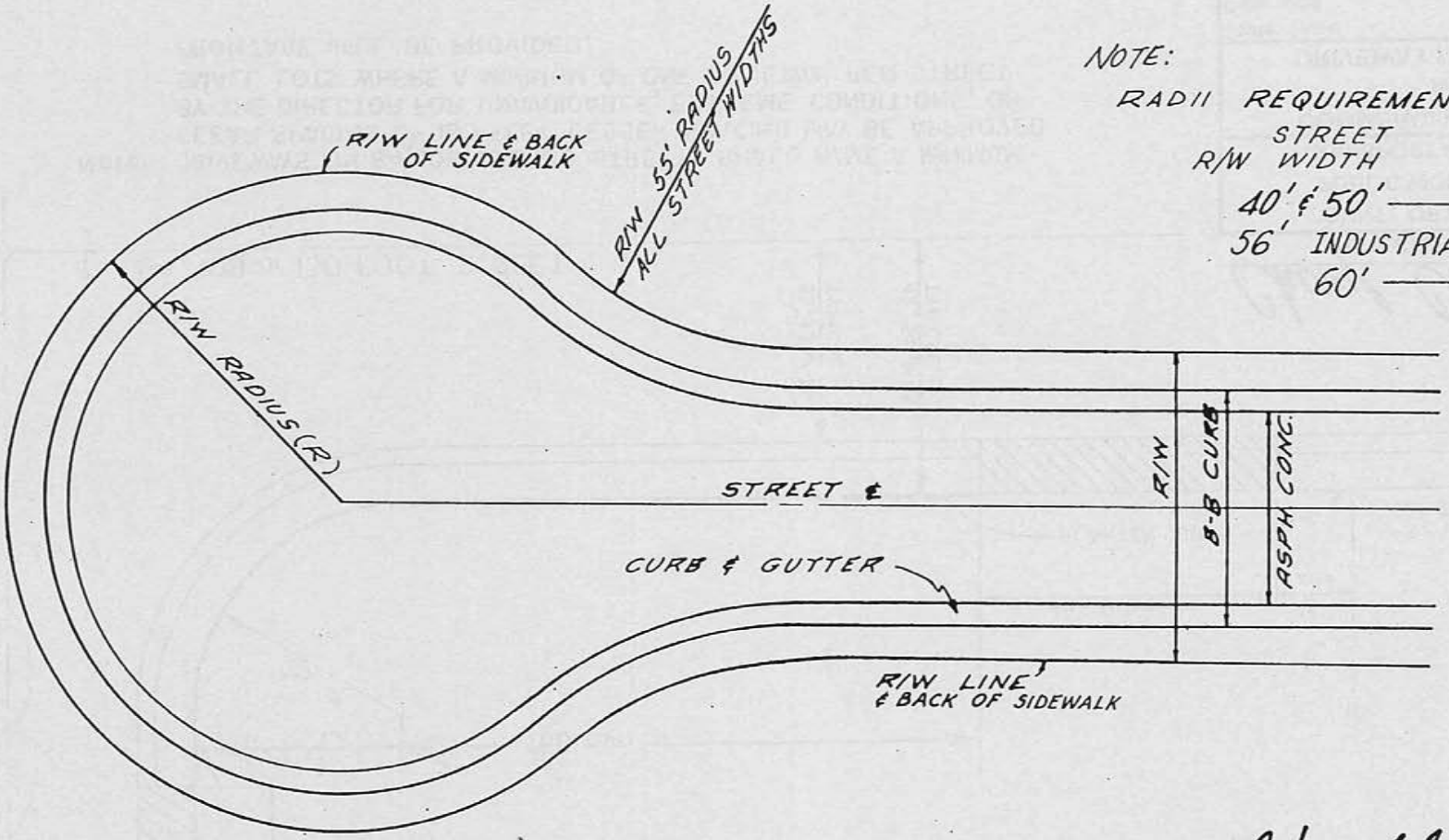

NOTE:

RADII REQUIREMENTS

STREET R/W WIDTH	(R)
40' & 50'	40'
56' INDUSTRIAL	54'
60'	56'

A STANDARD CODE W53 (NOT A THROUGH STREET) SIGN MAY BE REQUIRED AT THE ENTRANCE TO THE CUL-DE-SAC (SEE SECTION 4-28).

NOTE: INCREASED STRUCTURAL SECTION REQUIRED IN CUL-DE-SAC BULB (SEE SECTIONS 4-6(C) AND 4-11)

Cheryl Creson
DIRECTOR

COUNTY OF SACRAMENTO
PUBLIC WORKS AGENCY
TRANSPORTATION DIVISION

CUL-DE-SAC

Scale: None
Date: 8/98
Drawn By:

4-17

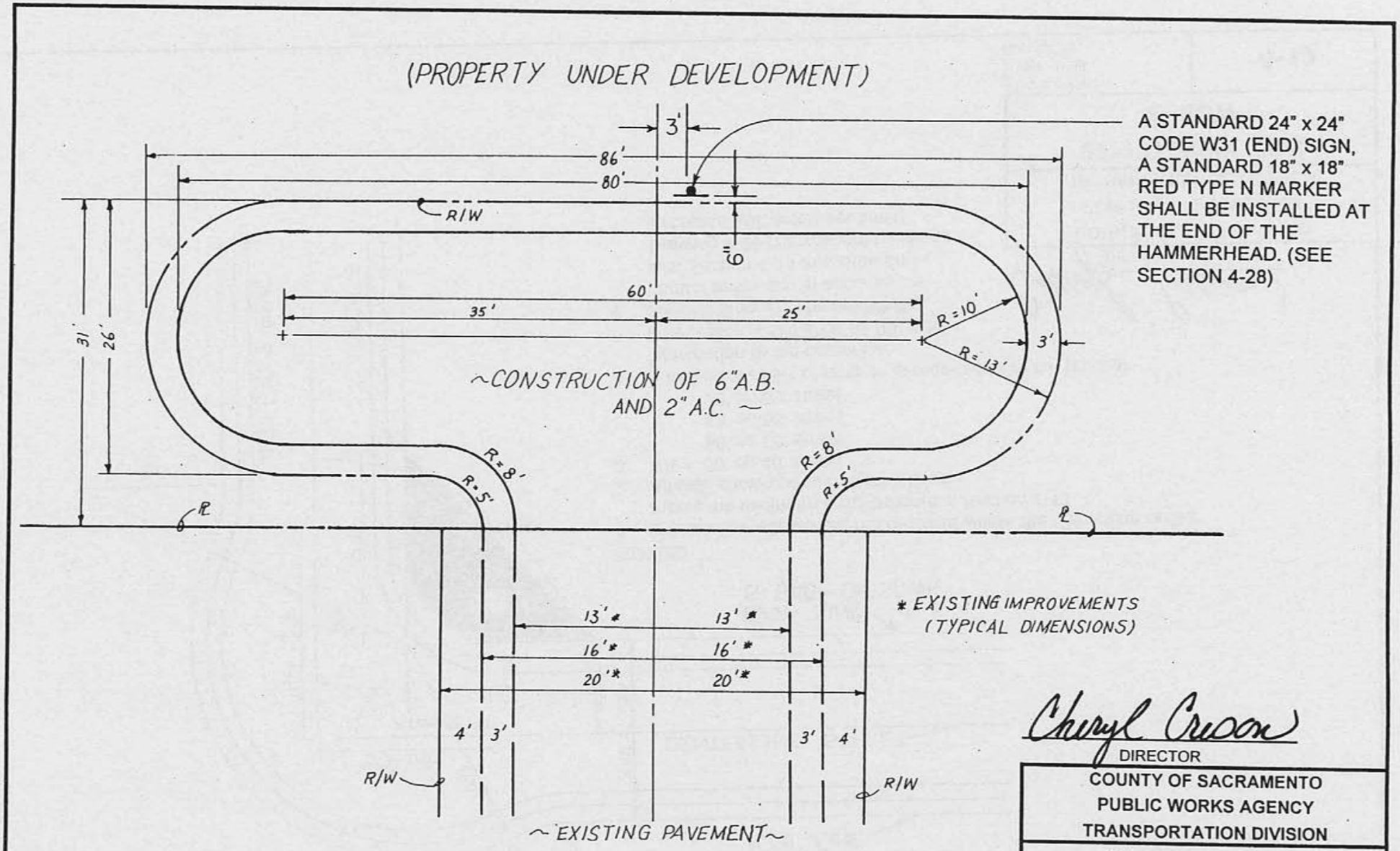

A STANDARD 24" x 24" CODE W31 (END) SIGN, A STANDARD 18" x 18" RED TYPE N MARKER SHALL BE INSTALLED AT THE END OF THE HAMMERHEAD. (SEE SECTION 4-28)

NOTE: NO ACCESS ALLOWED OFF HAMMER-HEAD BULB

Cheryl Creson
DIRECTOR

COUNTY OF SACRAMENTO
PUBLIC WORKS AGENCY
TRANSPORTATION DIVISION

HAMMER - HEAD DESIGN

Scale: None
Date: 8/98
Drawn By:

4-18

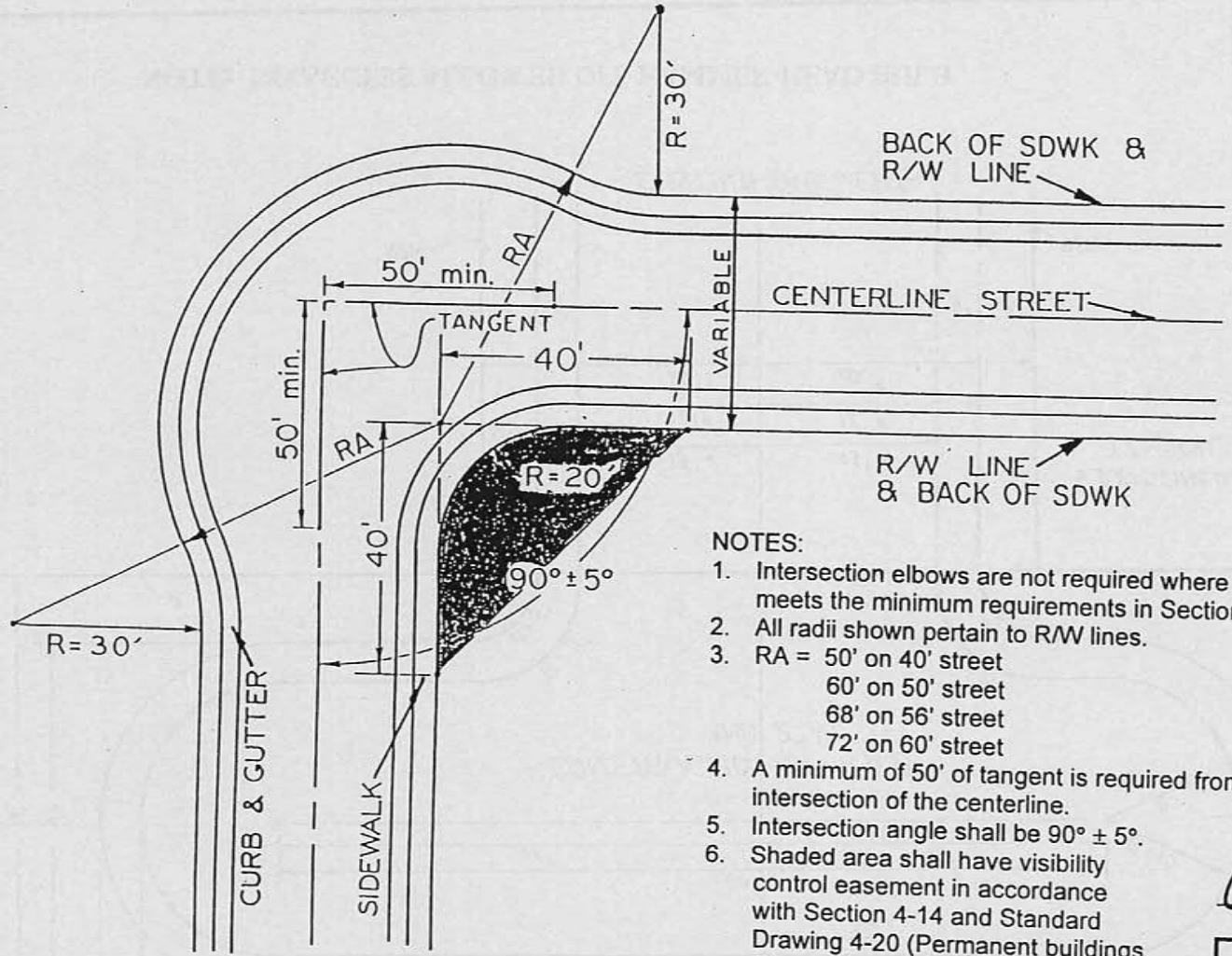

NOTES:

1. Intersection elbows are not required where the Centerline radius meets the minimum requirements in Section 4-13.
2. All radii shown pertain to R/W lines.
3. RA = 50' on 40' street
   60' on 50' street
   68' on 56' street
   72' on 60' street
4. A minimum of 50' of tangent is required from the point of intersection of the centerline.
5. Intersection angle shall be 90° ± 5°.
6. Shaded area shall have visibility control easement in accordance with Section 4-14 and Standard Drawing 4-20 (Permanent buildings Excepted within setback lines)

Cheryl Creson

DIRECTOR

COUNTY OF SACRAMENTO
PUBLIC WORKS AGENCY
TRANSPORTATION DIVISION

90° INTERSECTION ELBOW

Scale: None
Date: 8/98
Drawn By:

4-19

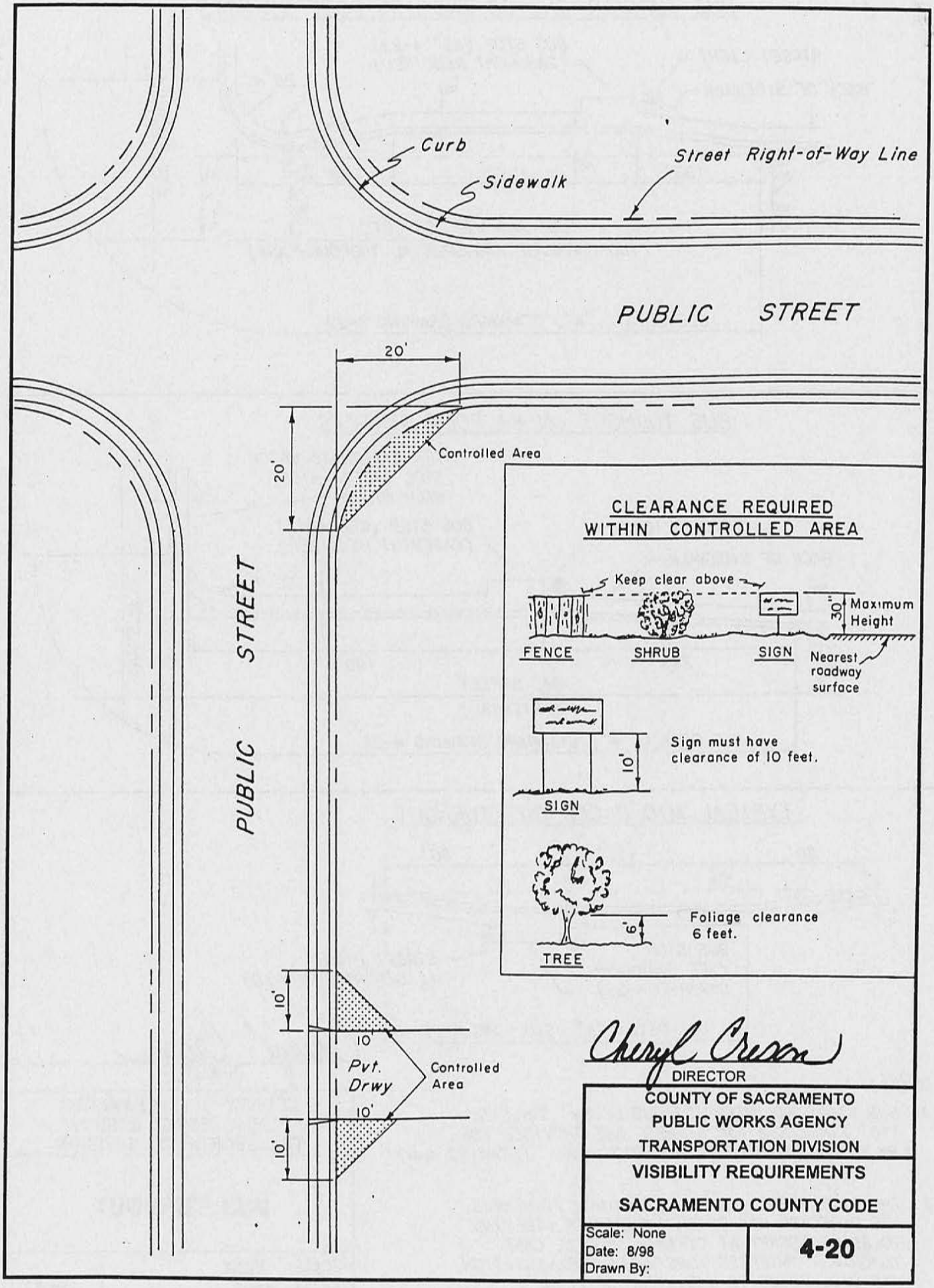

Cheryl Creson
DIRECTOR

COUNTY OF SACRAMENTO PUBLIC WORKS AGENCY TRANSPORTATION DIVISION
VISIBILITY REQUIREMENTS SACRAMENTO COUNTY CODE
Scale: None Date: 8/98 Drawn By: — 4-20

BUS TURNOUT ON 108 AND 130 FOOT STREETS

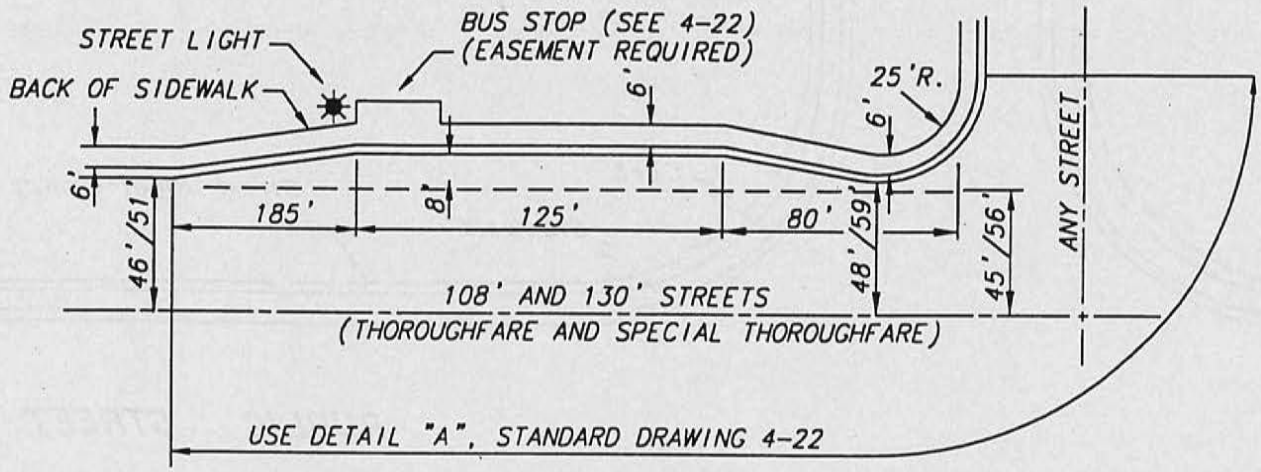

BUS TURNOUT ON 84 FOOT STREETS

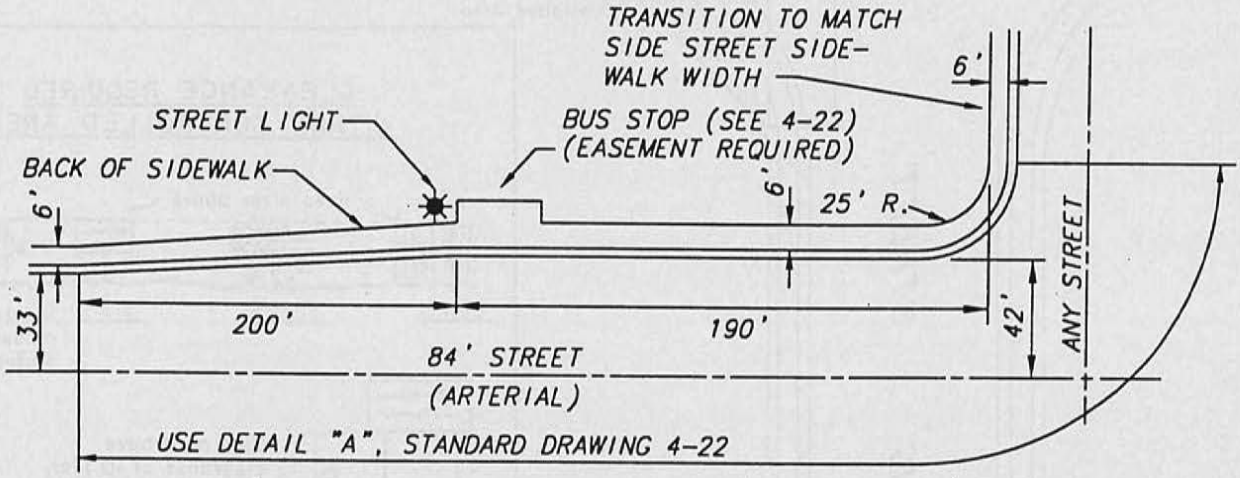

TYPICAL MID-BLOCK BUS TURNOUT

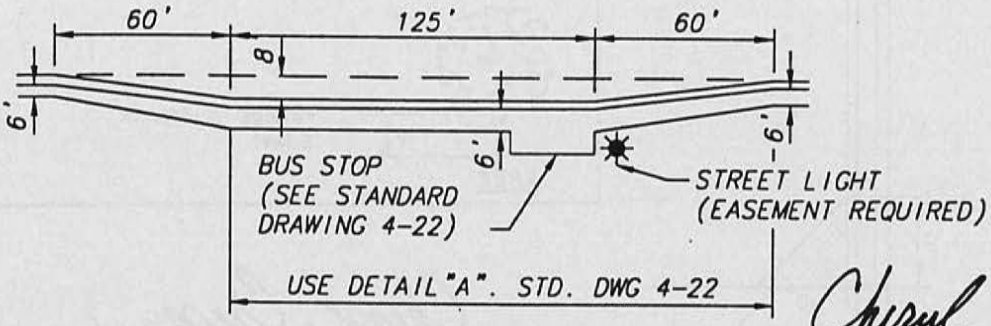

Cheryl Creason
DIRECTOR

NOTES:

1. BUS STOPS AT INTERSECTIONS OF 84' STREETS, 110' STREETS & 130'STREETS ARE PROVIDED FOR BY STANDARD INTERSECTION WIDENING. (DRAWING 4-5)

2. THE DIMENSIONS SHOWN ARE MINIMUM STANDARDS. THE DIRECTOR MAY DETERMINE LONGER WIDENING TO BE NECESSARY AT CERTAIN SPECIAL CASE IMPORTANT INTERSECTIONS WHERE DOCUMENTATION WAS MADE PRIOR TO SUBMITTAL OF PLANS.

COUNTY OF SACRAMENTO
PUBLIC WORKS AGENCY
TRANSPORTATION DIVISION

BUS TURNOUT

SCALE: NONE
DATE: 8/98
DRAWN BY:

4-21

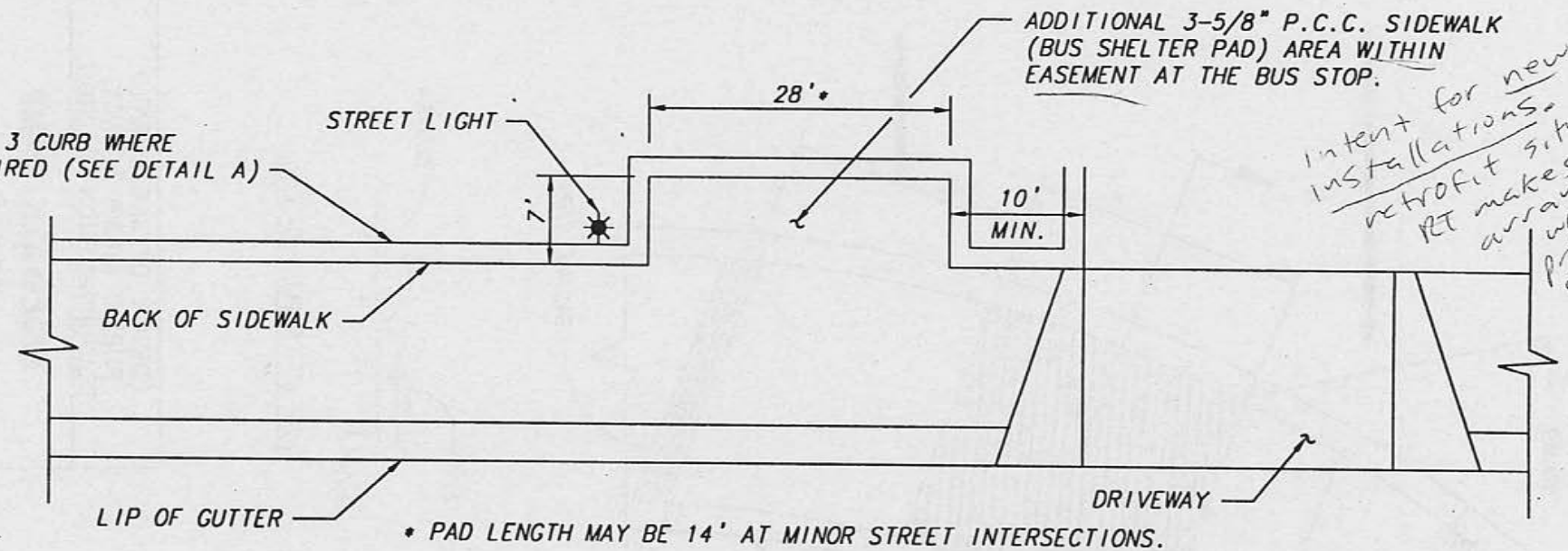

intent for new installations. In retrofit situations RT makes arrangements w/ property owner

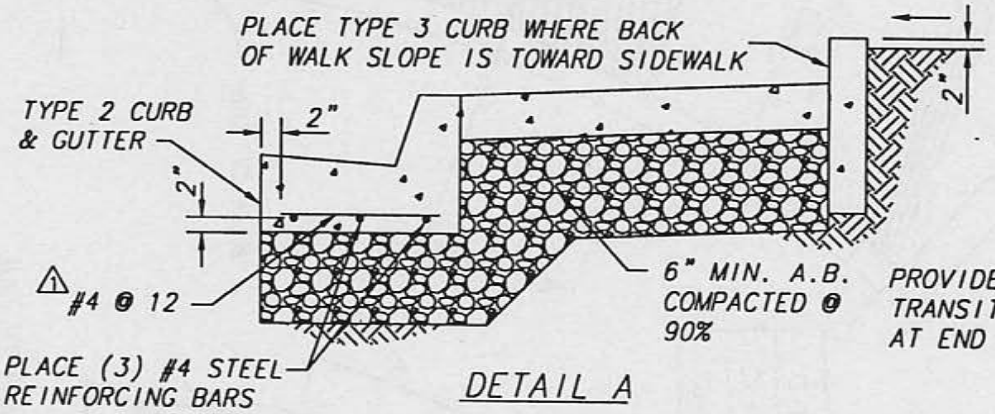

DETAIL A

NOTES:

1. DETAIL 'A' SECTION SHALL BE USED FOR 100 FEET EACH SIDE OF BUS STOPS WITHOUT TURNOUTS. THE REINFORCING STEEL SHALL BE CONTINUED ACROSS ANY DRIVEWAYS WITHIN THE 100 FOOT DISTANCE FROM THE BUS STOP.
2. SEE STANDARD DRAWING 4-21 FOR APPLICATIONS OF DETAIL 'A' AT BUS STOP TURNOUTS.
3. PLACE UNDER-SIDEWALK DRAINS (STD. DWG. 4-28) AT ALL BEHIND-SIDEWALK DRAINAGE CATCH POINTS.

1 REVISED 10-91

Cheryl Creson
DIRECTOR

COUNTY OF SACRAMENTO
PUBLIC WORKS AGENCY
TRANSPORTATION DIVISION

BUS STOP

SCALE: NONE
DATE: 8/98
DRAWN BY:

4-22

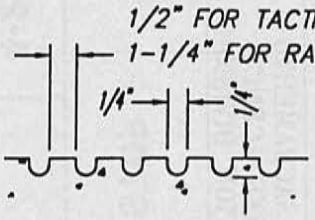

GROOVE DETAIL

CURB TYPE	DIM 'C'	DIM 'D'
TYPE 1/1A	3-3/8"	3'-5"
TYPE 2	5-1/2"	5'-6"

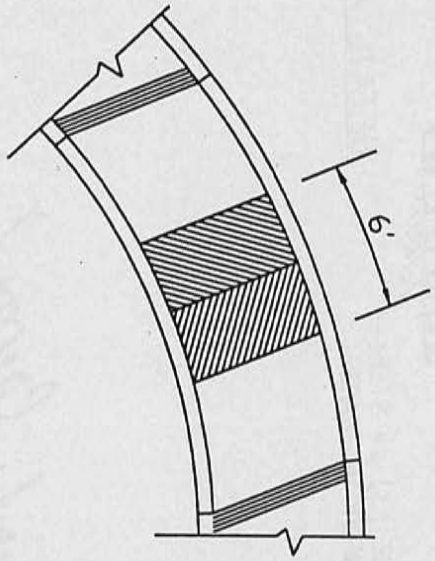

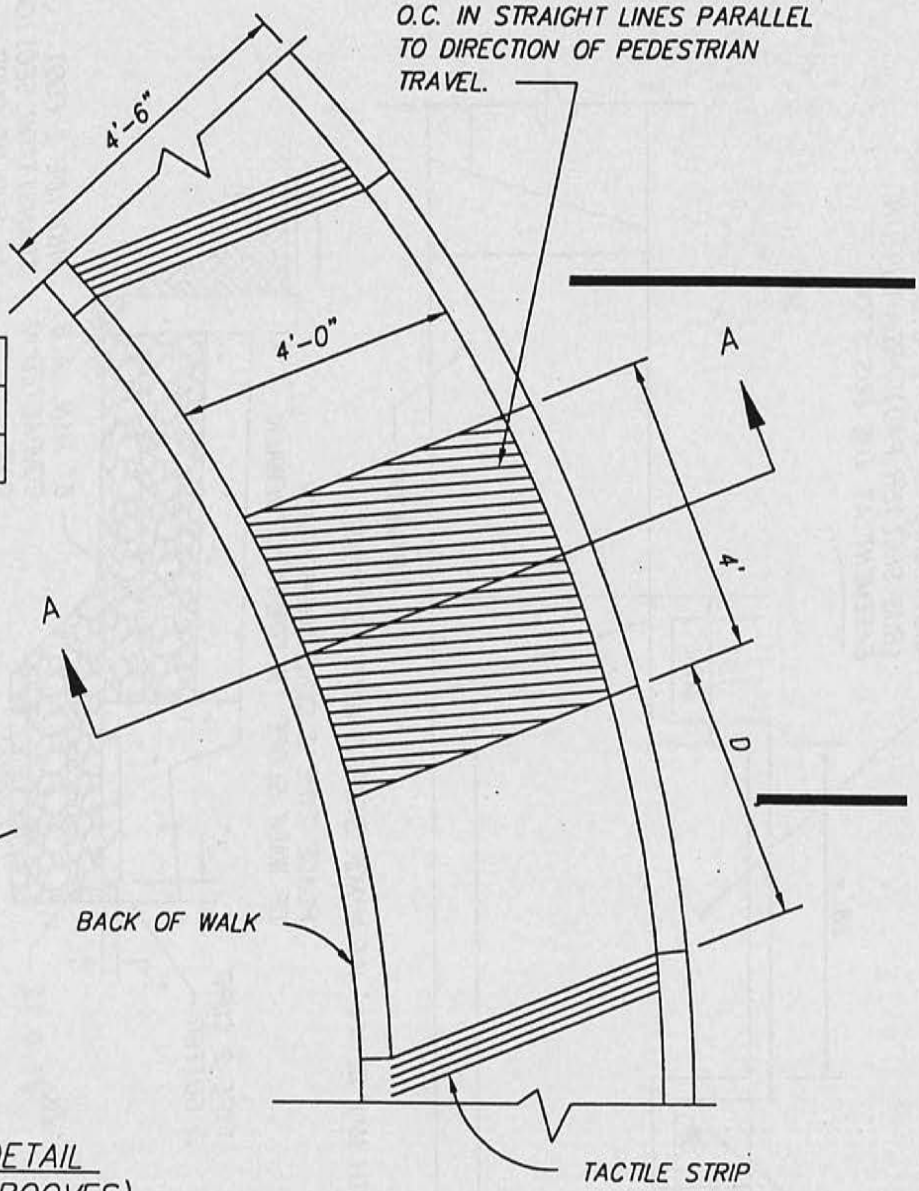

SINGLE RAMP DETAIL
(WITH 'V' GUIDE GROOVES)

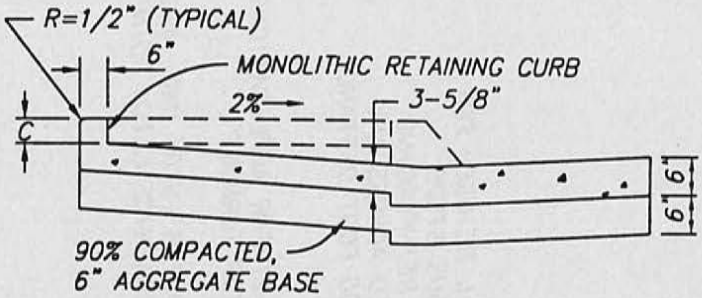

SECTION A-A

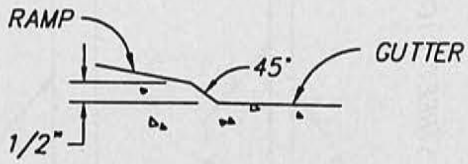

LIP OF RAMP DETAIL

NOTES:
RAMPS SHALL HAVE A HEAVY BROOM FINISH TRANSVERSE TO THE SLOPE OF THE RAMP AND A TACTILE STRIP 1' (ONE FOOT) WIDE AT EACH END.

Cheryl Creson
DIRECTOR

COUNTY OF SACRAMENTO
PUBLIC WORKS AGENCY
TRANSPORTATION DIVISION

SIDEWALK RAMP DETAILS

SCALE: NONE
DATE: 8/98
DRAWN BY:

4-23

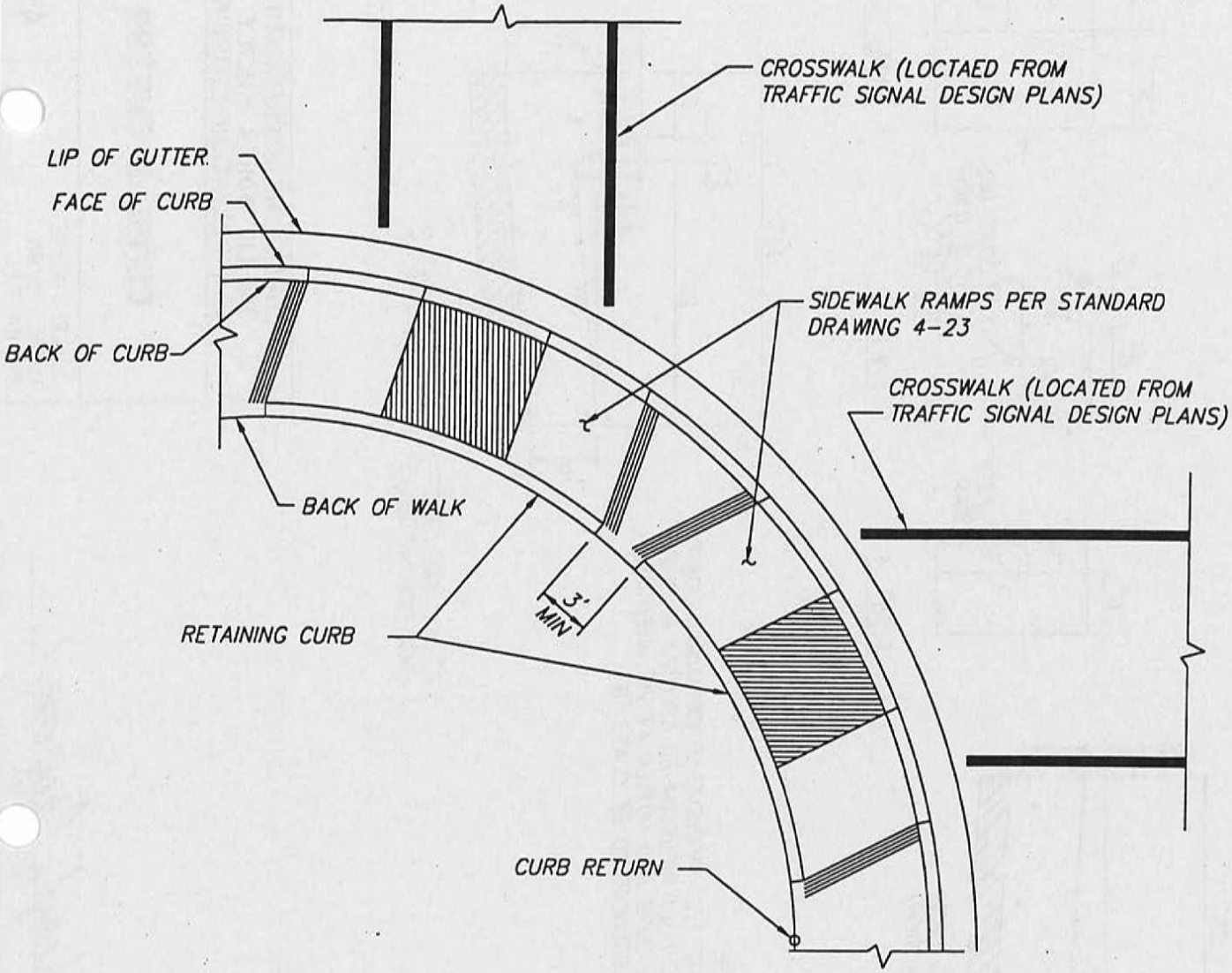

NOTES:

1. ALL INTERSECTIONS WITH AM 84, 108, OR 130 FOOT STREET SHALL HAVE TWO (2) RAMPS AS SHOWN.

2. AT INTERSECTIONS WITH NO MAJOR (84, 108, OR 130 FOOT) STREETS, A SINGLE RAMP (WITH "V" GUIDE GROOVES) AND TYPE 1 OR 1A CURB & GUTTER MAY BE USED. (SEE DRAWING 4-23).

3. THE PLANS SHALL SHOW THE CORRECT NUMBER & LOCATION OF RAMPS ON EACH CORNER.

Cheryl Crosson
DIRECTOR

COUNTY OF SACRAMENTO PUBLIC WORKS AGENCY TRANSPORTATION DIVISION	
SIDEWALK RAMP PLACEMENT	
SCALE: NONE DATE: 8/98 DRAWN BY:	4-24

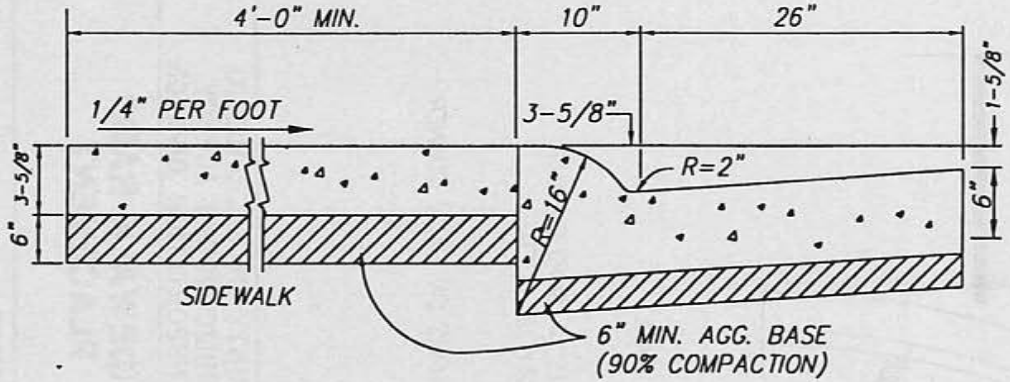

TYPE 1A

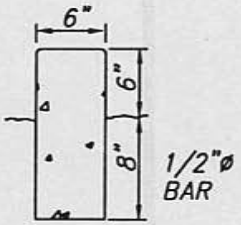

TYPE 3

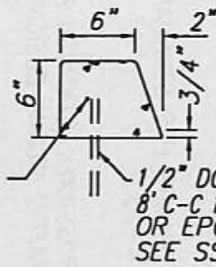

TYPE 4

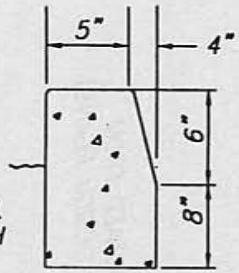

TYPE 5

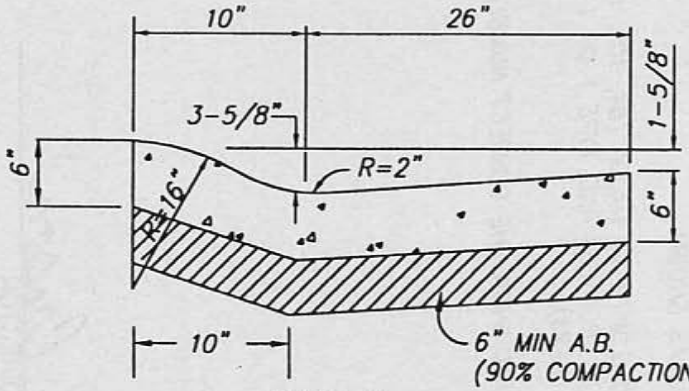

TYPE 1

NOTES:
LOCATE 1/2" TRANSVERSE EXPANSION JOINTS OF ASPHALT IMPREGNATED CELOTEX IN SIDE-WALK, CURB AND GUTTER AT 20' INTERVALS.
ALL CONCRETE TO BE CLASS "B".

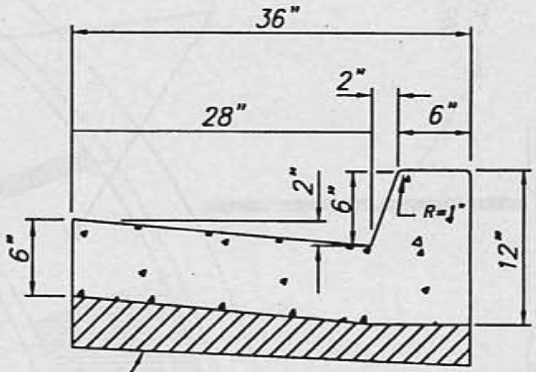

TYPE 2

Cheryl Crosson
DIRECTOR

COUNTY OF SACRAMENTO
PUBLIC WORKS AGENCY
TRANSPORTATION DIVISION

CURBS & GUTTER

SCALE: NONE
DATE: 8/98
DRAWN BY:

4-25

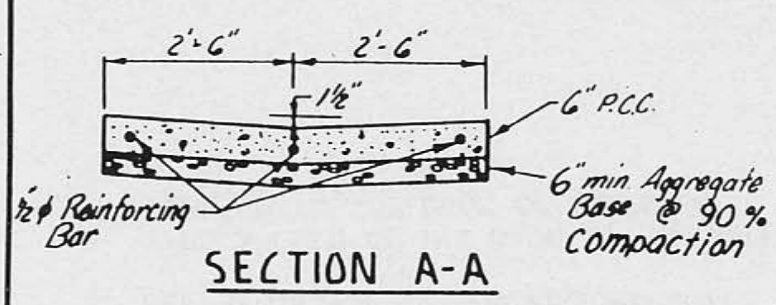

SECTION A-A

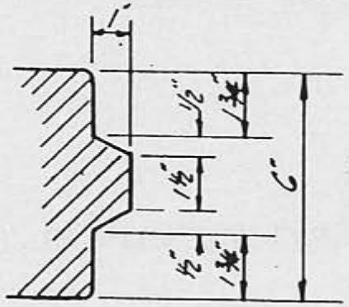

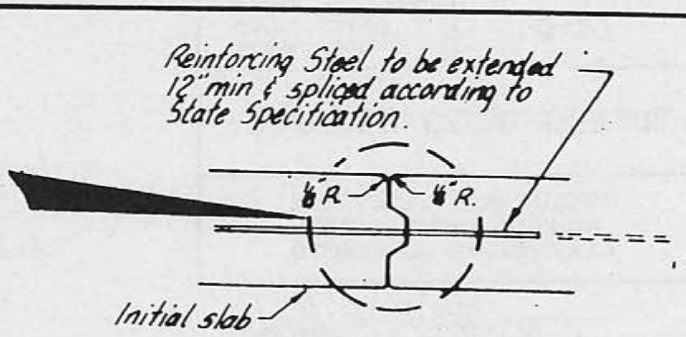

CONTACT JOINT DETAIL

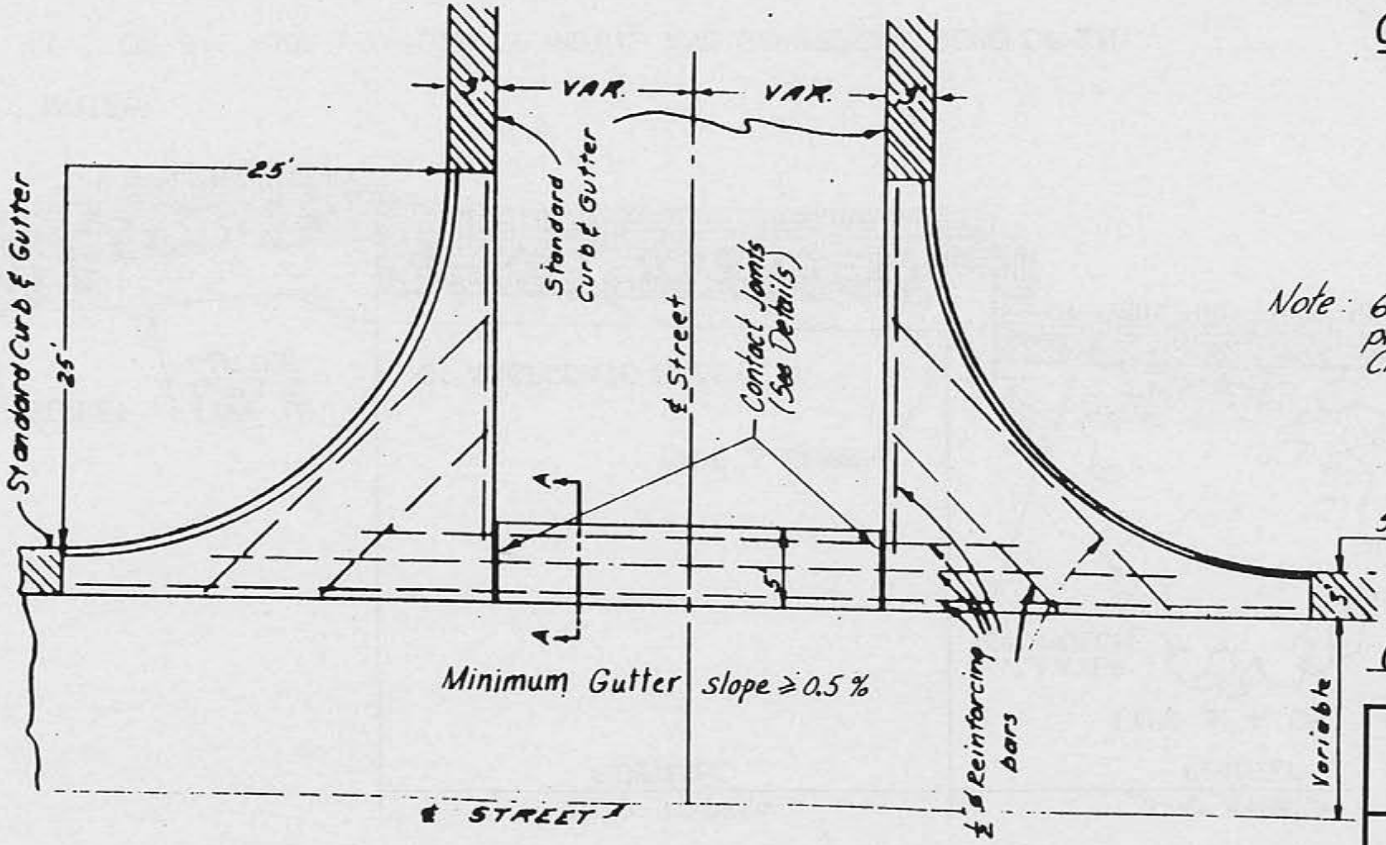

Note: 6" min Aggregate base to be placed within limits of Cross Gutter.

Cheryl Crason
DIRECTOR

COUNTY OF SACRAMENTO
PUBLIC WORKS AGENCY
TRANSPORTATION DIVISION

CROSS GUTTER

Scale: None
Date: 8/98
Drawn By:

4-26

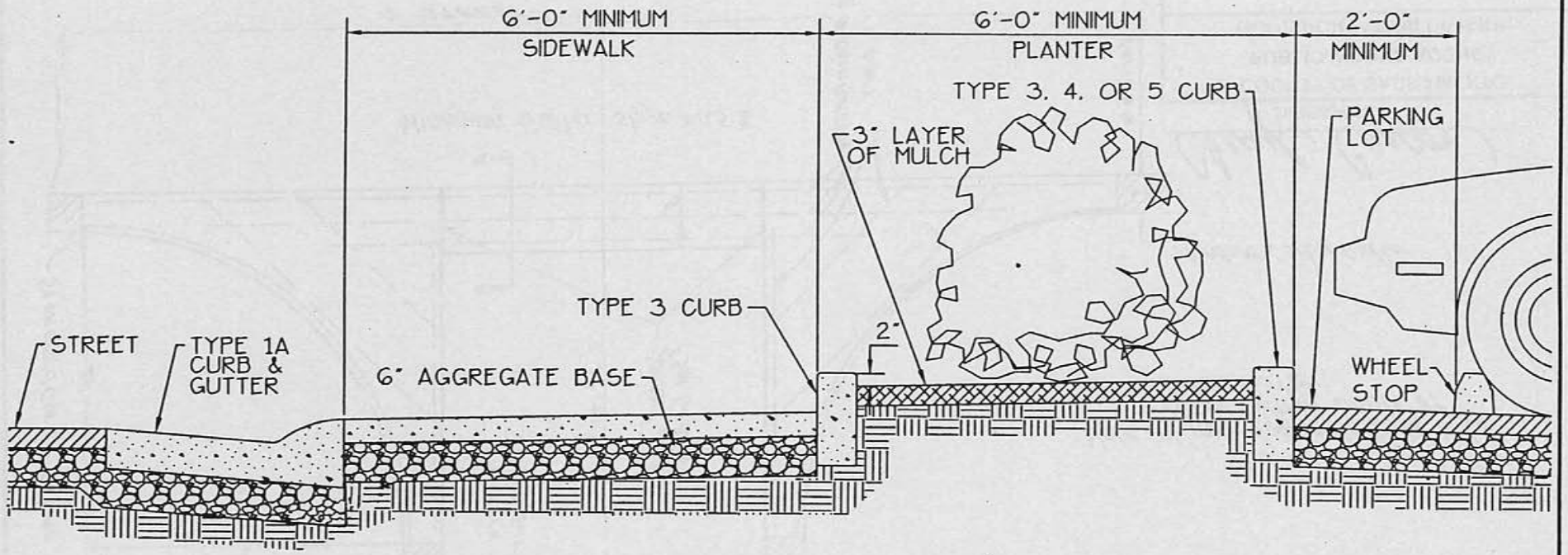

NOTES:

1. FOR 84', 108', 130' STREET WIDTHS AND COMMERCIAL DEVELOPMENT.
2. SEE SECTION 4-32 FOR REQUIREMENTS.
3. TYPE 3 CURB AT THE BACK OF SIDEWALK MAY BE OMITTED IF LAWN IS PLANTED TO THE BACK OF SIDEWALK.

Cheryl Crosson
DIRECTOR

COUNTY OF SACRAMENTO
PUBLIC WORKS AGENCY
TRANSPORTATION DIVISION

BARRIER CURB DETAIL

Scale: None
Date: 8/98
Drawn By: G.M.M.

4-27

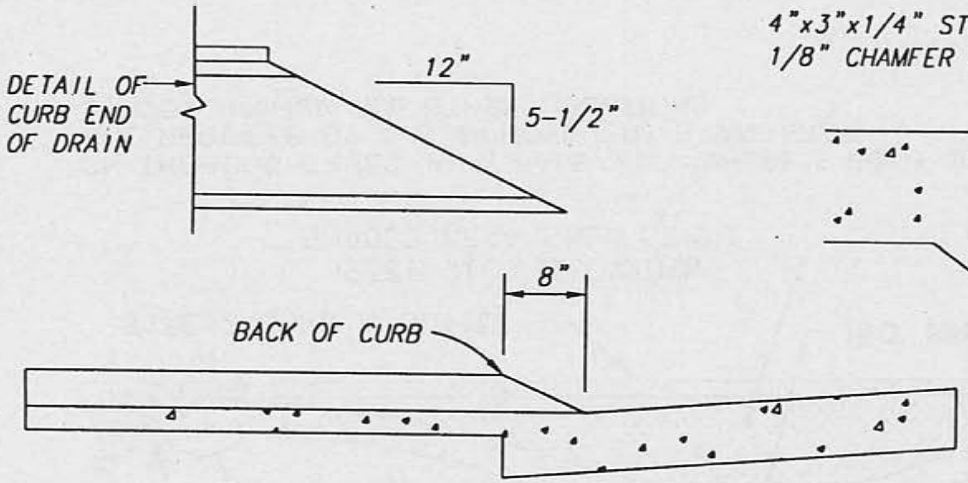

SECTION A–A
(FOR TYPE1 OR 1A CURB)

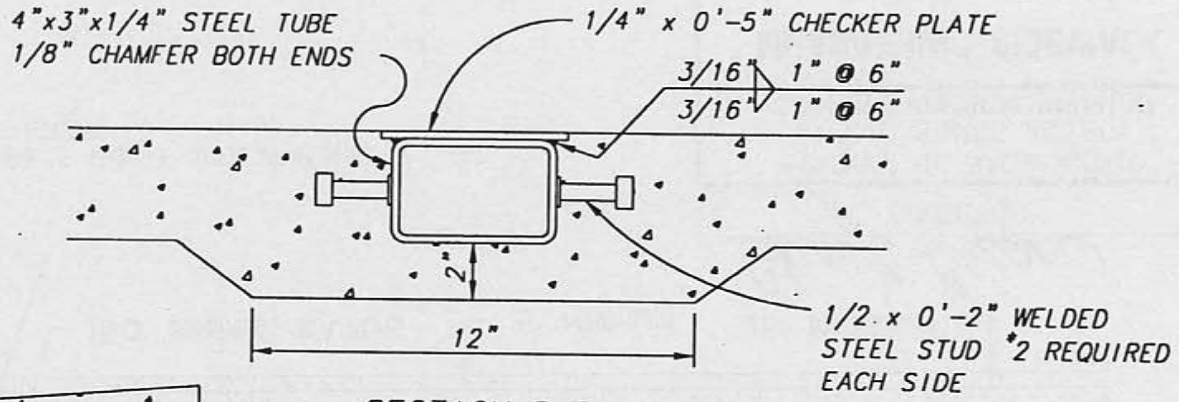

SECTION B–B

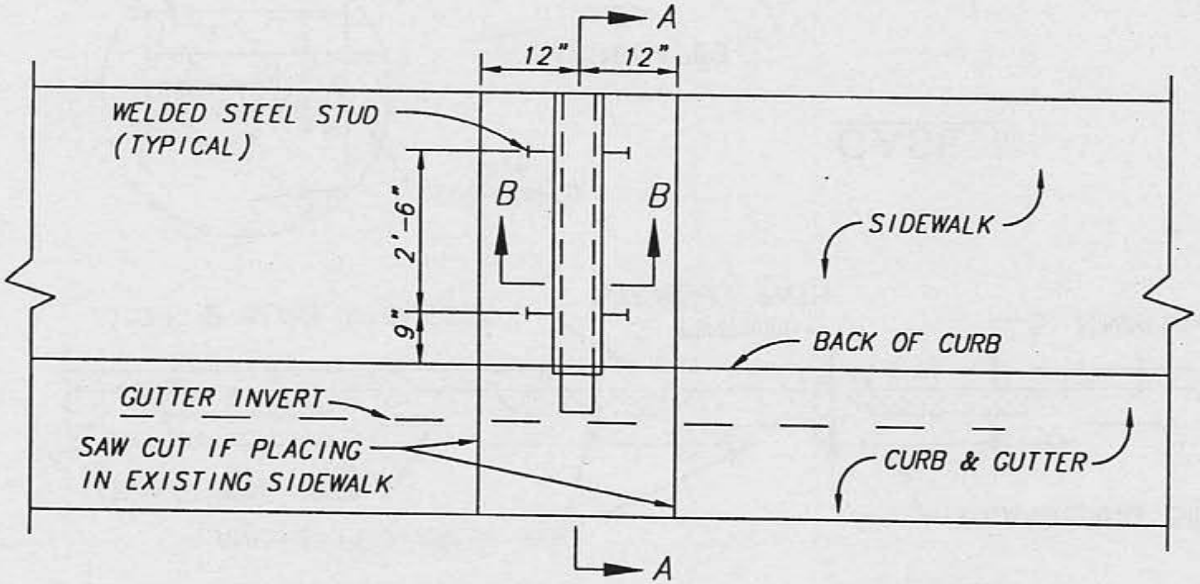

PLAN VIEW OF CURB, GUTTER & SIDEWALK

NOTE:

GALVANIZE AFTER FABRICATION

Cheryl Creson
DIRECTOR

COUNTY OF SACRAMENTO
PUBLIC WORKS AGENCY
TRANSPORTATION DIVISION

UNDER SIDEWALK DRAIN

SCALE: NONE
DATE: 8/98
DRAWN BY:

4-28

CASE I

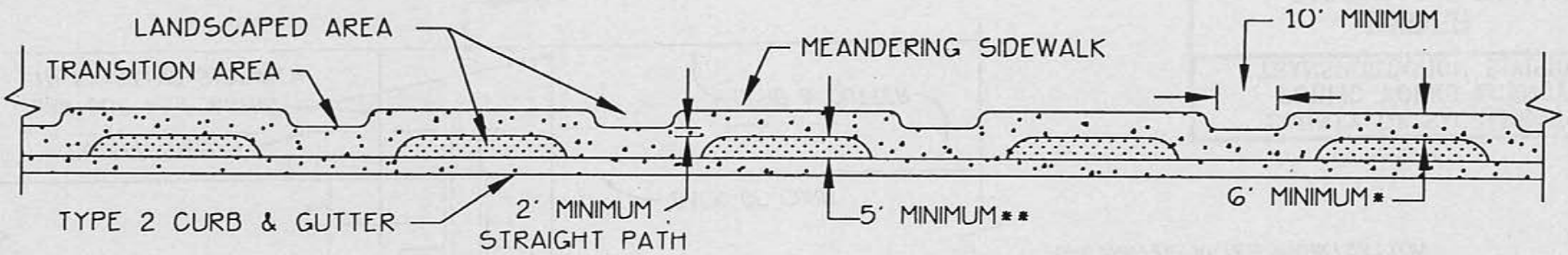

** 8' MINIMUM IF TREES WILL BE PLANTED BETWEEN THE SIDEWALK AND THE CURB & GUTTER.

CASE II

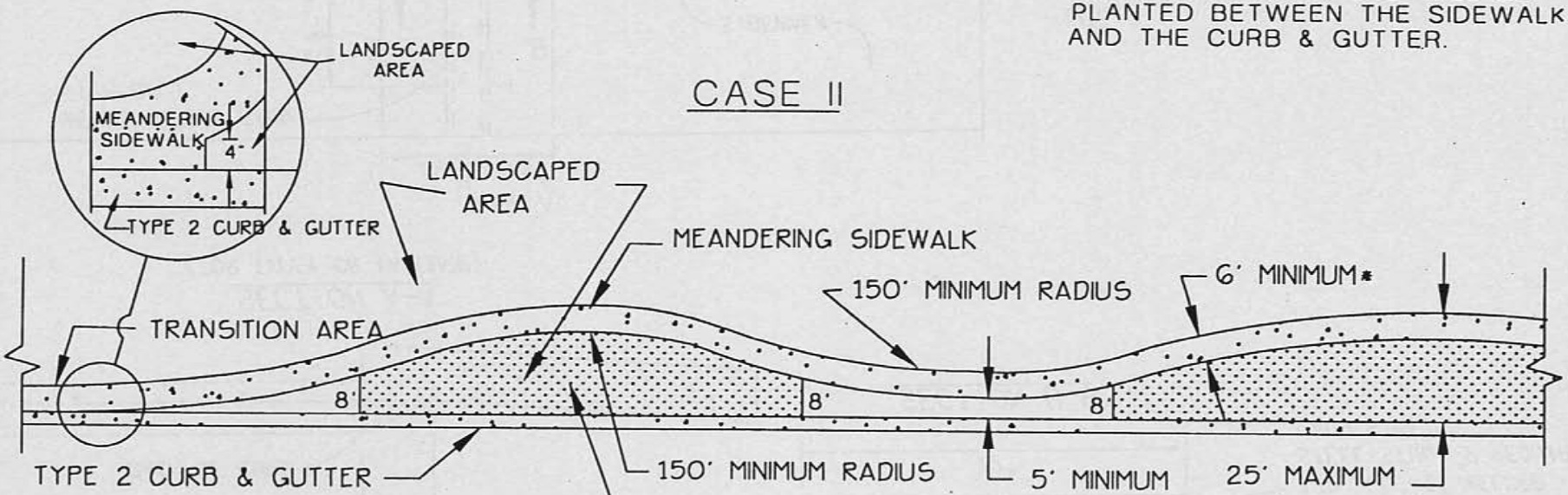

Cheryl Crosa
DIRECTOR

* ON THOROUGHFARES, ARTERIALS, AND WHERE 6 FOOT SIDEWALKS ARE REQUIRED BY THE IMPROVEMENT STANDARDS. 4 FOOT MINIMUM ALL OTHER LOCATIONS.

NOTE: CROSS SLOPE OF MEANDERING SIDEWALK NOT TO EXCEED 2% (CASE I & CASE II)

COUNTY OF SACRAMENTO
PUBLIC WORKS AGENCY
TRANSPORTATION DIVISION

MEANDERING SIDEWALK STANDARDS

SCALE: NONE
DATE: 1/99
DRAWN BY: E.R.D.

4-29

DETAIL A–A

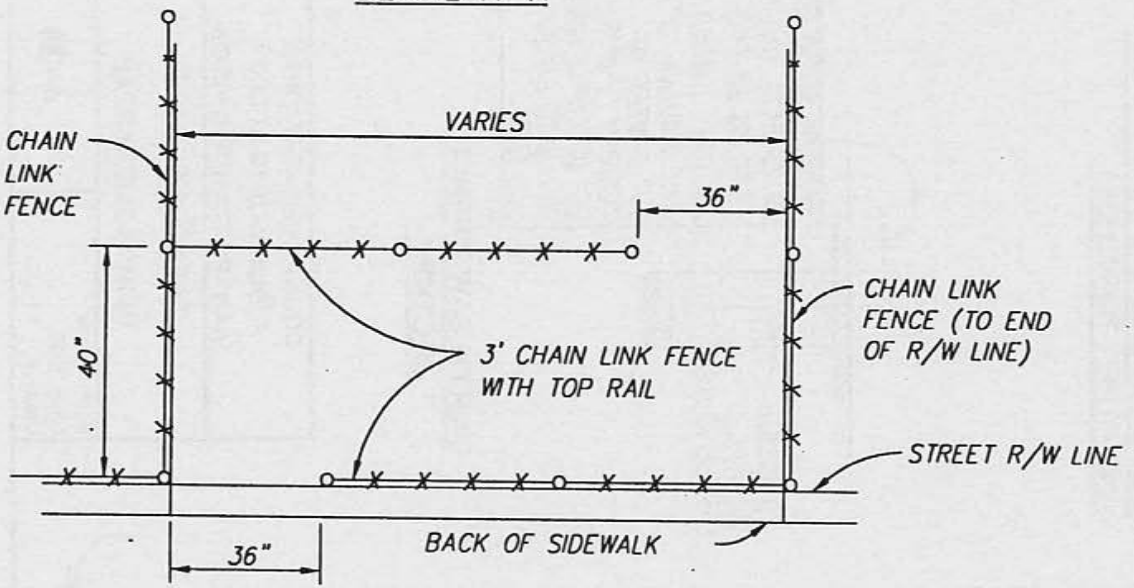

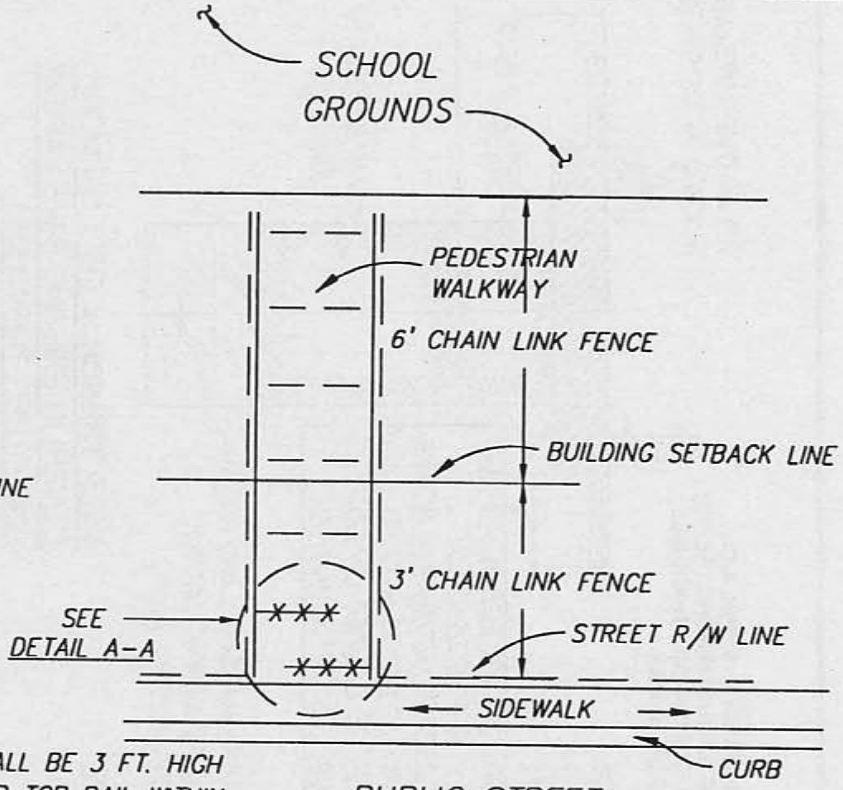

PUBLIC STREET

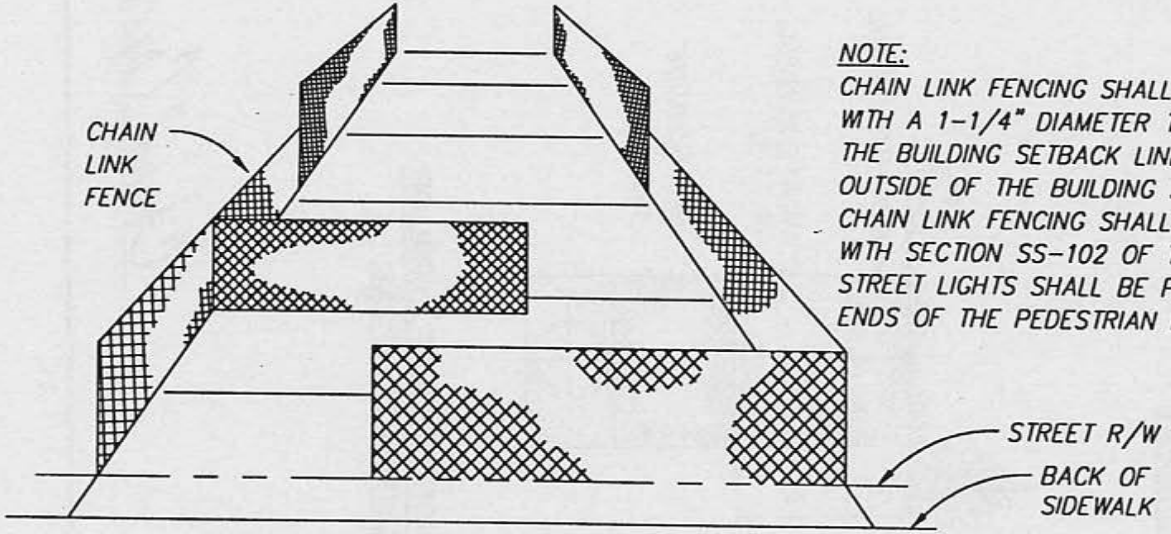

PICTORIAL VIEW

NOTE:
CHAIN LINK FENCING SHALL BE 3 FT. HIGH WITH A 1-1/4" DIAMETER TOP RAIL WITHIN THE BUILDING SETBACK LINE AND 6 FT. HIGH OUTSIDE OF THE BUILDING SETBACK LINE.
CHAIN LINK FENCING SHALL BE IN ACCORDANCE WITH SECTION SS-102 OF THE STANDARD SPECIFICATIONS.
STREET LIGHTS SHALL BE PLACED AT BOTH ENDS OF THE PEDESTRIAN LANE.

Cheryl Creson
DIRECTOR

COUNTY OF SACRAMENTO
PUBLIC WORKS AGENCY
TRANSPORTATION DIVISION

PEDESTRIAN LANE WITH BIKE BARRIER

SCALE: NONE
DATE: 8/98
DRAWN BY:

4-30

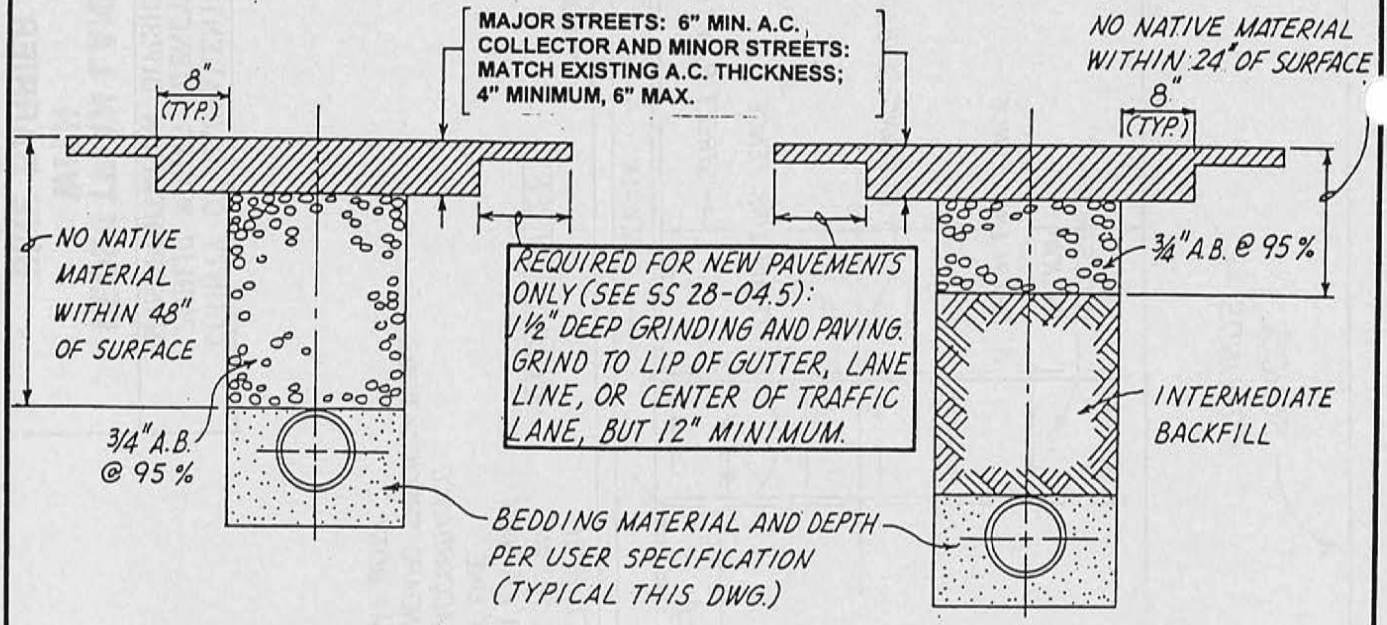

SHALLOW TRENCH (LESS THAN 4 FEET COVER) IN EXISTING PAVEMENT

DEEP TRENCH (4 FEET OR MORE COVER) IN EXISTING PAVED AREAS AND OTHER TRENCHING

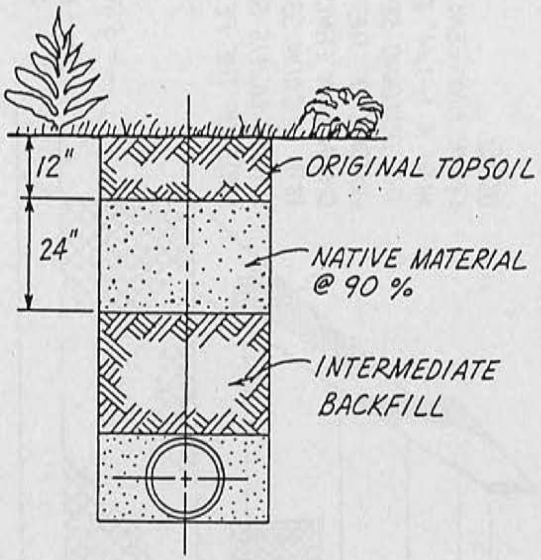

HORTICULTURE, LAWN, OR CULTIVATED AREAS

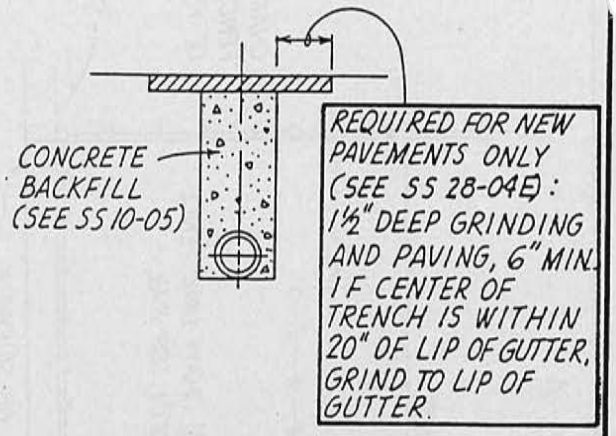

EARTH SAW TRENCH SECTION

Cheryl Creson
DIRECTOR

COUNTY OF SACRAMENTO PUBLIC WORKS AGENCY TRANSPORTATION DIVISION	
TRENCH SECTIONS IN IMPROVED AREAS	
Scale: None Date: 8/98 Drawn By: T.L.U	4-31

1 1/2" DEEP GRIDING AND PAVING, 12" MINIMUM.

For new pavement (within 3 years of resurfacing):
Grind to lip of gutter, lane line, or center of traffic lane.

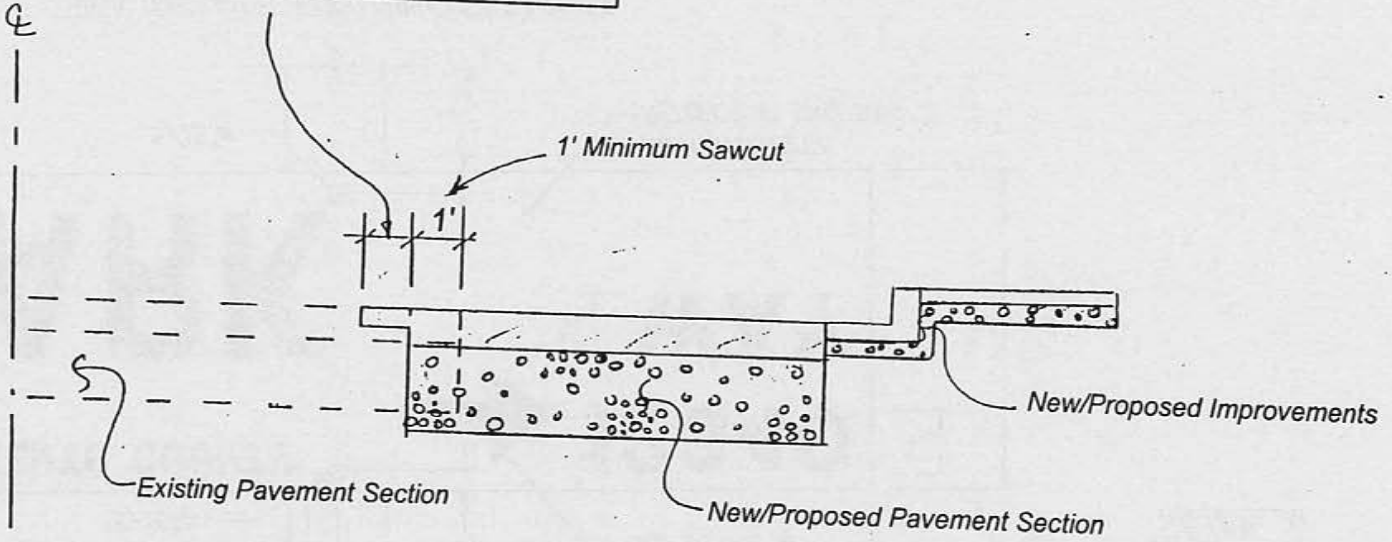

Cheryl Crason
DIRECTOR

COUNTY OF SACRAMENTO
PUBLIC WORKS AGENCY
TRANSPORTATION DIVISION

PAVEMENT WIDENING DETAIL

Scale: None
Date: 8/98
Drawn By: L.R.

4-32

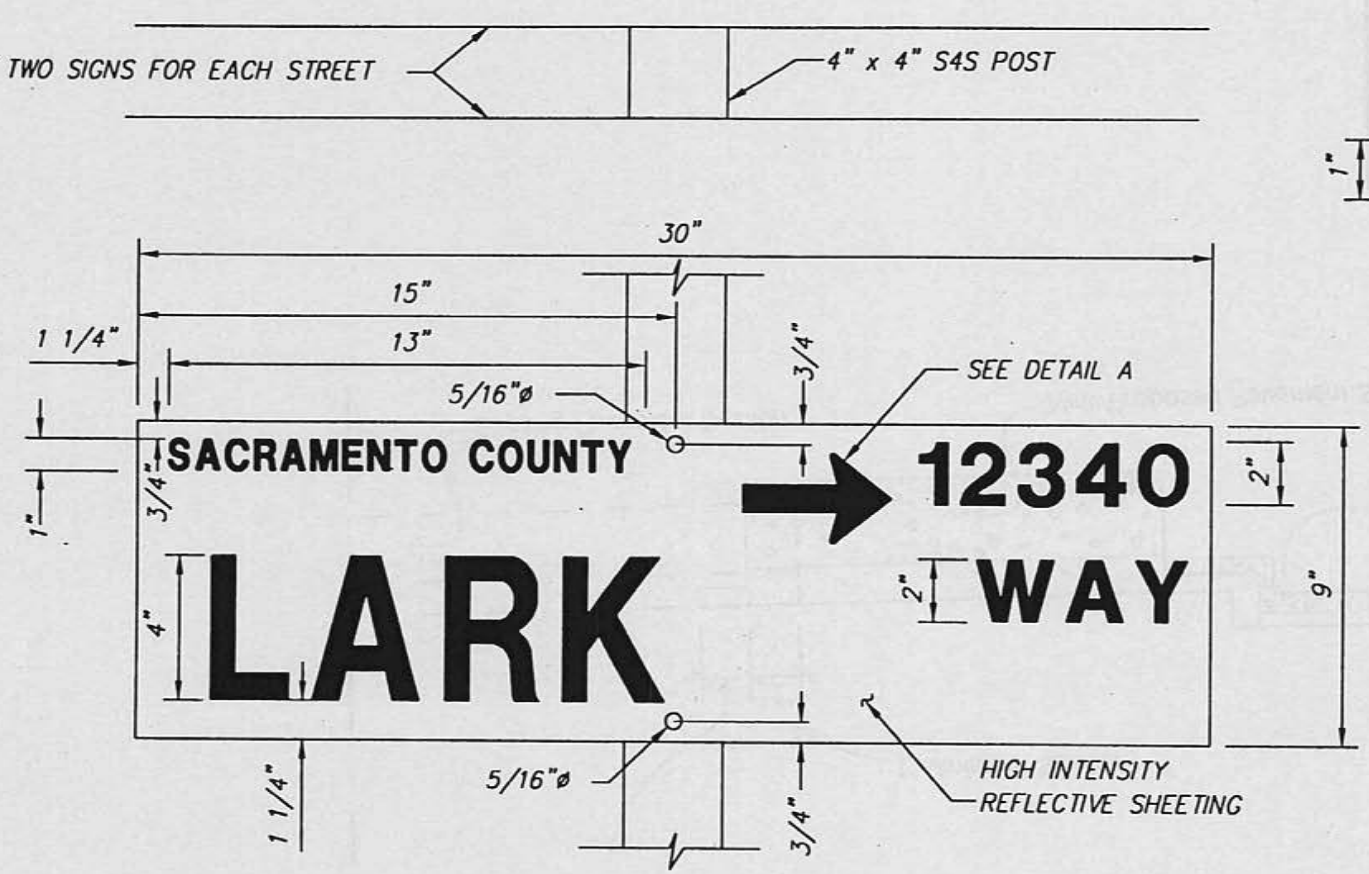

SIGN DETAILS FOR SINGLE STREET

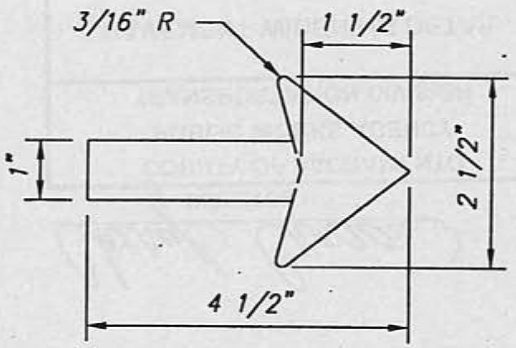

DETAIL A

NOTES:

1. ALUMINUM SHEET ALLOY 6061-T6 0.080" GUAGE ROUNDED CORNERS 1/4" RADIUS.
2. FOR TWO (2) STREETS, PLACE SECOND PAIR OF SIGNS AND AT 90° TO SIGNS AS SHOWN.
3. POSTS SHALL BE REDWOOD OR TREATED DOUGLAS FIR (STATE OF CALIFORNIA SPEC. NO. 56-2.02B).
4. BLOCK NUMBERS SHALL BE AS SHOWN ON THE PLAN IN 2" SERIES "C".

Cheryl Crason
DIRECTOR

COUNTY OF SACRAMENTO
PUBLIC WORKS AGENCY
TRANSPORTATION DIVISION

STREET SIGN

FULLY REFLECTORIZED

SCALE: NONE
DATE: 8/98
DRAWN BY:

4-33

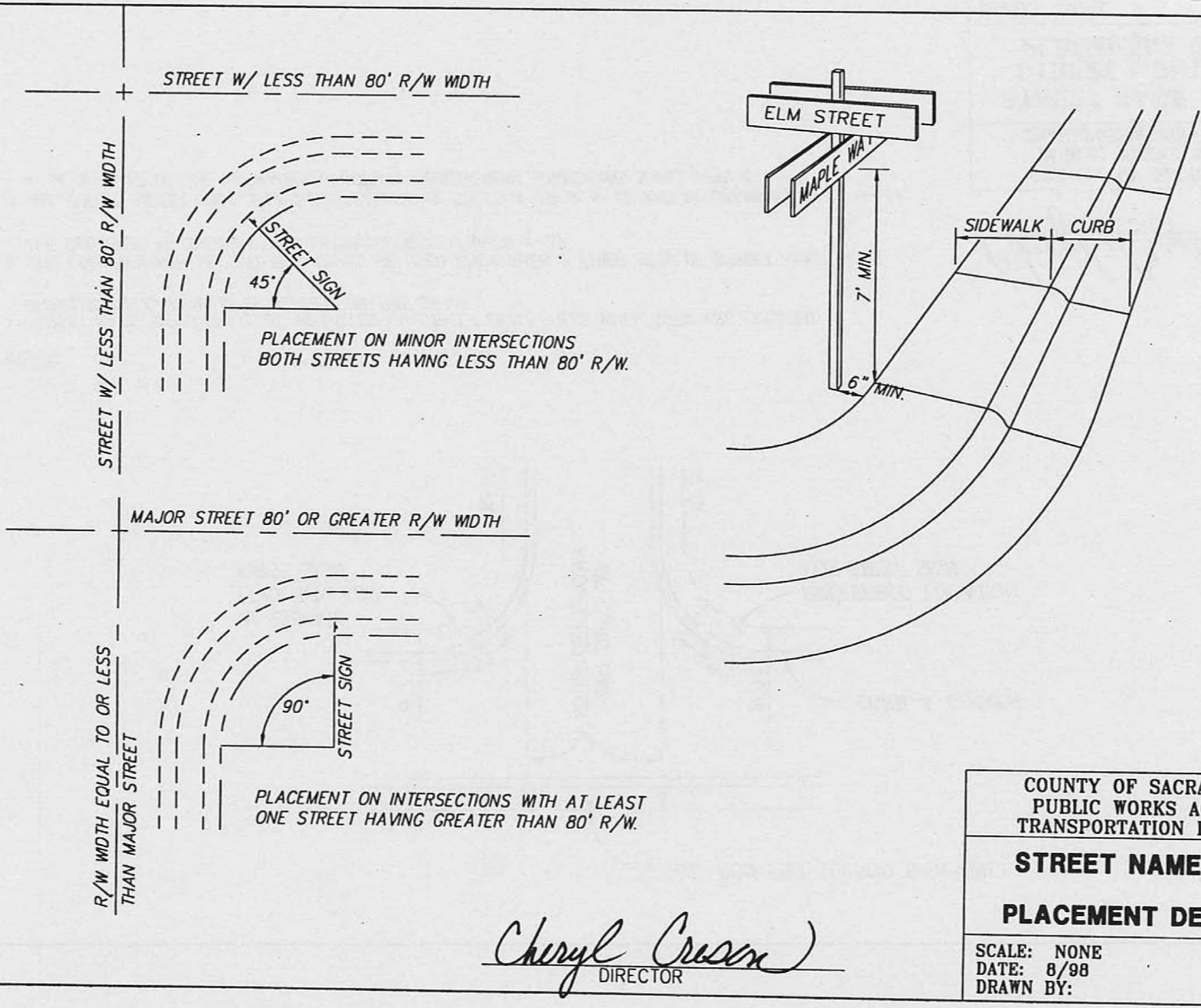

Cheryl Creson
DIRECTOR

COUNTY OF SACRAMENTO
PUBLIC WORKS AGENCY
TRANSPORTATION DIVISION

STREET NAME SIGN

PLACEMENT DETAILS

SCALE: NONE
DATE: 8/98
DRAWN BY:

4-34

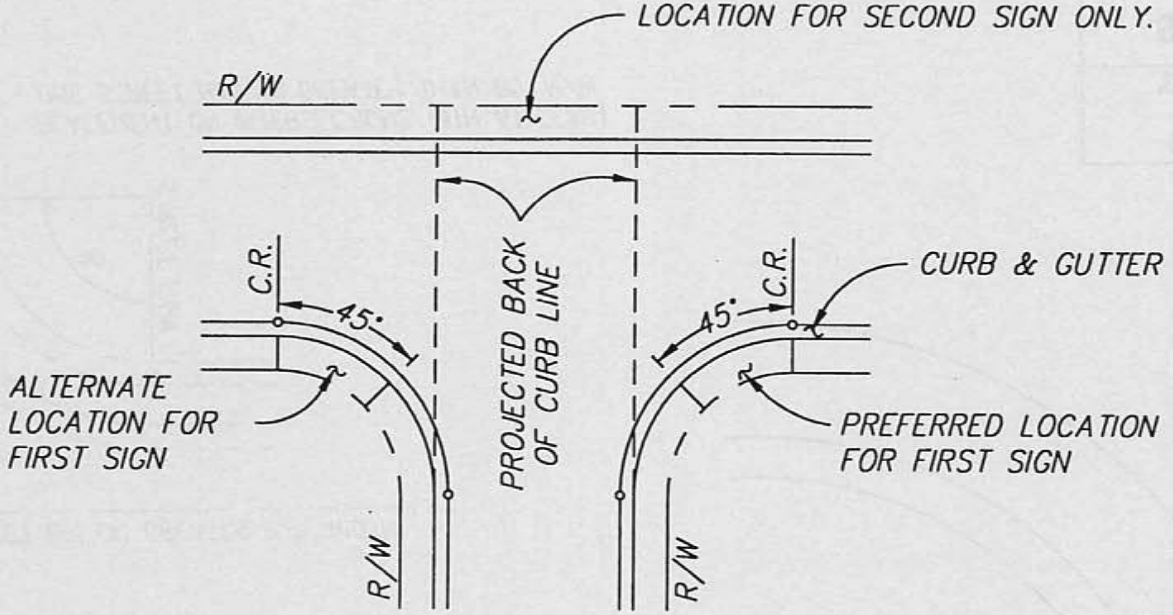

NOTES:

1. STREET NAME SIGNS SHALL BE INSTALLED ON STREET LIGHT POLES WHEN THEY ARE LOCATED WITHIN THE LOCATION LIMITS DEFINED ON THIS DETAIL.

2. THE LOCATION FOR SECOND SIGN SHALL BE USED ONLY WHEN 2 (TWO) SETS OF STREET NAME SIGNS ARE REQUIRED AS SHOWN IN STANDARD DRAWING NUMBER 4-37.

3. ALL OTHER STREET NAME SIGN REQUIREMENTS IN SECT'S 4-26 & 4-27 AND IN DRAWINGS 4-33, 4-34, 4-36 & 4-37 OF THE SACRAMENTO COUNTY IMPROVEMENT STANDARDS SHALL APPLY.

Cheryl Crason
DIRECTOR

COUNTY OF SACRAMENTO
PUBLIC WORKS AGENCY
TRANSPORTATION DIVISION

STREET NAME SIGN ON STREET LIGHT POLE PLACEMENT DETAIL

SCALE: NONE
DATE: 8/98
DRAWN BY:

4-35

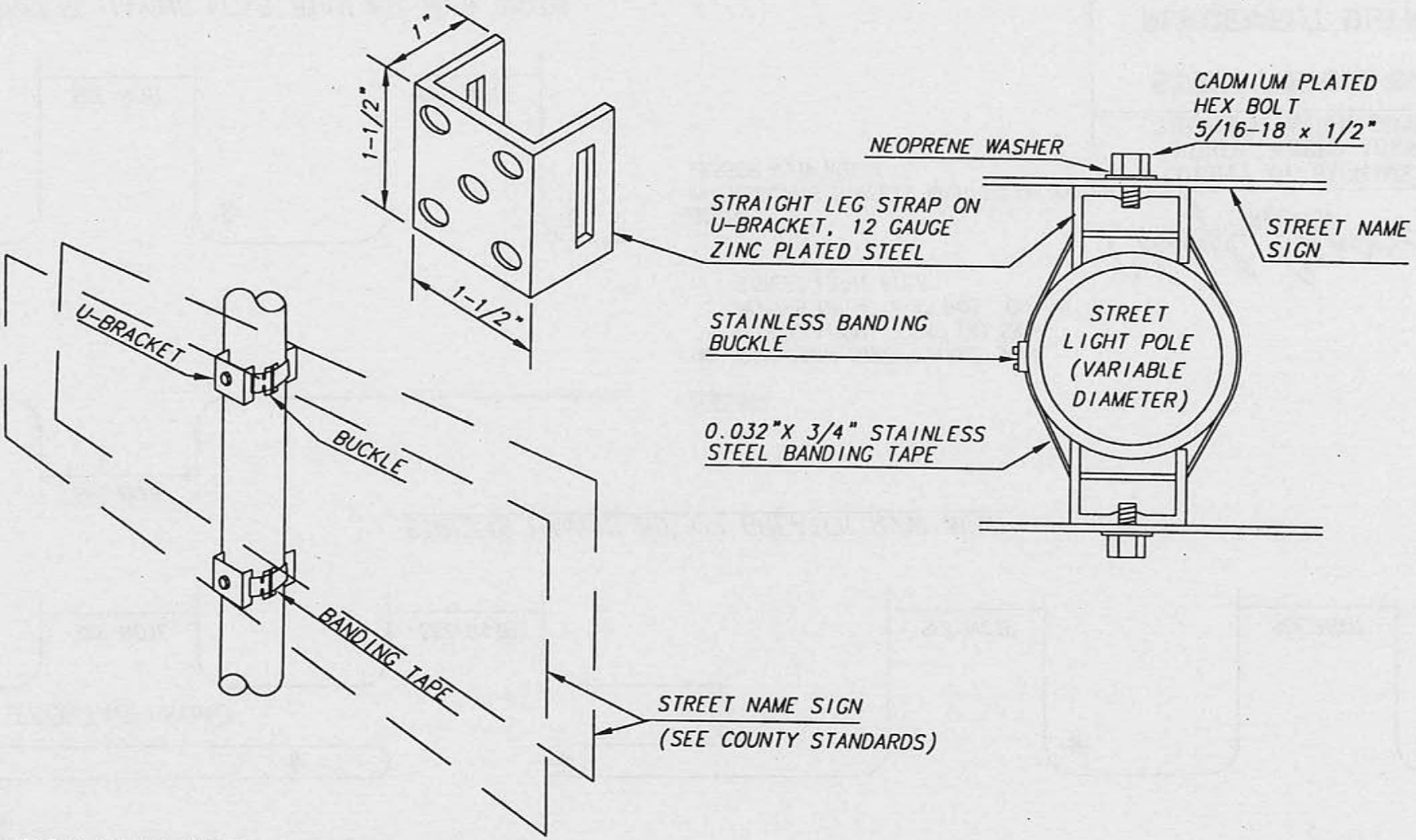

NOTE:

DETAIL SHOWN IS FOR TWO SIGN INSTALLATION. FOUR SIGN INSTALLATION MAY BE MADE, WHERE APPLICABLE, BY FASTENING A SECOND PAIR OF SIGNS IN THE SAME MANNER.

STANDARD CLEARANCE TO BOTTOM OF LOWEST SIGN IS 7 FEET.

Cheryl Creson
DIRECTOR

COUNTY OF SACRAMENTO
PUBLIC WORKS AGENCY
TRANSPORTATION DIVISION

STREET NAME SIGN INSTALLATION ON STREET LIGHT POLE

SCALE: NONE
DATE: 8/98
DRAWN BY:

4-36

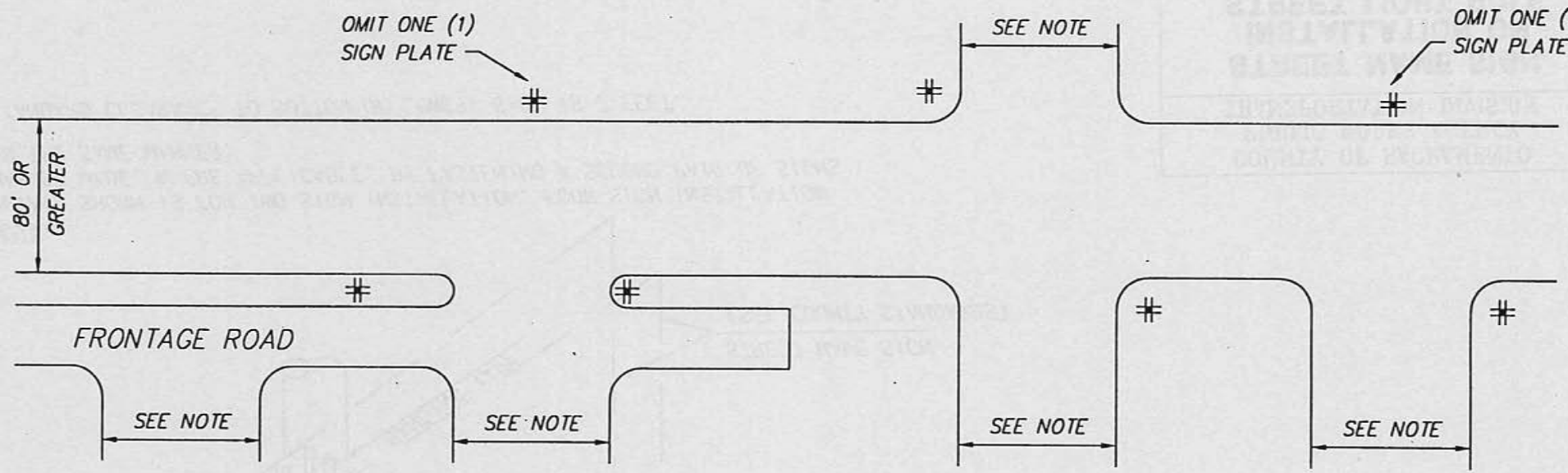

STREETS HAVING 80' OR GREATER R/W WIDTH

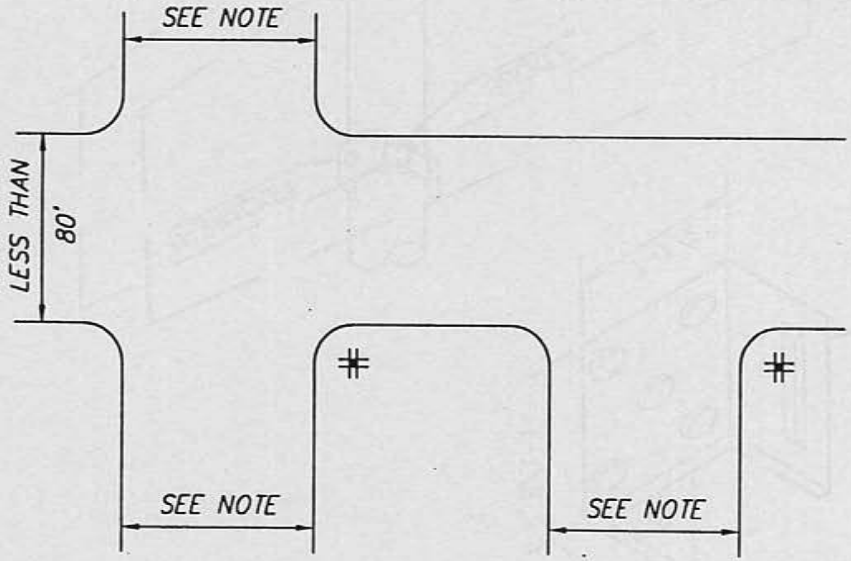

STREETS HAVING LESS THAN 80' R/W WIDTH

LEGEND:

STANDARD STREET NAME SIGN INSTALLATION. FOUR (4) SIGN PLATES ON 4" x 4" POST OR ON STREET LIGHT POLE.

NOTE:
INTERSECTING STREETS WITH EQUAL OR LESSER R/W WIDTH

Cheryl Crosa
DIRECTOR

COUNTY OF SACRAMENTO
PUBLIC WORKS AGENCY
TRANSPORTATION DIVISION

STREET NAME SIGN PLACEMENT DETAILS

SCALE: NONE
DATE: 8/98
DRAWN BY:

4-37

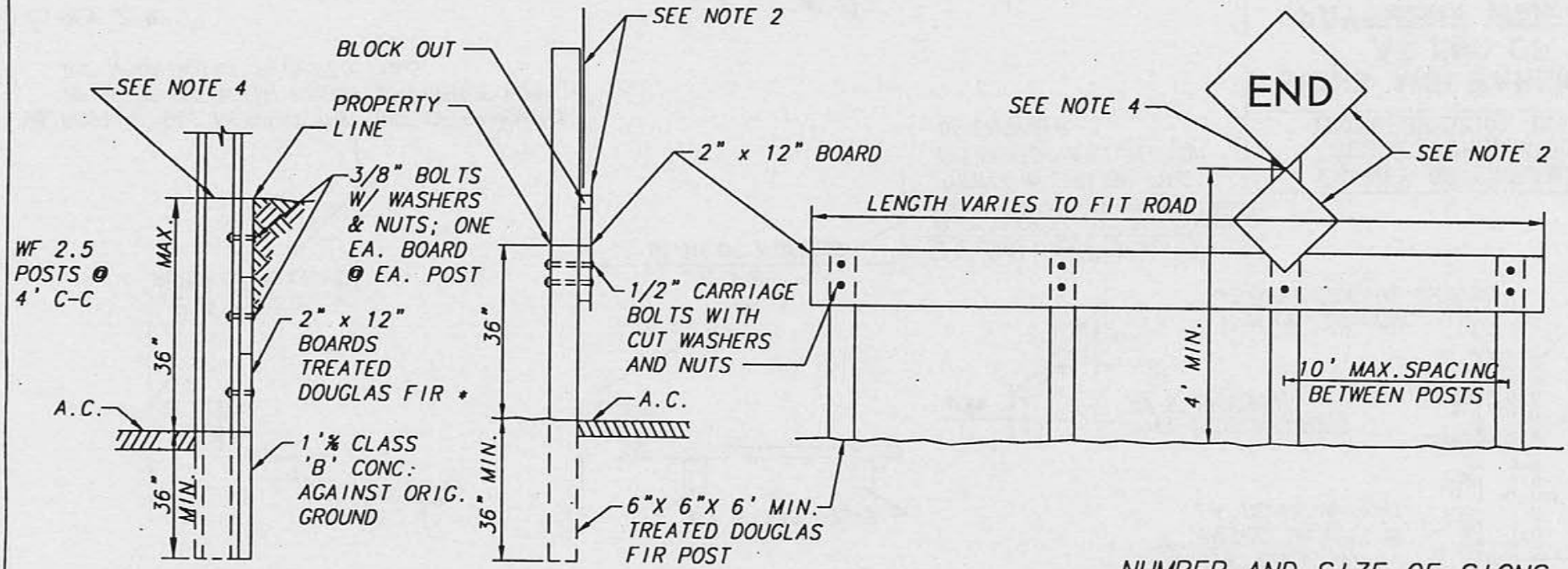

STREET ENDING IN CUT WHERE SLOPE NOT OBTAINABLE

NUMBER AND SIZE OF SIGNS

R/W WIDTH	W31		TYPE N		C2 SIGN	
	SIZE	NO.	SIZE	NO.	SIZE	NO.
40'	24"	1	18"	1	36" x 24"	1
50', 56', 60', 70', 74'	24"	1	18"	1	48" x 30"	1
84'	24"	2	18"	2	48" x 30"	1
108' & 130'	24"	3	18"	3	48" x 30"	1

NOTES:

1. WHERE PERMISSION HAS BEEN GRANTED TO CLOSE AN EXISTING PUBLIC STREET, A C2 "ROAD CLOSED" SIGN WILL BE REQUIRED ON THE CENTERLINE OF THE ROAD IN ADDITION TO THE W31 "END" SIGNS.
2. 24" x 24" W31 SIGNS AND 18" x 18" RED TYPE N MARKERS. BLOCK OUT AS NECESSARY FOR TYPE N MARKER TOP MOUNTING BOLT (BOTTOM MOUNTING BOLT NORMALLY THROUGH BARRIER RAIL. RED TYPE N MARKERS TO HAVE SOLID RED REFLECTIVE BACKGROUND W/O ADDED REFLECTORS.)
3. ALL EXPOSED SURFACES SHALL BE PAINTED WITH WHITE PAINT CONFORMING TO STATE STANDARD SPEC. 91-3.
4. POST AT CENTER OR NEAREST TO CENTER ON RIGHT HAND SIDE TO BE EXTENDED TO PROVIDE MOUNTING FOR SIGNS.
5. POST SHALL BE PRESSURE TREATED PER STATE SPEC. 58-1.02

Cheryl Crosson
DIRECTOR

COUNTY OF SACRAMENTO
PUBLIC WORKS AGENCY
TRANSPORTATION DIVISION

STREET CLOSURE TIMBER BARRICADE

SCALE: NONE
DATE: 8/98
DRAWN BY:

4-38

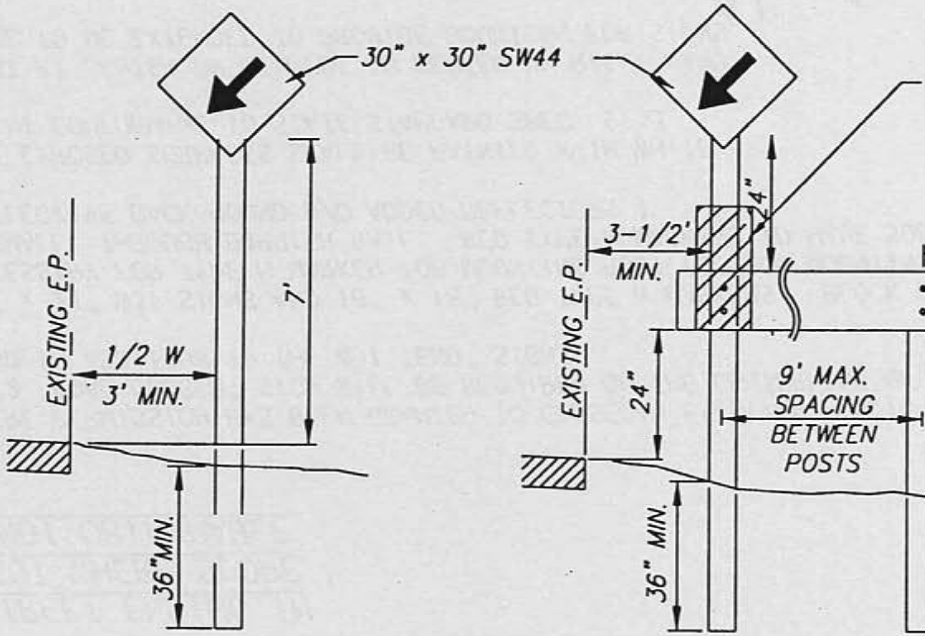

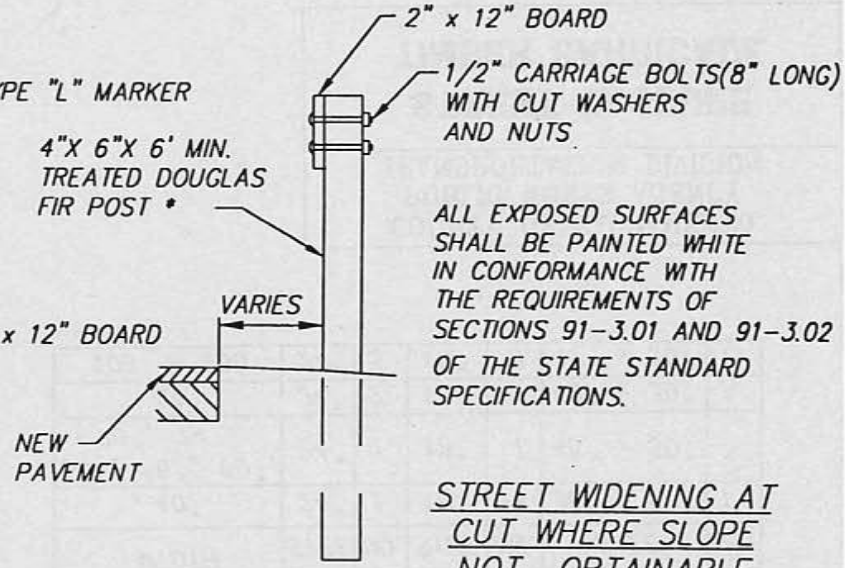

STREET WIDENING AT CUT WHERE SLOPE NOT OBTAINABLE

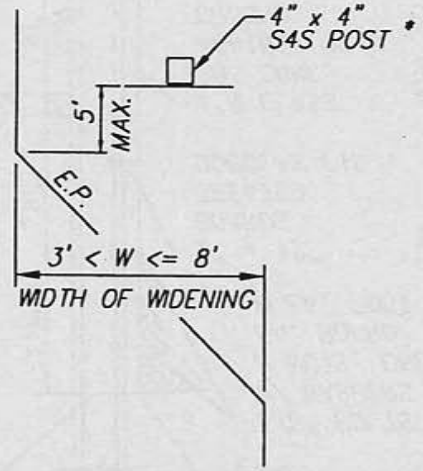

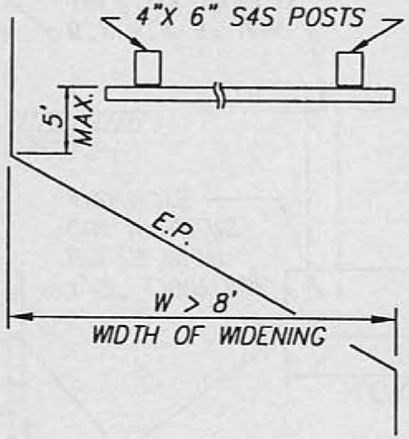

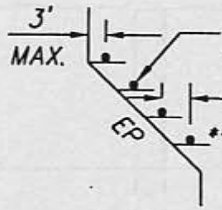

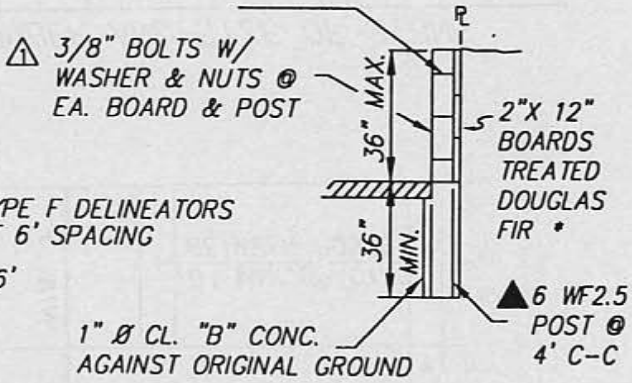

SPECIAL APPLICATION AT DIRECTION OF ENGINEER

**SW44 IN LIEU OF TYPE F DELINEATOR AT DIRECTION OF ENGINEER

▲ POST AT SIDE NEAREST THE EDGE OF PAVEMENT TO BE OF SUFFICIENT HEIGHT TO PROVIDE FOR THE MOUNTING OF REQUIRED SIGNS.

1 REV. 2-92

* STATE OF CALIFORNIA SPECIFICATIONS 58-1.02

Cheryl Creson
DIRECTOR

COUNTY OF SACRAMENTO
PUBLIC WORKS AGENCY
TRANSPORTATION DIVISION

SIGNS AND BARRICADES AT END OF PAVEMENT WIDENING

SCALE: NONE
DATE: 8/98
DRAWN BY:

4-39

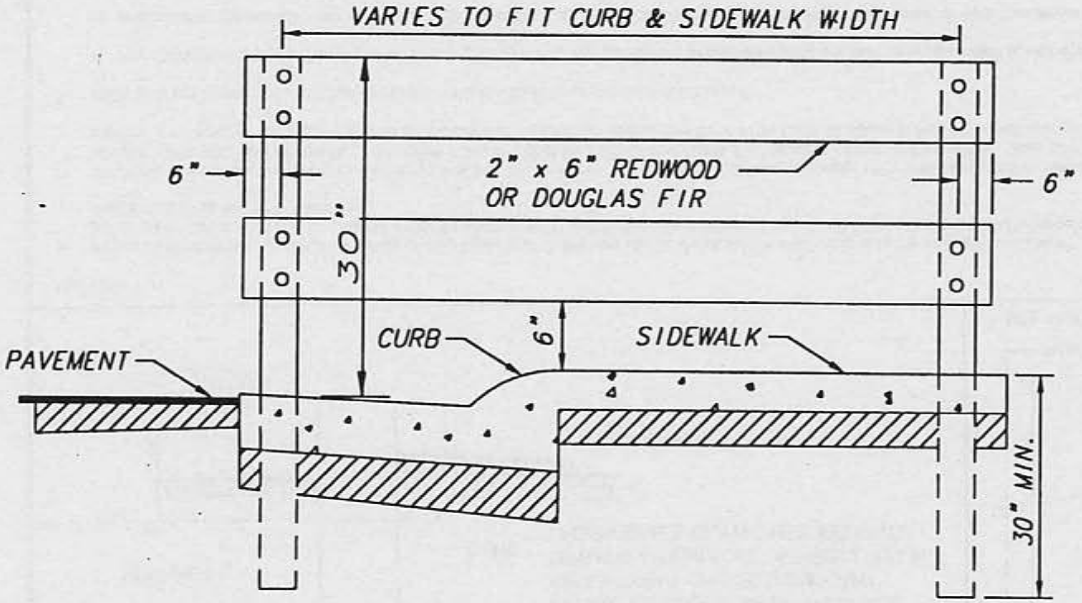

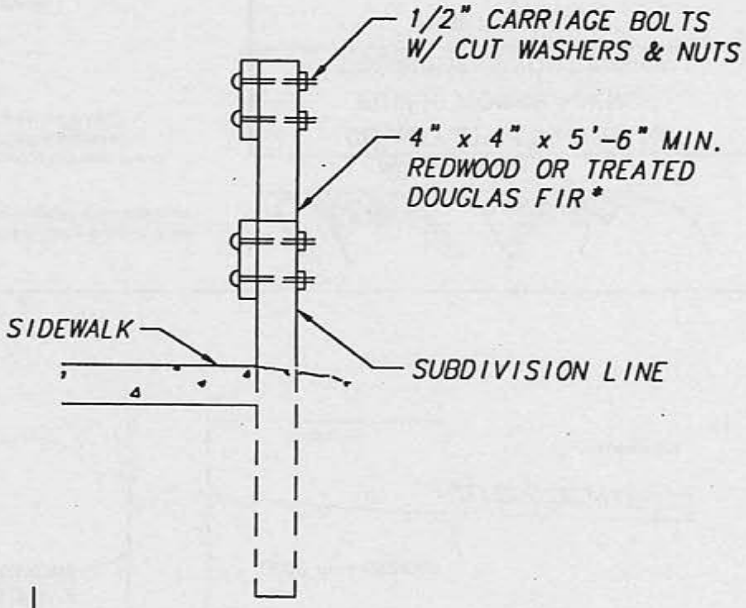

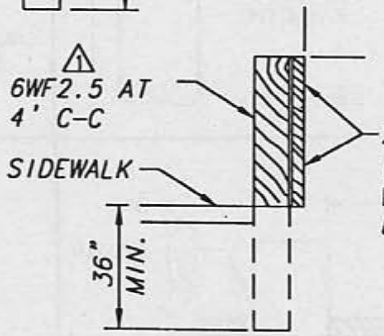

2" x 12" (AS NEEDED)
(ATTACH TO 6WF2.5 W/ 3/8" BOLT W/ WASHER AND NUT-ONE EACH BOARD AT EACH POST)

STREET ENDING IN CUT WHERE SLOPE NOT OBTAINABLE

NOTES:

1. SIDEWALK BARRICADES TO BE ERECTED AT EACH LOCATION WHERE SATISFACTORY PROVISION CAN NOT BE MADE FOR PEDESTRIAN TO CONTINUE BEYOND THE TERMINUS OF A SIDEWALK.

2. ALL EXPOSED SURFACES TO BE PAINTED WITH TWO (2) COATS OF WHITE PAINT CONFORMING TO SECTION 91-3.02 OF STATE SPECIFICATIONS.

⚠1 REV. 2-92

* STATE OF CALIF. SPECIFICATION 58-1.02

Cheryl Crosson
DIRECTOR

COUNTY OF SACRAMENTO
PUBLIC WORKS AGENCY
TRANSPORTATION DIVISION

SIDEWALK BARRICADE

SCALE: NONE
DATE: 8/98
DRAWN BY:

4-40

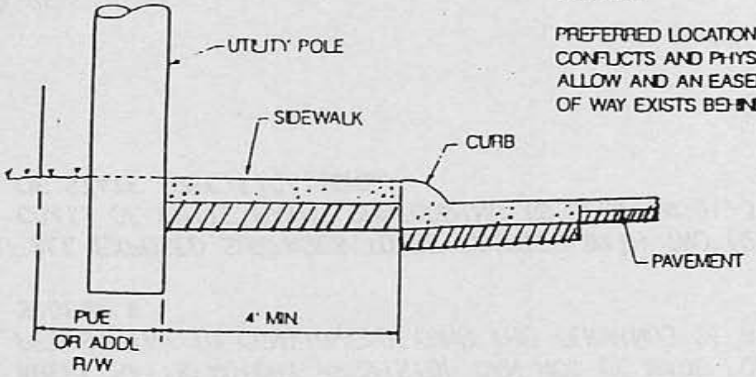

CASE #1

PREFERRED LOCATION WHERE UTILITY CONFLICTS AND PHYSICAL CONDITIONS ALLOW AND AN EASEMENT OR RIGHT OF WAY EXISTS BEHIND WALK.

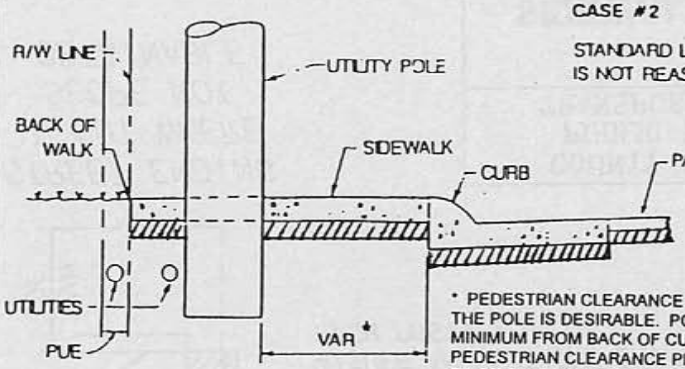

CASE #2

STANDARD LOCATION WHERE CASE #1 IS NOT REASONABLY ACHIEVABLE.

* PEDESTRIAN CLEARANCE OF 36" MINIMUM IN FRONT OF THE POLE IS DESIRABLE. POLE CAN BE PLACED 12" MINIMUM FROM BACK OF CURB IF 36" MINIMUM PEDESTRIAN CLEARANCE PROVIDED BEHIND POLE. POLE TO BE PLACED WITH BACK OF POLE FLUSH WITH BACK OF WALK IF NOT IN CONTACT WITH OTHER UTILITIES.

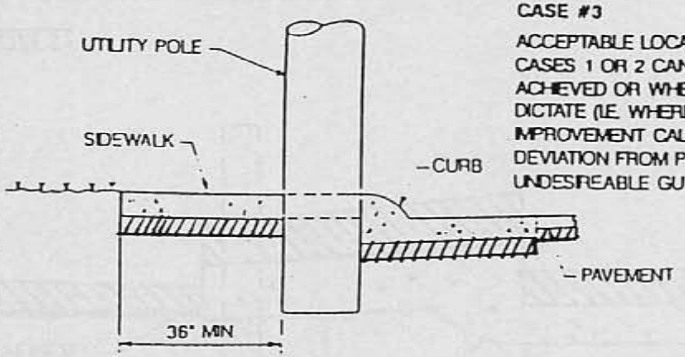

CASE #3

ACCEPTABLE LOCATION ONLY WHERE CASES 1 OR 2 CANNOT BE REASONABLY ACHIEVED OR WHERE SPECIAL CONDITIONS DICTATE (I.E. WHERE SHORT FRONTAGE IMPROVEMENT CAUSES SIGNIFICANT DEVIATION FROM POLE LINE RESULTING IN UNDESIREABLE GUYING REQUIREMENTS).

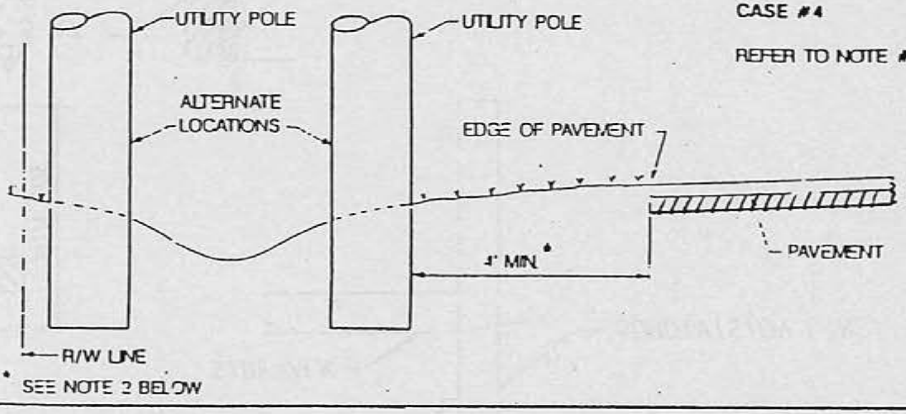

CASE #4

REFER TO NOTE #1

NOTES

1. Where street improvements will ultimately involve Class B or C, the pole should be located in conformance to the appropriate Case #1 or #2 based on the future location of the street improvements. In the case where no curbs would ever be anticipated, the pole would be located 4 feet minimum from the edge of pavement so as not to encroach in an adjacent ditch as shown in Case #4.
2. When urban area roadway improvement projects are undertaken to increase roadway capacity or safety, utility poles may be allowed to remain at the edge of pavement, 0' minimum clearance and preferably .5' minimum (Case #4) or at the back of curb (Case #3). However, where the pre-project utility pole location is within the proposed pavement section, the utility poles should be relocated to the ultimate location per Case #1 or Case #2 above in order to avoid relocation of the utility pole in the future.
3. Utility pole placement under the following conditions is subject to approval by the Director:
   A. In visibility control areas (See Standard Drawing 4-20) and in the right-of-way immediately adjacent to or as an extension of visibility control areas.
   B. In addition to the requirements of 3-A above, poles larger than 18" in diameter within 9' of the edge of pavement or edge line where there is no sidewalk.
   C. Poles located on the outside of sharp curves, or in the tangent of the curves within 200' of the beginning or end of curve (45 MPH or greater speed limit) or 100' (for a lesser speed limit) for consideration of guardrail or special delineation. For purposes of this section sharp curves shall be considered those within radii of less than 800' for urban 2 lane streets and 2000' for rural road or multi-lane streets.
   D. Risers proposed in a location that would reduce curb and gutter clearance. Minimum sidewalk clearance of 36' must be maintained considering the width of the riser.

Cheryl Crozen

DIRECTOR

COUNTY OF SACRAMENTO
PUBLIC WORKS AGENCY
TRANSPORTATION DIVISION

UTILITY POLE PLACEMENT LOCATIONS

Scale: None
Date: 8/98
Drawn By:

4-41

SECTION 5
STREET LIGHT DESIGN

TABLE OF CONTENTS

Street Light Design **Page**

5-1 STREET LIGHTS REQUIRED 5-1
5-2 STREET LIGHTS NOT REQUIRED 5-1
5-3 DEVELOPER'S RESPONSIBILITY 5-1
5-4 UTILITY COMPANY AUTHORIZATION 5-1
5-5 GENERAL PLAN DETAILS 5-2
5-6 DESIGN STANDARDS 5-2
5-7 STREET LIGHT DESIGN DETAILS 5-2
A. Intersections 5-2
B. Cul-de-Sacs 5-2
C. Pedestrian Lanes 5-2
D. Spacing 5-2
E. Street Light Poles 5-3
F. Street Lights on Existing Utility-Owned Poles 5-3
G. Luminaires and Ballasts 5-4
H. Service 5-4
I. Pullboxes 5-5
J. Conductors 5-5
K. Photo Cell 5-5
L. Conduit 5-5
M. Electrical Equipment and Work 5-6
5-8 MASTER PLANNING 5-6

SECTION 5

STREET LIGHT DESIGN

5-1 STREET LIGHTS REQUIRED -- Street lights shall be required for all lots and parcels being developed or constructed upon unless excepted by Section 5-2. In addition, street lights may be required for lots and parcels containing existing structures which are being improved or altered, depending on the nature and extent of the work. Illustrations of street lights generally required are shown on Standard Drawing 5-1.

5-2 STREET LIGHTS NOT REQUIRED-- Street lights shall not be required under the following circumstances:

A. Single family residential subdivisions having an average lot street frontage of more than 125 feet will not be required to install a street light system along the streets, but shall as a minimum, be required to install street lights at all intersections, cul-de-sacs, and other locations deemed by the Director to be essential for safety.

B. For planned developments, residential, commercial, and industrial developments where the internal streets are not offered for dedication, a street lighting system will not be required for the internal non-dedicated streets, but shall be provided by the developer on the external public street frontage.

5-3 DEVELOPER'S RESPONSIBILITY -- Existing street lights which must be relocated or repositioned as a result of the construction of new streets or driveways into a development shall be the responsibility of the developer.

A new service can with a step-down transformer, required as a result of the modification, replacement or relocation of an existing utility service pedestal, shall be the responsibility of the developer.

It shall be the responsibility of the developer to insure that the power shall remain to the existing street light system until the new street light system to replace it is completed and functioning correctly.

5-4 UTILITY COMPANY AUTHORIZATION -- A written notice from the serving utility company, stating that line clearances and service have been checked and are adequate, shall be submitted to the Director for all developments.

5-5 GENERAL PLAN DETAILS -- The plans shall show and identify all street lights to be installed, all existing lights in the immediate vicinity of the project, all conduit and conductor runs, service points, trees, and all applicable provisions and details specified in these standards.

On subdivision plans, the street lights shall be shown separately. In addition to the above, the following shall be required on the street light portion of subdivision plans, even though duplications may be involved:

- A signature block conforming to Standard Drawing G-1
- A vicinity map or equivalent
- Utility poles and public utility easements
- Names of adjacent subdivisions
- Intersecting property lines of adjacent properties
- A legend conforming to Standard Drawing 5-1
- A North arrow and appropriate scale (1"=10' to 1"=100')
- All existing street lights on both sides of any streets
- All new tree installations shall be more than 10' from street lights
- All trees within the vicinity of the conduit runs or proposed street lights.

5-6 DESIGN STANDARDS -- Street lighting shall be designed in conformance with these specifications, the current edition of the Sacramento County Standard Construction Specifications, and the "American National Standard Practice for Roadway Lighting" of the American Standards Institute, except that the average horizontal maintained foot candles for the various street classifications shall be as shown on Standard Drawing 5-2. Data and calculations supporting the satisfaction of the above requirements shall be submitted for review, or the predetermined design standards included herein shall apply.

5-7 STREET LIGHT DESIGN DETAILS -- Design details for street lights are as follows:

A. Intersections -- Intersections shall have at least one street light. Intersection street light locations and the number required shall conform to Standard Drawings 5-3 and 5-4.

B. Cul-de-sacs -- All cul-de-sacs exceeding 130 feet in length, measured from the street light location at the intersection to the right-of-way line at the end of the cul-de-sac, shall have a street light within the bulb. The location of the street light within the bulb shall conform to Standard Drawing 5-4.

C. Pedestrian Lanes -- Street lights shall be placed at both ends of pedestrian lanes.

D. Spacing -- Maximum street light spacing, measured along the street centerline, shall conform to Standard Drawing 5-5, except on arterial and thoroughfare streets

with a 1,000-foot or smaller radius horizontal curve, in which case the maximum spacing is 170 feet. Note that on Standard Drawing 5-5, light spacing for 84-foot, 108-foot, and 130-foot streets is based on a one-side arrangement. Spacing on all other streets is based on a two-side arrangement. The one-side spacing arrangement is a system whereby the street light spacing relates to the distance between street lights all on the same side of the street. The two-side arrangement relates to the distance between street lights taking into consideration the street lights on both sides of the street. The actual constructed street type and right-of-way width shall be the controlling factor for determination of street light spacing rather than the street classifications (arterial, collector, etc.).

E. Street Light Poles -- All street light poles shall be of galvanized steel, aluminum or concrete, except as provided for by Item "F" below. All pole construction and materials shall conform to the standards outlined in the Standard Construction Specifications, Section SS108-07, "Lighting Poles", and the Standard Drawings contained therein. Poles shall be identified on the plans or in the special provisions. Identification shall be by "pole series catalog numbering procedure" as shown in the Standard Construction Specifications for galvanized steel poles, or by construction material, bolt circle diameter, luminaire mounting height, pole dimensions and length of mast arm for other approved poles.

The Director may approve special or unusual designs if warranted by the character of the surrounding neighborhood. Where special or unusual design street light poles not specified in the Standard Construction Specifications are to be used, the developer shall supply additional poles to the County for future pole replacement. The minimum number of replacement poles to be supplied to the County shall be 10% of the poles being installed with any fractional percent rounded up to the next whole number.

The position of the street light poles shall conform to Standard Drawings 5-3, 5-4, and 5-6.

F. Street Lights on Existing Utility-Owned Poles -- Where there are permanent existing (or necessary planned) utility owned poles adjacent to the roadway, the street lights may be installed upon the utility pole in lieu of the poles required. Should the utility pole option be utilized, the following shall apply:

1. In the Sacramento Municipal Utility District (SMUD) service area, the developer shall arrange to install County-owned/utility-maintained street lights on existing utility poles in accordance with SMUD Rate F52.

2. In the Pacific Gas and Electric Company (PG&E) service area, the developer shall arrange to install PG&E owned and maintained street lights on existing utility poles in accordance with PG&E Rate LS-1.

3. Spacing of lights shall be varied to meet locations of existing utility poles, but shall not exceed the maximum spacing specified by Standard Drawing 5-5. Street light mounting heights shall be as shown on Standard Drawing 5-5. All luminaires shall have wattages relating to the street classification requirements shown on Standard Drawing 5-5.

G. Luminaires and Ballasts –

1. Luminaires shall be high pressure sodium type with internal ballasts. The type of street light and the appropriate wattage shall be specified on the plans. All luminaires shall conform to the standards outlined in the Standard Construction Specifications, Section SS108-08, "Luminaires", except that light distribution shall be ANSI type III and that luminaires shall be cut-off type unless specified otherwise by the Engineer.

   The light pattern for each luminaire shall be specified on the plans. The light pattern for each luminaire shall be obtained from Standard Drawings 5-3, 5-4, and 5-5.

2. Ballasts shall conform to the standards outlined in the Standard Construction Specifications, Section SS108-08 and SS108-10 except that for 100-watt high pressure sodium luminaires the ballast shall be energy efficient.

H. Service -- All street light systems shall have underground service provided. Service points shall be provided within a utility easement immediately adjacent to or within the right-of-way and shall be open and easily accessible to the street frontage. Types of service are as follows:

1. The Director may approve overhead service in unusual areas where there is reason to believe it cannot be provided underground.

2. A direct underground service consists of one light being served from a single service point. New lights on developments adjacent to existing development shall connect to the existing service point. The service point may be in the form of a pullbox installed by the developer or a service pedestal provided by the utility district. See Standard Drawing 5-7 for commercial and residential requirements.

3. Multiple service is two or more lights being served from a single service point installed by the developer. The service point shall be a pullbox. Multiple systems shall have a service can normally located adjacent to the service point, between the service point and the light system. The service can and details shall conform to Standard Drawings 5-8, 9, 10, 11, and 12.

I. Pullboxes -- All pullboxes, including the size, shall be shown and identified on the plans. Pullboxes shall be installed at all locations where more than two conduit runs intersect, where conduit runs are more than 250 feet long, where shown on County Standard Drawings, at critical angle points, at property lines at the end of the required conduit run to the property line (see Section 5-7(L), "Conduit"), behind each light when No. 4 A.W.G. conductors are used, and at such locations ordered by the Director. Normally a No. 3-1/2 pullbox will be allowed when three or fewer conduits of 1-1/4" or smaller size are involved or at the end of the required conduit run to the property line (See Section 5-7(L), "Conduit").

J. Conductors -- All conductors, including quantity and size, shall be identified on the plans. Unless otherwise specified, conductors shall be single conductor, solid or stranded copper, sized in accordance with these standards and the National Electrical Code.

1. On a direct underground service, the minimum conductor shall be No. 8 A.W.G. In general, no conductor shall be larger than No. 4 A.W.G.

2. On multiple service, the minimum conductor size from the service point to the service can shall be No. 8 A.W.G. The size of each conductor from the service point to the luminaires shall be such that the voltage drop along each circuit will not exceed 7% for 2-wire systems and 6% for 3-wire systems of the nominal service voltage to the farthest luminaire. The nominal service voltage to be used is 115 volts. Calculations shall be submitted substantiating the design criteria for every circuit. Calculations shall also be submitted showing the total load in amperes of each circuit at the service can. See Standard Drawing 5-13 or 5-14 for typical calculations.

   In lieu of the submission of design criteria calculations, the conductor size and the circuit breaker amperage may be obtained from Standard Drawings 5-13, 5-14, and 5-15.

   Where only one photo cell is required in a multiple service system, it shall be connected to the service can with three No. 14 A.W.G. conductors.

K. Photo Cell -- A single photo cell receptacle shall be provided on the luminaire nearest to the service point for multiple service containing four or more lights. All other light systems shall have a photo cell in each luminaire.

L. Conduit -- All conduit runs, including the size, shall be shown and identified on the plans. The conduit size shall be determined using Standard Drawing 5-15 as a guideline, with the minimum size being one and one half inch diameter conduit.

For a system designed using the 3-wire system, only 2 circuits (one set of 3 wires) shall be allowed in any conduit. Circuits based on the 2-wire system and the 3-wire system shall not be mixed in any conduit. All circuits may, however, be mixed in the same conduit from the service can to the first pull box.

The design may include more than two circuits in a conduit if the conductors for each circuit (2-wire) or set of circuits (3-wire) are identified by conductor insulation which is a solid color or a basic color with a permanent colored stripe. The identification stripe shall be continuous over the entire length of the conductor.

New development shall install one-and-one-half-inch conduit, or larger as required, with one No. 10 A.W.G. stranded pullwire from the last light on each end of the system to the adjacent property line, where the adjacent property has no existing street lighting system.

M. Electrical Equipment and Work -- Control and switching equipment and fusing of all circuits shall meet the requirements of the National Electrical Code, the Basic Electrical Regulations, Title 24, Part 3, of the California Administrative Code, the rules of the National Board of Fire Underwriters, and the County of Sacramento.

5-8 MASTER PLANNING -- Master planning is the determination of street light locations between control points. Control points are proposed street light locations at street intersections in accordance with Section 5-8 and Standard Drawings 5-3, 5-4, and 5-5, and existing street lights. The purpose of master planning is to establish an overall uniform street light system meeting minimum requirements. On 84-foot, 108-foot, and 130-foot streets, master planning shall apply to only one side of the street. On all other streets, master planning shall apply to both sides of the street. The procedure for master planning is outlined as follows:

A. Identify the nearest intersections each way from the street light locations being planned. Determine the location of the street lights at the intersections in conformance with the design standards in Section 5-8 above.

B. Identify any existing street lights situated between the intersections.

C. Determine the distance between the adjacent designed intersection street lights and/or adjacent existing street lights, whichever are nearest to the street light locations being planned.

D. Divide the distance into equal spaces between lights not to exceed the maximum spacing requirements specified in Section 5-8 above.

E. Compare the light locations to intersecting property lines, driveways, pedestrian lanes, and other obstructions as follows:

1. If the location falls close to a property line and it can be adjusted to the property line while staying within the maximum spacing allowed, then the adjustment should be made.

2. Generally, street lights should be situated at intersecting property lines for residential lots and parcels with minimal frontage (75 feet or less). The light spacing may have to be unbalanced, with additional lights being added to attain this and still comply with the maximum spacing allowed.

3. Street light locations shall be adjusted to miss driveways, existing utility poles, and other obstructions by five feet.

F. Where utility-owned poles with overhead electric power lines are existing, the serving utility company shall be contacted to determine if the street lights can be installed on the poles. When a street light location falls within 25 feet of an existing electric power pole, arrangements should be made for the utility company to install the light on their pole.

G. Street light locations on 84-foot, 108-foot, and 130-foot streets should be adjusted, when possible, to obtain a more uniform light distribution if there are existing street lights on the opposite side of the street.

TYPICAL STREET LIGHTS

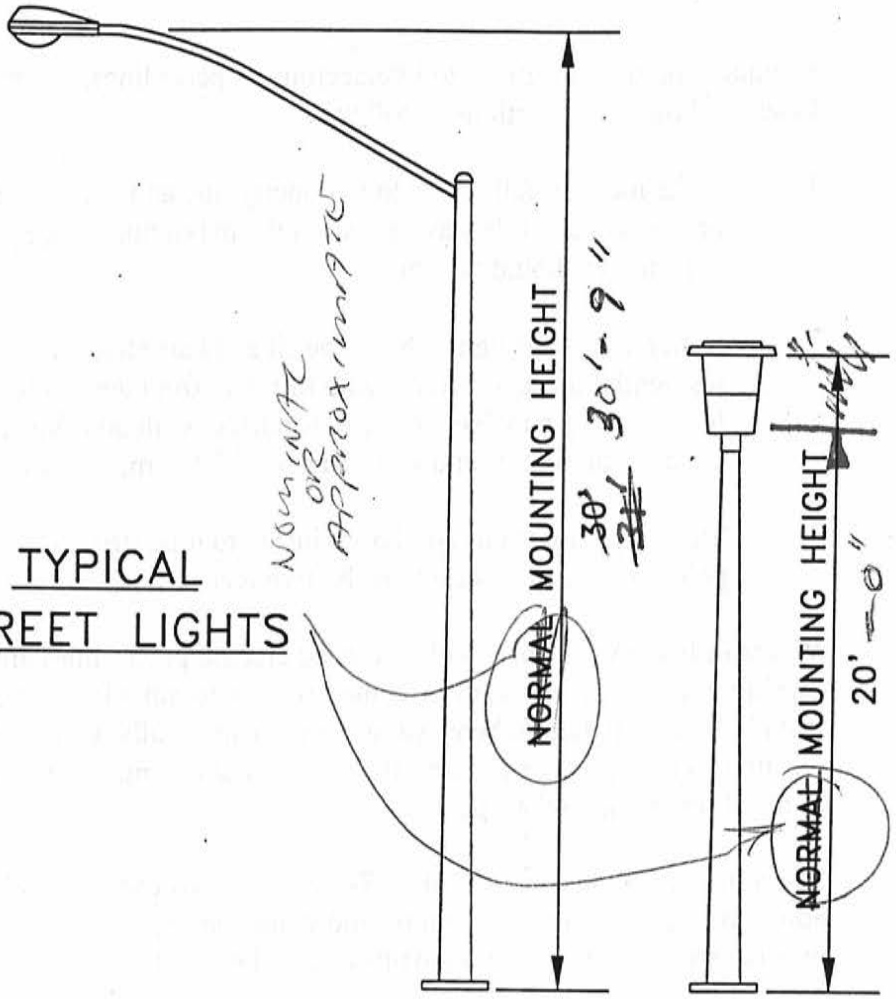

SYMBOLS

PROPOSED	EXISTING	
		Type "A"
		Type "B"
		Pullbox
		Conduit
		Service Can
		U.G. Utility Service Pedestal
		Transformer
		Wood Pole

Cheryl Creson
DIRECTOR

COUNTY OF SACRAMENTO
PUBLIC WORKS AGENCY
TRANSPORTATION DIVISION

STREET LIGHTING POLES AND SYMBOLS

SCALE: NONE
DATE: 12/98
DRAWN BY:

5-1

STREET CLASSIFICATION	ST. TYPE & R/W WIDTH	TYPE STREET LIGHT	NORMAL MOUNTING HEIGHT	AVERAGE MAINTAINED FOOTCANDLE	MAINTENANCE FACTOR
SPECIAL THOROUGHFARE	130'	A	30'	.57	.65
THOROUGHFARE	108'	A	30'	.56	.65
ARTERIAL	84'	A	30'	.36	.65
MAJOR COLLECTOR	74'	A	30'	.36	.65
	70'	A	30'	.36	.65
COLLECTOR	60'	A	30'	.26	.65
	* 56'	B	20'	.14	.70
RESIDENTIAL	50'	B	20'	.13	.70
	40'	B	20'	.12	.70
PEDESTRIAN LANE	---	B	14'	.17	.70

1. Lumens used to calculate the Average Maintained Footcandle shall be 80% of initial lumen valve rated by the lamp manufacturer.

*2. Use 60 foot street lighting design for 56 foot industrial streets.

Cheryl Crean
DIRECTOR

COUNTY OF SACRAMENTO
PUBLIC WORKS AGENCY
TRANSPORTATION DIVISION

STREET LIGHTING DESIGN CRITERIA

SCALE: NONE
DATE: 1/89
DRAWN BY: B.F./M.T.

5-2

STREET LIGHT PLACEMENT ON SPECIAL THOROUGHFARES, THOROUGHFARES & ARTERIALS

(130,108, AND 84' FOOT STREETS)

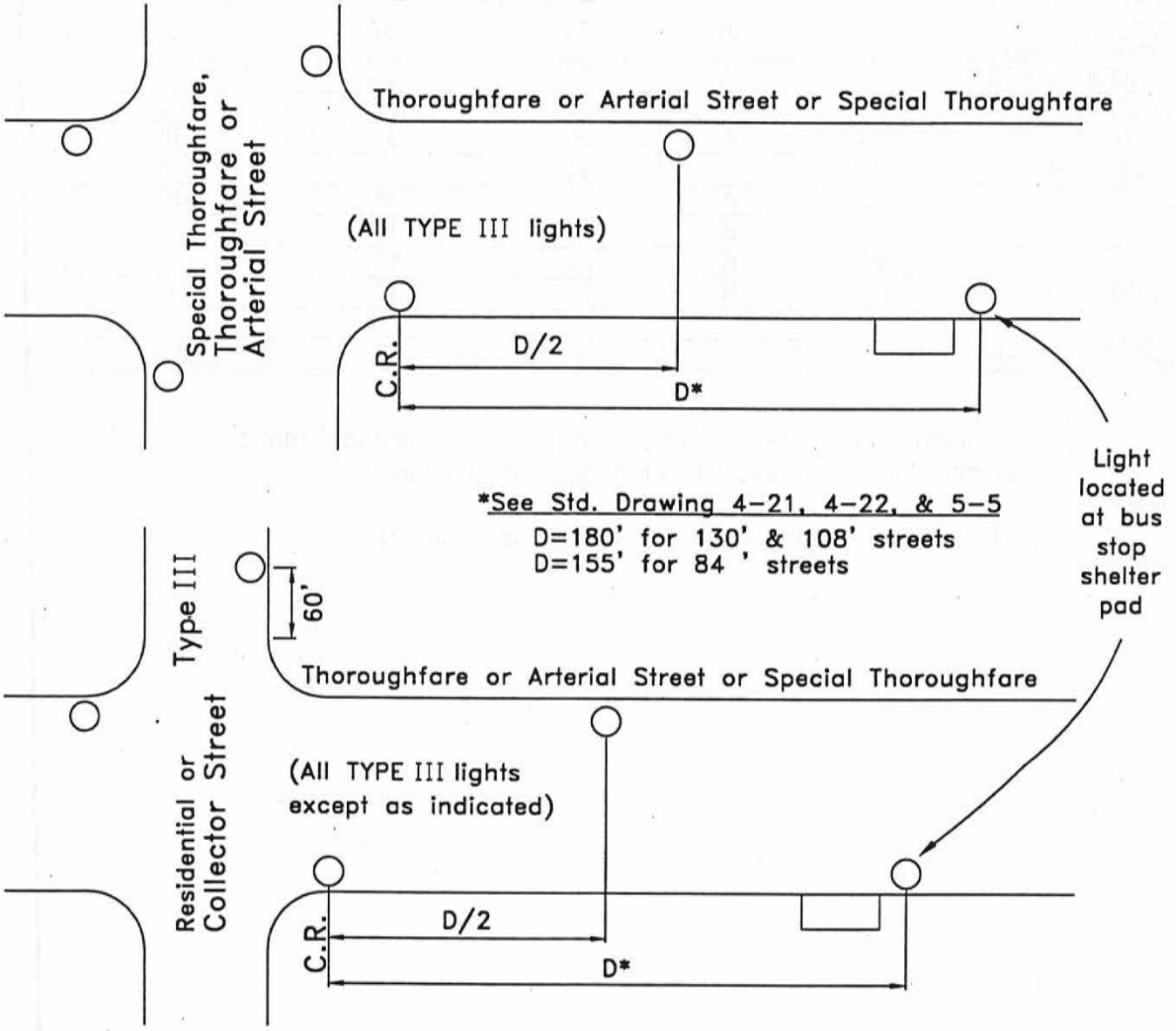

Cheryl Creson
DIRECTOR

COUNTY OF SACRAMENTO
PUBLIC WORKS AGENCY
TRANSPORTATION DIVISION

TYPICAL STREET LIGHT LOCATIONS THOROUGHFARES AND ARTERIALS

SCALE: NONE
DATE: 12/98
DRAWN BY:

5-3

STREET LIGHT PLACEMENT
ON
COLLECTOR & RESIDENTIAL STREETS
(INCLUDES ALL STREETS OTHER THAN 130,108' & 84' STREETS)

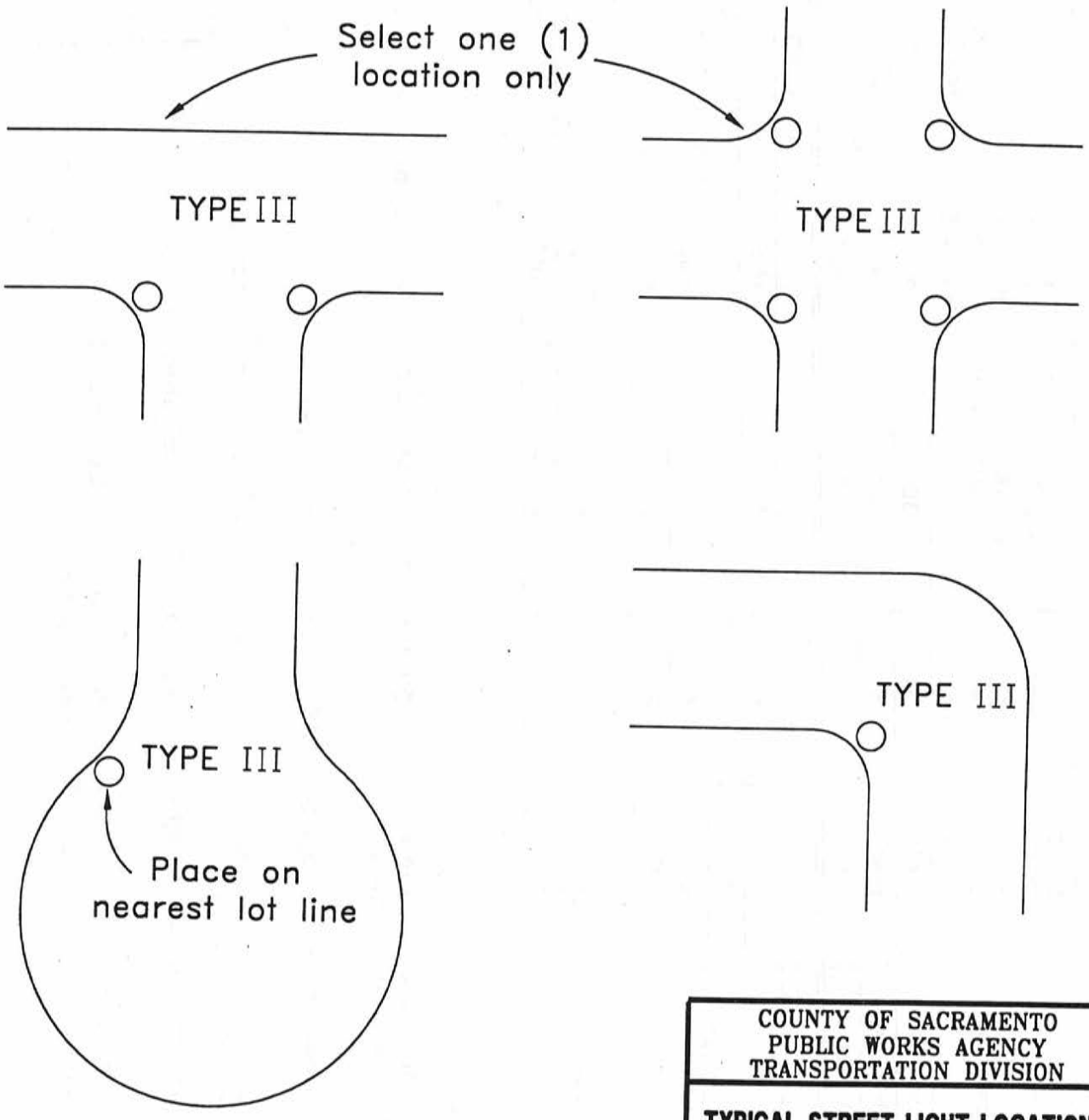

Cheryl Crosson
DIRECTOR

COUNTY OF SACRAMENTO PUBLIC WORKS AGENCY TRANSPORTATION DIVISION	
TYPICAL STREET LIGHT LOCATIONS **COLLECTOR AND RESIDENTIAL**	
SCALE: NONE DATE: 12/98 DRAWN BY:	**5-4**

STREET CLASSIFICATION	STREET TYPE AND R/W WIDTH	TYPE STREET LIGHT	NORMAL MOUNTING HEIGHT	HIGH PRESSURE SODIUM LAMP WATTAGE	FRONT ON LOT	BACK ON LOT	LIGHT DISTRIBUTION PATTERN MIDBLOCK LOCATION
					SPACING (ONE SIDE ONLY)		
SPECIAL THOROUGHFARE	130'	A	30'	250'	180'	180'	III
THOROUGHFARE	108'	A	30'	250'	220'	220'	III
ARTERIAL	84'	A	30'	150'	220'	250'	III
					SPACING (BOTH SIDES)		
COLLECTOR	74'	A⊕	30'	150'	220'		III
	70'	B	30'	150'	220'		
	60'	A⊕	30'	150'	220'		III
	* 56'	B	20'	100'	180'		
RESIDENTIAL	50'	B	20'	100'	200'		III
	42'	B	20'	100'	240'		III
	40'	B	20'	100'	240'		III

1. Lamp wattage shown is for high pressure sodium lamp only. Design criteria must be submitted for all other lamps.

2. Spacing may be adjusted ±10% to allow for driveways.

3. Back–on lot spacing may be adjusted to 330 ft. if both sides of the street are lighted.

* 4. Use 60 foot street lighting design for 56 foot industrial streets.

⊕ 5. Single family and duplex family zoning shall be type "B" street light (100 watt). 20' mounting height.

Cheryl Creason
DIRECTOR

COUNTY OF SACRAMENTO
PUBLIC WORKS AGENCY
TRANSPORTATION DIVISION

STREET LIGHT POLE SPACING GUIDE

SCALE: NONE
DATE: 12/98
DRAWN BY:

5-5

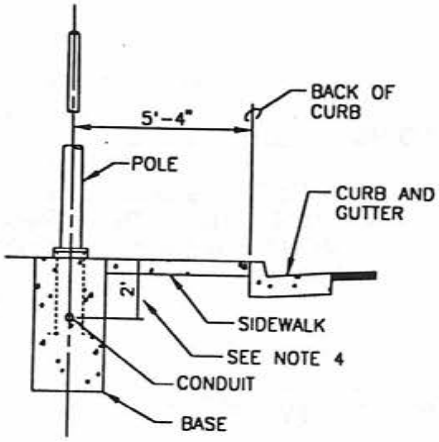

4' to 6' SIDEWALK

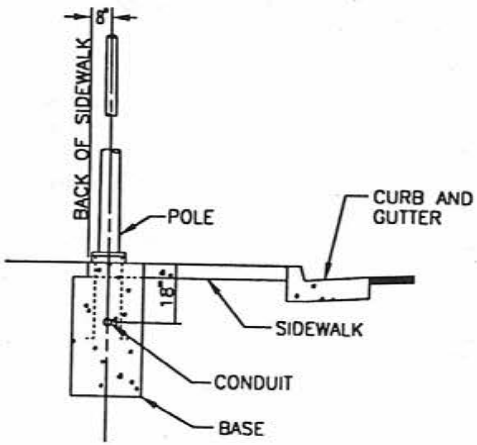

OVER 6' SIDEWALK

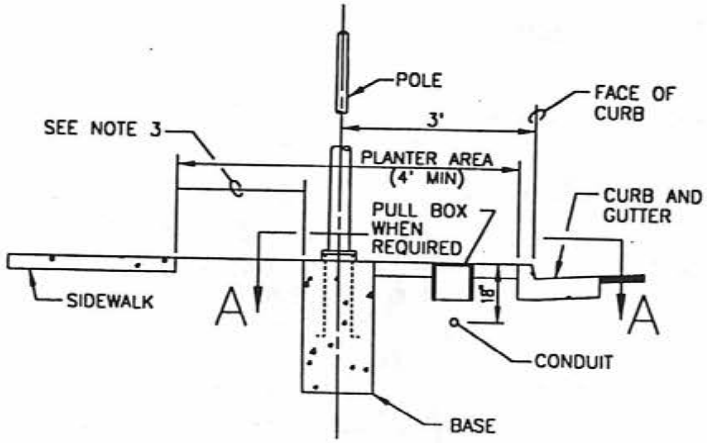

SIDEWALK WITH PLANTER AREA

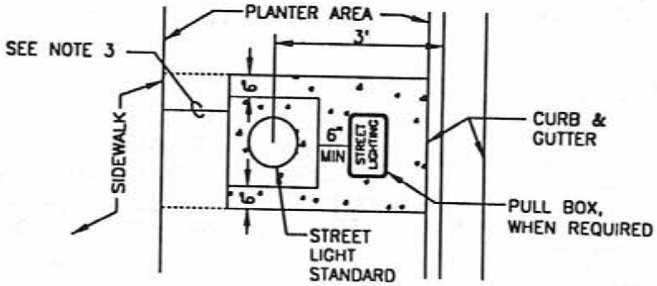

SECTION A-A

NOTES:

1. CONDUIT TRENCH BACKFILL SHALL BE COMPACTED TO 90% RELATIVE COMPACTION.
2. LANDSCAPING IN THE AREA OF THE STREET LIGHT STANDARD WILL MATCH BASE ELEVATION AND HAVE A MINIMUM OF 12" OF CLEARANCE FROM THE BASE.
3. IF THIS LENGTH IS 12" OR LESS, PLACE 3-1/2" THICK PCC CONCRETE FROM STREET LIGHT BASE TO FACE OF SIDEWALK. WIDTH TO MATCH CONCRETE AROUND STREET LIGHT FOUNDATION.
4. IF CONDUIT IS LOCATED BENEATH THE SIDEWALK, IT MAY BE PLACED AT 18" DEPTH INSTEAD OF 2'.

Cheryl Creson
DIRECTOR

COUNTY OF SACRAMENTO
PUBLIC WORKS AGENCY
TRANSPORTATION DIVISION

SIGNAL, LIGHTING AND ELECTRICAL SYSTEMS
BASE LOCATION FOR STREET LIGHT

SCALE: NONE
DATE: 12/98
DRAWN BY:

5-6

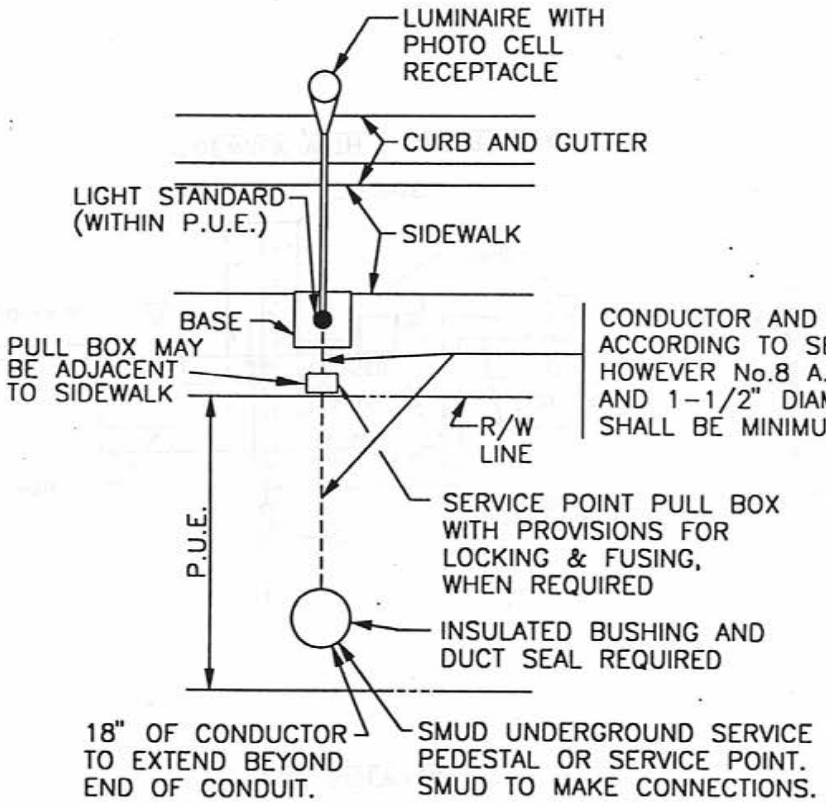

RESIDENTIAL SERVICE

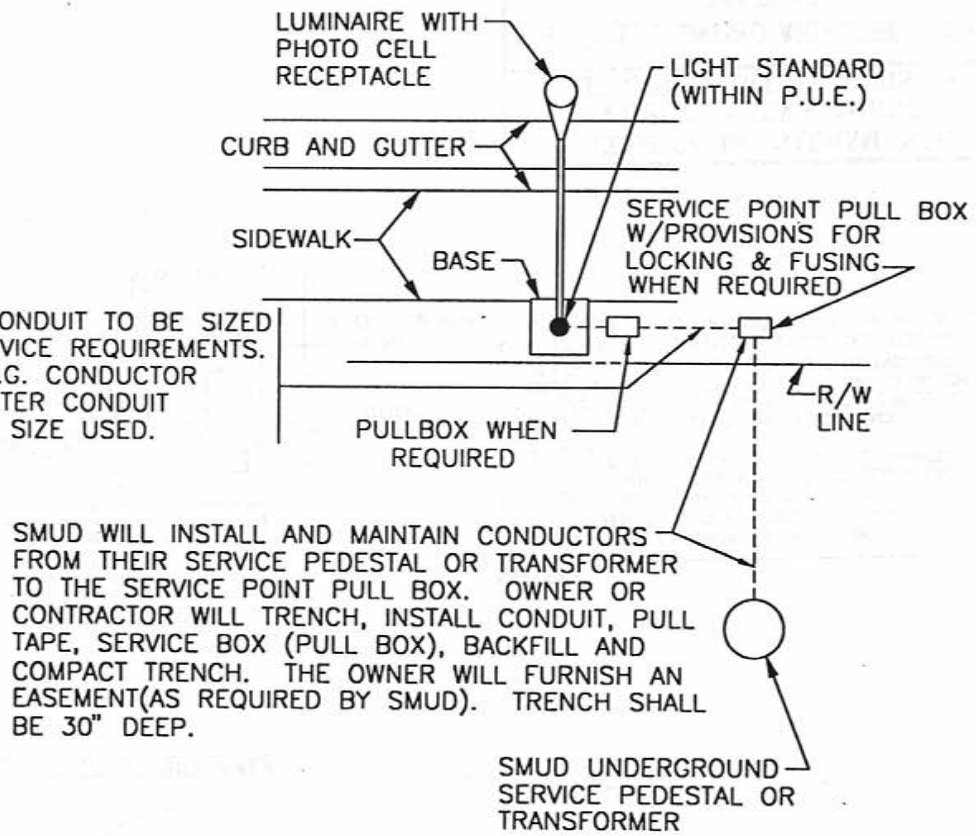

COMMERCIAL SERVICE

NOTES:

1. CONNECT NEUTRAL CONDUCTOR TO GROUNDING ELECTRODE IN SERVICE POINT PULL BOX.
2. ALL FACILITIES SHALL BE WITHIN RIGHT-OF-WAY OR PUBLIC UTILITY EASEMENT.
3. CONDUIT TO TERMINATE 2" BELOW BOTTOM OF HANDHOLE.
4. SEE SHEET 5-20 AND 5-12 FOR STREET LIGHT SERVICE POINT PULL BOX DETAILS.

Cheryl Crissom
DIRECTOR

COUNTY OF SACRAMENTO
PUBLIC WORKS AGENCY
TRANSPORTATION DIVISION

SIGNAL, LIGHTING AND ELECTRICAL SYSTEMS
DIRECT SERVICE INSTALLATION TO STREET LIGHTING STANDARD

SCALE: NONE
DATE: 12/98
DRAWN BY:

5-7

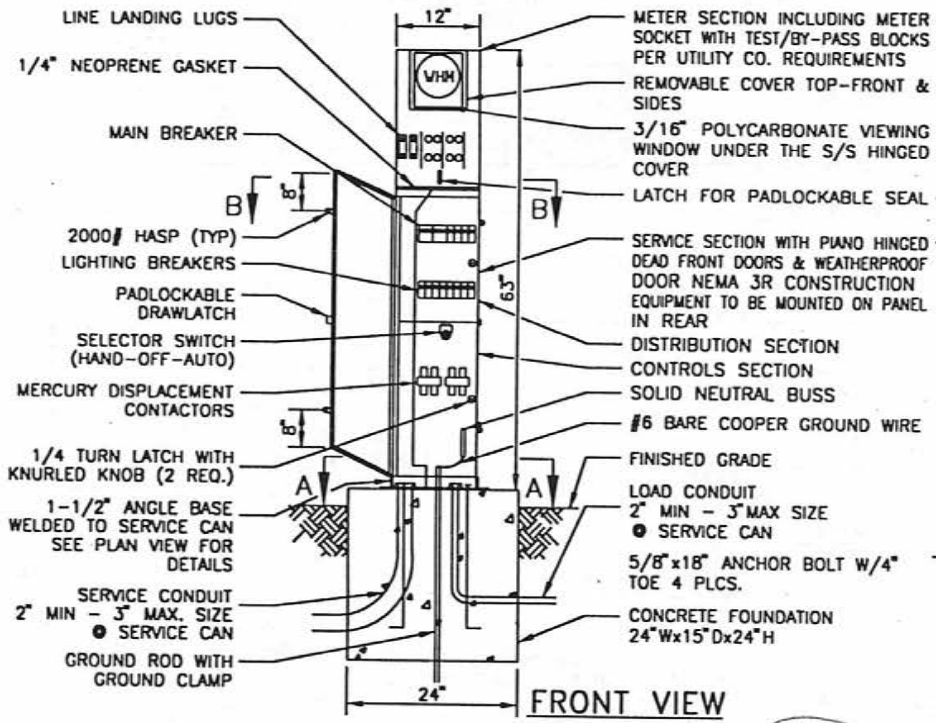

FRONT VIEW

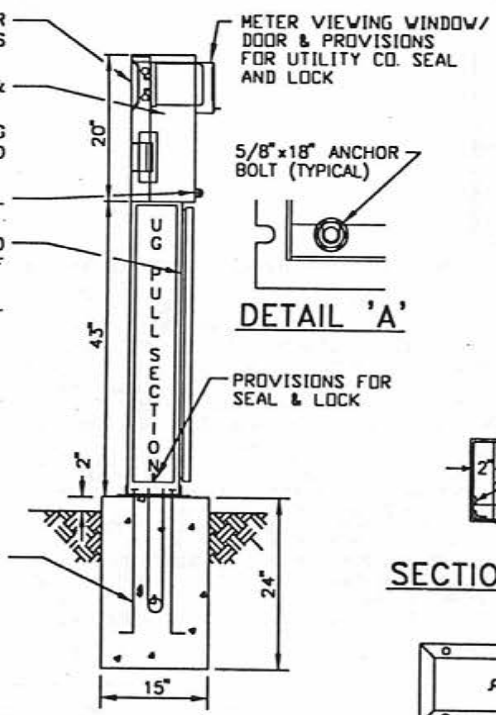

LEFT SIDE

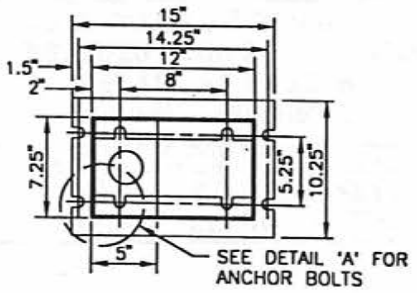

FRONT
BASE PLATE DETAIL

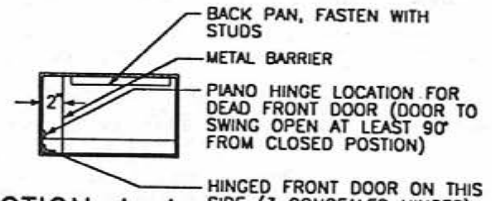

SECTION A-A

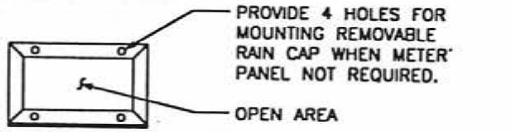

SECTION B-B

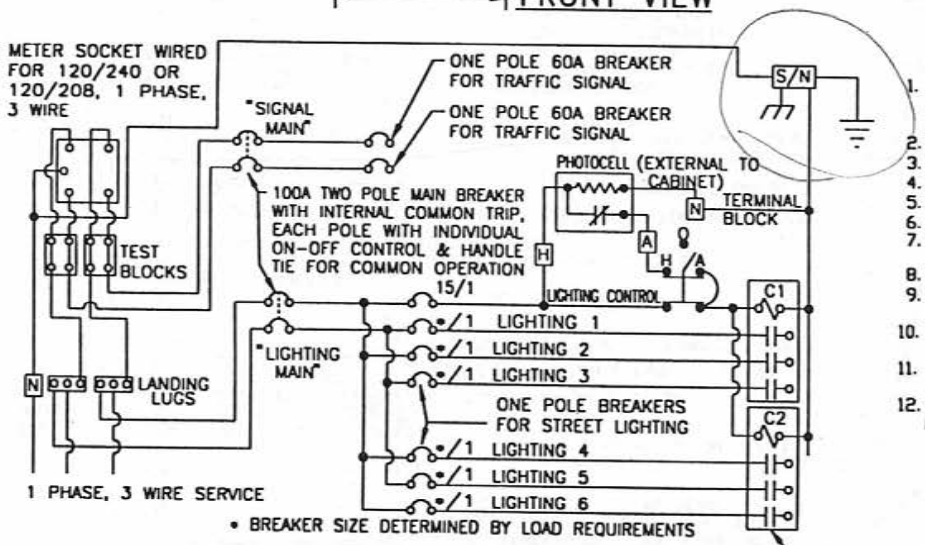

METERED SERVICE
WIRING SCHEMATIC DIAGRAM

1. EXTERIOR 14 GAUGE #304D STAINLESS STEEL, INTERIOR DEAD FRONT PANEL AND BACK PAN SHALL BE 14 GAUGE STEEL PAINTED WHITE ELECTRICALLY WELDED AND REINFORCED WHERE REQUIRED.
2. CONSTRUCTION IS NEMA 3R AND 12, RAINTIGHT AND DUSTTIGHT.
3. ALL NUTS, BOLTS, SCREWS AND HINGES SHALL BE STAINLESS STEEL.
4. NUTS, BOLTS & SCREWS ARE NOT USED ON THE OUTSIDE OF SERVICE CAN.
5. PHENOLIC NAMEPLATES TO IDENTIFY ALL OPERATOR CONTROLS
6. CONTROL WIRING WILL BE MARKED AT BOTH ENDS BY PERMANENT WIRE MARKERS.
7. A PLASTIC COVERED WIRING DIAGRAM WILL BE ATTACHED TO THE INSIDE OF THE FRONT DOOR.
8. SERVICE CAN WILL BE FACTORY WIRED AND CONFORM TO REQUIRED NEMA STANDARDS.
9. SERVICE CAN(S) WILL BE U.L. LISTED AS INDUSTRIAL CONTROL PANELS U.L. 508 FILE NO. E62062
10. WIRING BETWEEN CIRCUIT BREAKER AND CONTACTOR SHALL BE A #6 THWN OR THHN MINIMUM.
11. SERVICE SHALL BE OF TWO PIECE CONSTRUCTION.
12. SEE STANDARD SPECIFICATIONS FOR ADDITIONAL DETAILS.

Cheryl Creson
DIRECTOR

COUNTY OF SACRAMENTO
PUBLIC WORKS AGENCY
TRANSPORTATION DIVISION

SIGNAL, LIGHTING AND ELECTRICAL SYSTEMS
METERED SERVICE CAN (120/208/240)

SCALE: NONE
DATE: 12/98
DRAWN BY:

5-8

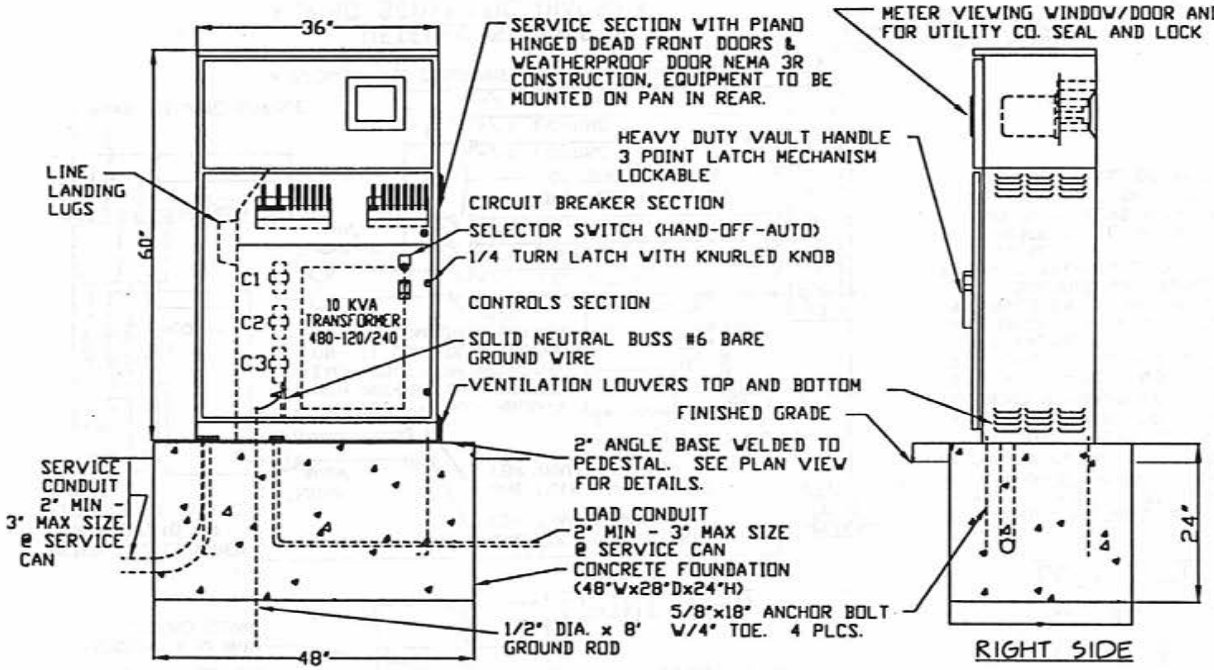

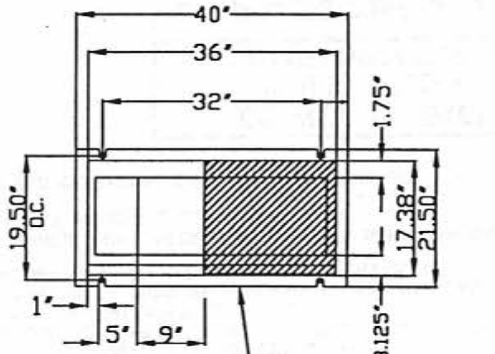

FRONT PLAN VIEW

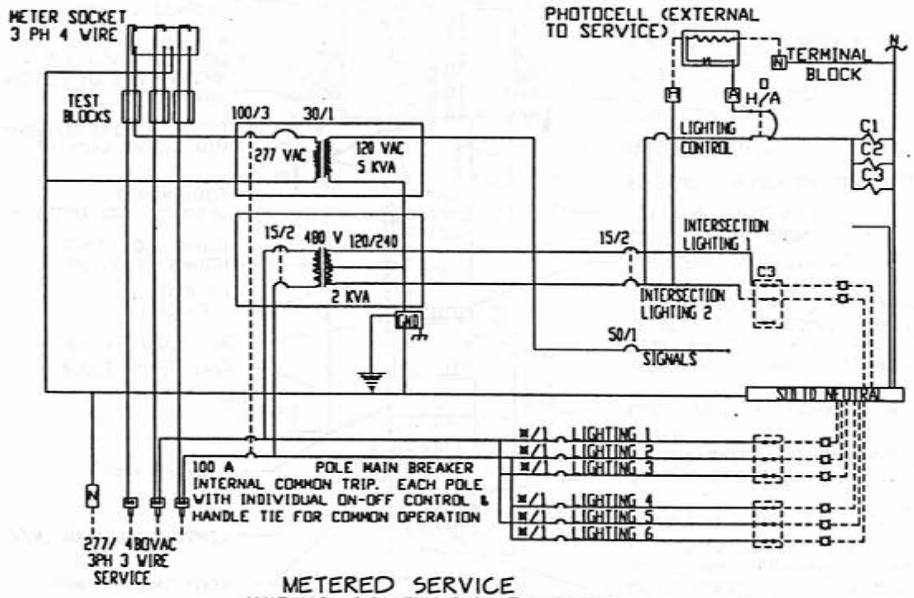

METERED SERVICE WIRING SCHEMATIC DIAGRAM

1. EXTERIOR 14 GAUGE #304D STAINLESS STEEL, INTERIOR 14 GAUGE STEEL PAINTED WHITE ELECTRICALLY WELDED AND REINFORCED WHERE REQUIRED.
2. CONSTRUCTION IS NEMA 3R AND 12, RAINTIGHT AND DUSTTIGHT.
3. ALL NUTS, BOLTS, SCREWS, AND HINGES SHALL BE STAINLESS STEEL.
4. NUTS, BOLTS, AND SCREWS ARE NOT USED ON THE OUTSIDE OF THE SERVICE CAN.
5. PHENOLIC NAMEPLATES TO IDENTIFY ALL OPERATION CONTROLS.
6. CONTROL WIRING WILL BE MARKED AT BOTH ENDS BY PERMANENT WIRE MARKERS.
7. A PLASTIC COVERED WIRING DIAGRAM WILL BE ATTACHED RO THE INSIDE OF THE FRONT DOOR.
8. SERVICE CAN WILL BE FACTORY WELDED AND CONFORM TO REQUIRED NEMA STANDARDS.
9. SERVICE CAN(S) WILL BE U.L. LISTED AS INDUSTRIAL CONTROL PANELS U.L. 508 FILE NO. E62062
10. WIRING BETWEEN CIRCUIT BREAKER AND CONTACTOR SHALL BE A #6 THWN OR THHN MINIMUM.
11. TRANSFORMER SIZE SHALL BE 10 KVA UNLESS OTHERWISE NOTED IN THE SPECIAL PROVISIONS.
12. WHEN CHANGING VOLTAGE ON A RETROFIT PROJECT WHERE A NEW SERVICE CAN WITH A STEP-DOWN TRANSFORMER IS REQUIRED, THE NEW SERVICE CAN SHALL PLACED BETWEEN THE TRANSFORMER AND THE OLD SERVICE CAN LOCATION WITHIN THE COUNTY R/W. VOLTAGE OUT PUT FROM THE NEW SERVICE CAN MAY BE CONNECTED IN TO THE EXISTING CONDUIT SYSTEM.
13. SEE STANDARD APECIFICATIONS FOR ADDITIONAL DETAILS.

Cheryle Crosse
DIRECTOR

COUNTY OF SACRAMENTO
PUBLIC WORKS AGENCY
TRANSPORTATION DIVISION

SIGNAL, LIGHTING AND ELECTRICAL SYSTEMS
METERED SERVICE CAN WITH STEP-DOWN TRANSFORMER

SCALE: NONE
DATE: 12/98
DRAWN BY:

5-9

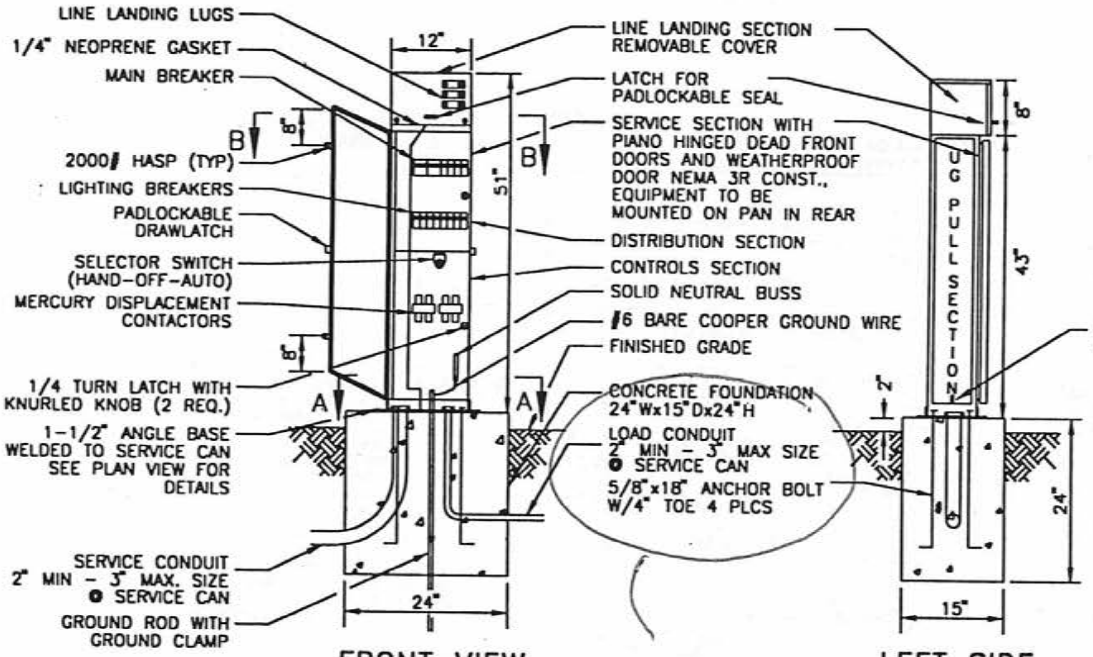

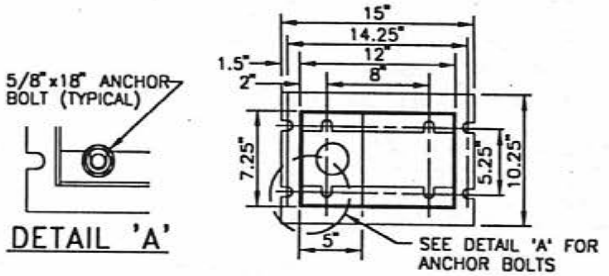

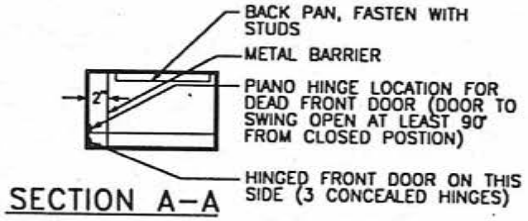

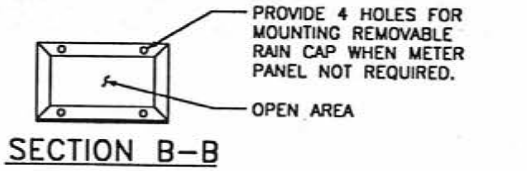

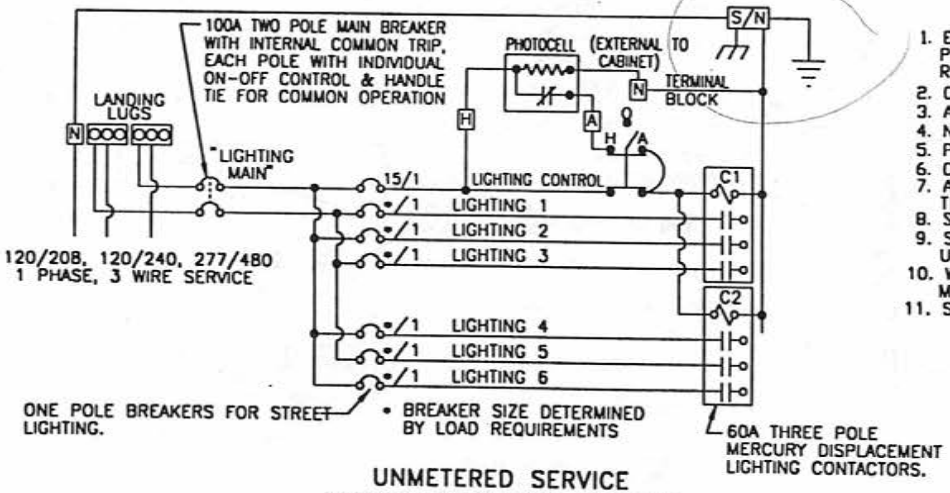

UNMETERED SERVICE
WIRING SCHEMATIC DIAGRAM

1. EXTERIOR 14 GAUGE #304D STAINLESS STEEL, INTERIOR DEAD FRONT PANEL AND BACK PAN SHALL BE 14 GAUGE STEEL PAINTED WHITE ELECTRICALLY WELDED AND REINFORCED WHERE REQUIRED.
2. CONSTRUCTION IS NEMA 3R AND 12, RAINTIGHT AND DUSTTIGHT.
3. ALL NUTS, BOLTS, SCREWS AND HINGES SHALL BE STAINLESS STEEL.
4. NUTS, BOLTS & SCREWS ARE NOT USED ON THE OUTSIDE OF SERVICE CAN.
5. PHENOLIC NAMEPLATES TO IDENTIFY ALL OPERATOR CONTROLS
6. CONTROL WIRING WILL BE MARKED AT BOTH ENDS BY PERMANENT WIRE MARKERS.
7. A PLASTIC COVERED WIRING DIAGRAM WILL BE ATTACHED TO THE INSIDE OF THE FRONT DOOR.
8. SERVICE CAN WILL BE FACTORY WIRED AND CONFORM TO REQUIRED NEMA STANDARDS.
9. SERVICE CAN(S) WILL BE U.L. LISTED AS INDUSTRIAL CONTROL PANELS U.L. 508 FILE NO. E62062
10. WIRING BETWEEN CIRCUIT BREAKER AND CONTACTOR SHALL BE A #6 THWN OR THHN MINIMUM.
11. SEE STANDARD SPECIFICATIONS FOR ADDITIONAL DETAILS.

Cheryl Crosson
DIRECTOR

COUNTY OF SACRAMENTO
PUBLIC WORKS AGENCY
TRANSPORTATION DIVISION

SIGNAL, LIGHTING AND ELECTRICAL SYSTEMS
UNMETERED SERVICE CAN (120/208, 120/240, 277/480)

SCALE: NONE
DATE: 12/98
DRAWN BY:

5-10

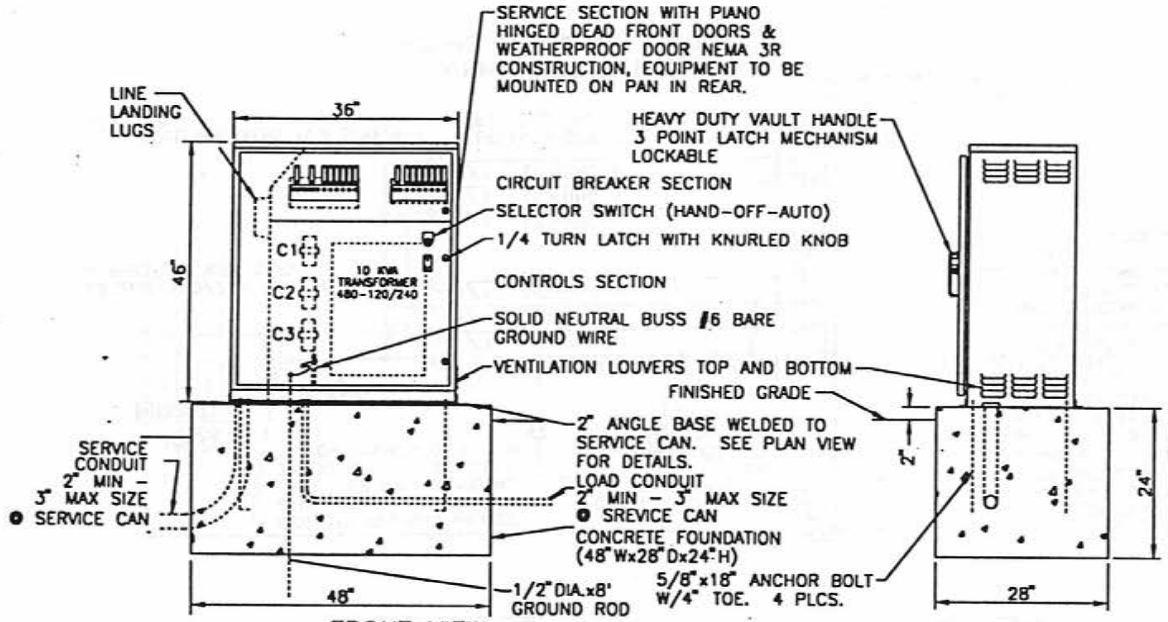

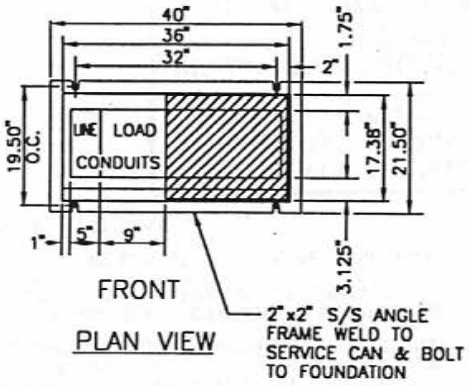

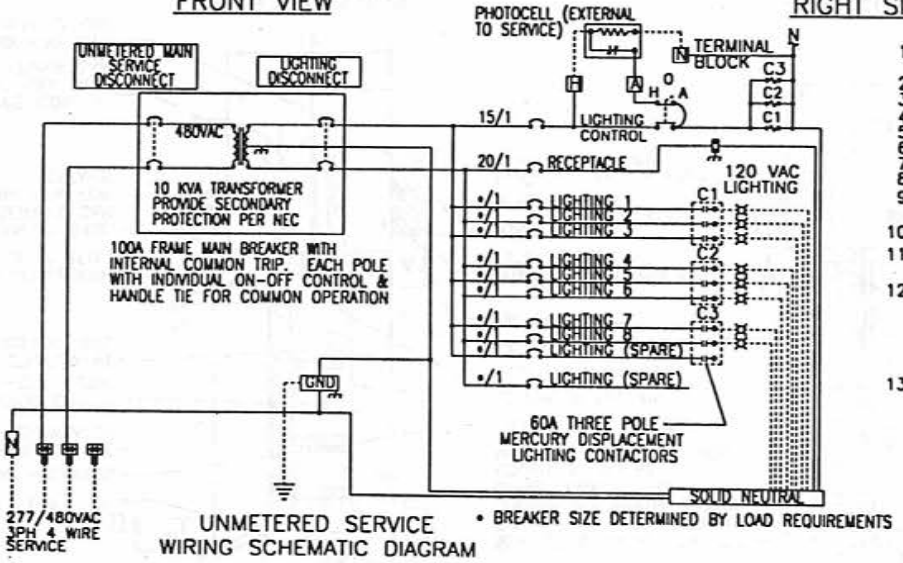

UNMETERED SERVICE
WIRING SCHEMATIC DIAGRAM

• BREAKER SIZE DETERMINED BY LOAD REQUIREMENTS

1. EXTERIOR 14 GAUGE #304D STAINLESS STEEL, INTERIOR 14 GAUGE STEEL PAINTED WHITE ELECTRICALLY WELDED AND REINFORCED WHERE REQUIRED.
2. CONSTRUCTION IS NEMA 3R AND 12, RAINTIGHT AND DUSTTIGHT.
3. ALL NUTS, BOLTS, SCREWS, AND HINGES SHALL BE STAINLESS STEEL.
4. NUTS, BOLTS, AND SCREWS ARE NOT USED ON THE OUTSIDE OF SERVICE CAN.
5. PHENOLIC NAMEPLATES TO IDENTIFY ALL OPERATION CONTROLS.
6. CONTROL WIRING WILL BE MARKED AT BOTH ENDS BY PERMANENT WIRE MARKERS.
7. A PLASTIC COVERED WIRING DIAGRAM WILL BE ATTACHED TO THE INSIDE OF THE FRONT DOOR.
8. SERVICE CAN WILL BE FACTORY WELDED AND CONFORM TO REQUIRED NEMA STANDARDS.
9. SERVICE CAN(S) WILL BE U.L. LISTED AS INDUSTRIAL CONTROL PANELS U.L. 508 FILE NO. E62062
10. WIRING BETWEEN CIRCUIT BREAKER AND CONTACTOR SHALL BE A #6 THWN OR THHN MINIMUM.
11. SEE SPECICAL PROVISIONS FOR TRANSFORMER REQUIREMENTS. PROVIDE PRIMARY AND SECONDARY PROTECTION PER NEC.
12. WHEN CHANGING VOLTAGE ON A RETROFIT PROJECT WHERE A NEW SERVICE CAN WITH A STEP-DOWN TRANSFORMER IS REQUIRED, THE NEW SERVICE CAN SHALL PLACED BETWEEN THE TRANSFORMER AND THE OLD SERVICE CANLOCATED WITHIN THE COUNTY R/W. VOLTAGE OUT PUT FROM THE NEW SERVICE CAN MAY BE CONNECTED IN TO THE EXISTING CONDUIT SYSTEM
13. SEE STANDARD SPECIFICATIONS FOR ADDITIONAL DETAILS.

Cheryl Crason
DIRECTOR

COUNTY OF SACRAMENTO
PUBLIC WORKS AGENCY
TRANSPORTATION DIVISION

SIGNAL, LIGHTING AND ELECTRICAL SYSTEMS
UNMETERED SERVICE CAN WITH
STEP-DOWN TRANSFORMER
(277/480V to 120V)

SCALE: NONE
DATE: 12/98
DRAWN BY:

5-11

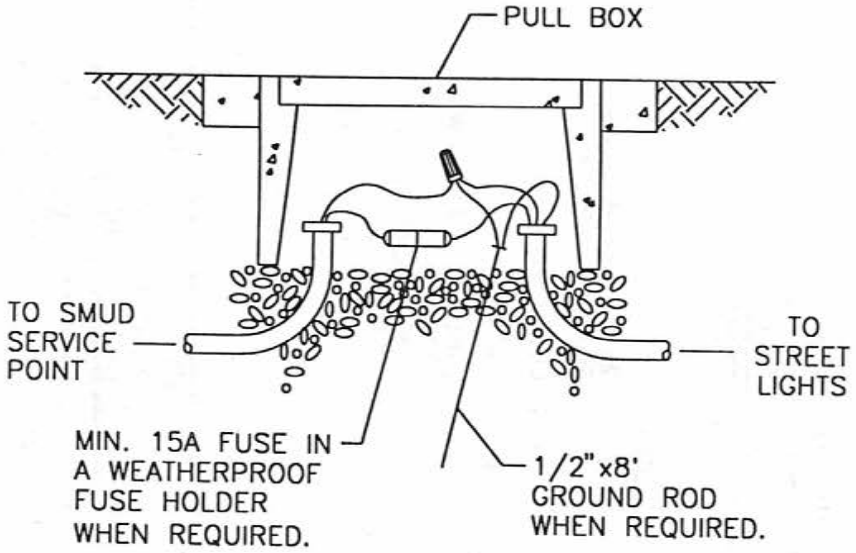

SERVICE POINT PULL BOX DETAILS

LAMP WATTAGE	FUSE SIZE
200 WATT OR LESS	6 AMP
250 WATT–400 WATT	10 AMP

NOTES:

1. FUSE SHALL BE A MIDGET FERRULE TYPE. RATED AT 600 VOLTS.
2. ATTACH GROUND CONDUCTOR TO EACH ELECTROLIER.
3. ALL PULL BOXES SHALL HAVE PROVISIONS FOR LOCKING.

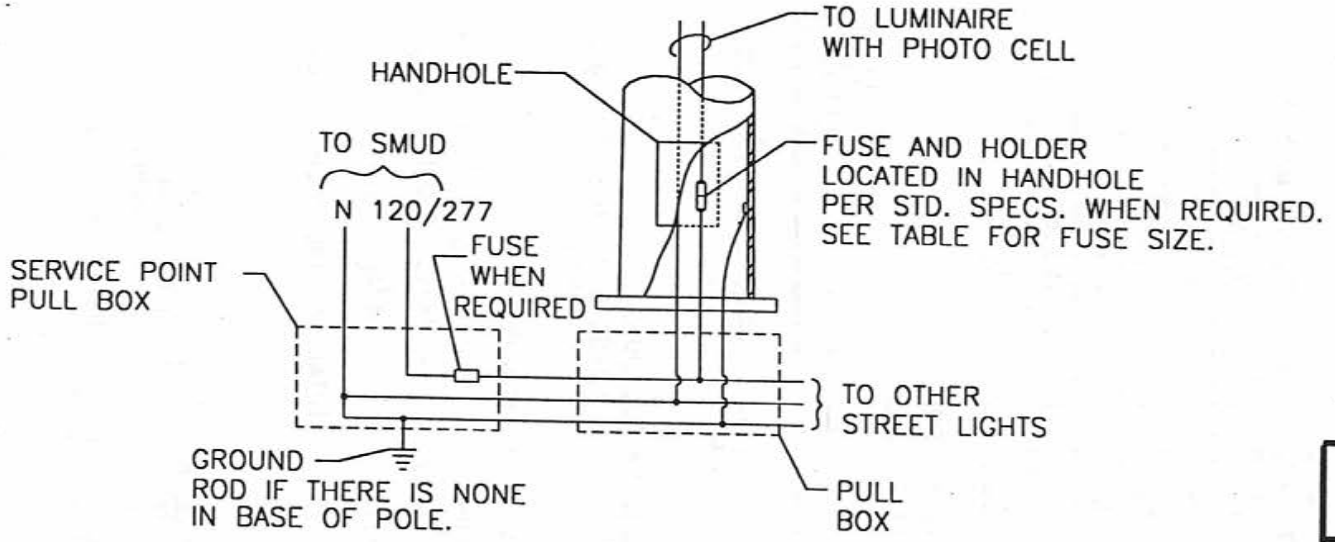

WIRING DIAGRAM

Cheryl Creson
DIRECTOR

COUNTY OF SACRAMENTO
PUBLIC WORKS AGENCY
TRANSPORTATION DIVISION

SIGNAL, LIGHTING AND ELECTRICAL SYSTEMS
IN-LINE FUSE FOR STREET LIGHTING POWER

SCALE: NONE
DATE: 12/98
DRAWN BY:

5-12

TYPICAL VOLTAGE DROP CALCULATION FOR 2–WIRE SYSTEM

$$\text{VOLTAGE DROP (COPPER CONDUCTOR)} = \frac{D \times A \times N \times 22}{\text{Circular Mils}}$$

D = Length of section, in feet.

A = Line operating amperes drawn by one light.

N = Number of lights in the circuit beyond the section.

SIZE WIRE	AREA (Circular Mils)
14	4,110
12	6,530
10	10,380
8	16,510
6	26,250
4	41,740

LINE OPERATING AMPERES FOR HIGH PRESSURE SODIUM LUMINAIRES
100 Watts ..... 1.10 Amps ENERGY EFFICIENT
100 Watts ..... 1.25 Amps
150 Watts ..... 1.80 Amps
200 Watts ..... 2.35 Amps
250 Watts ..... 2.90 Amps

TYPICAL MULTIPLE STREET LIGHTING SYSTEM

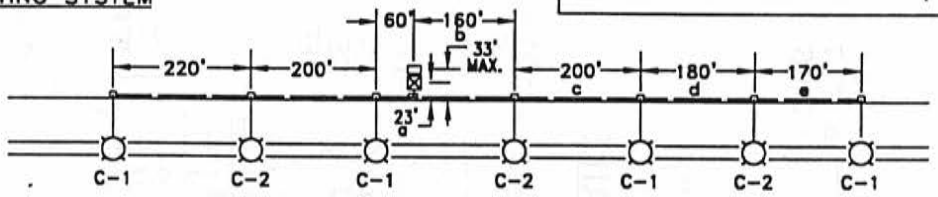

EXAMPLE CALCULATION:

FIND TOTAL VOLTAGE DROP IN CIRCUIT #1:
(120 volt system)

Voltage drop calculations

Section a $= \frac{20\ (2.9 \times 4)\ (22)}{10{,}380} = 0.49$

Section b + c $= \frac{360\ (2.9 \times 2)\ (22)}{10{,}380} = 4.43$

Section d + e $= \frac{350\ (2.9 \times 1)\ (22)}{10{,}380} = 2.15$

TOTAL VOLTAGE DROP = 7.07

LEGEND

- 250w. High Pressure Sodium Luminaire
- C-1 — Circuit #1
- ⊠ — Service Can
- – – – — Conduit w/ #10 A.W.G Conductors
- ▭ — Service Point Pullbox (Adjacent to Service Can)

NOTES:

1. Design must be based on a two (2) wire system, even though three (3) wires (w/ a single common wire) are actually used.
2. Maximum voltage drop allowed in 120 volt system = 8.05 volts.

Cheryl Creson
DIRECTOR

COUNTY OF SACRAMENTO
PUBLIC WORKS AGENCY
TRANSPORTATION DIVISION

2-WIRE STREET LIGHT WIRE SIZE AND VOLTAGE DROP CALCULATION

SCALE: NONE
DATE: 12/98
DRAWN BY:

5-13

TYPICAL VOLTAGE DROP CALCULATION FOR 3-WIRE SYSTEM

$$\text{VOLTAGE DROP (COPPER CONDUCTOR)} = \frac{D \times A \times N \times 11}{\text{Circular Mils}}$$

D = Length of section, in feet.

A = Line operating amperes drawn by one light.

N = Number of lights in the circuit beyond the section.

SIZE WIRE	AREA (Circular Mils)
14	4,110
12	6,530
10	10,380
8	16,510
6	26,250
4	41,740

LINE OPERATING AMPERES FOR HIGH PRESSURE SODIUM LUMINAIRES
100 Watts (ENERGY EFFICIENT) ..... 1.10 Amps
100 Watts ..... 1.25 Amps
150 Watts ..... 1.80 Amps
200 Watts ..... 2.35 Amps
250 Watts ..... 2.90 Amps

TYPICAL MULTIPLE STREET LIGHTING SYSTEM

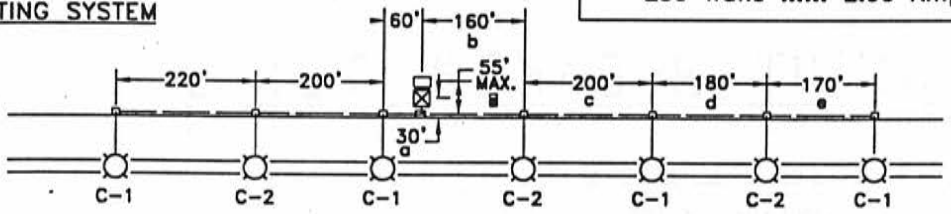

EXAMPLE CALCULATION:

FIND TOTAL VOLTAGE DROP IN CIRCUIT #1:
(120 volt system)

Voltage drop calculations

Section a $= \frac{20\ (2.9 \times 4)\ (11)}{6{,}530} = 0.39$

Section b + c $= \frac{360\ (2.9 \times 2)\ (11)}{6{,}530} = 3.52$

Section d + e $= \frac{350\ (2.9 \times 1)\ (11)}{6{,}530} = 1.71$

TOTAL VOLTAGE DROP = 5.62

LEGEND

- 250w. High Pressure Sodium Luminaire
- C-1 — Circuit #1
- ⊠ — Service Can
- – – – — Conduit w/ #12 A.W.G Conductors
- ▭ — Service Point Pullbox (Adjacent to Service Can)

NOTE:

1. Maximum voltage drop allowed in 120 volt system = 7.0 volts.

Cheryl Creson
DIRECTOR

COUNTY OF SACRAMENTO
PUBLIC WORKS AGENCY
TRANSPORTATION DIVISION

3-WIRE STREET LIGHT WIRE SIZE AND VOLTAGE DROP CALCULATION

SCALE: NONE
DATE: 12/98
DRAWN BY:

5-14

CONDUIT SIZING

CONDUIT SIZE	1"	1.5"	2"	2.5"	3"	3.5"
EQUIVALENT NUMBER OF #14 A.W.G. CONDUCRTORS*	8	19	31	44	69	91

1 – #12 Conductor = 1.2 – #14 Conductors
1 – #10 Conductor = 1.5 – #14 Conductors
1 – #8 Conductor = 2.3 – #14 Conductors
1 – #6 Conductor = 3 – #14 Conductors
1 – #4 Conductor = 4 – #14 Conductors
1 – #2 Conductor = 5.3 – #14 Conductors

CIRCUIT BREAKER SIZING

CONDUIT SIZE A.W.G.	MAXIMUM CIRCUIT BREAKER AMPERAGE
#2	100
#4	80
#6	50
#8	40
#10	30

NOTE:

1. The breaker size shall be 30 amp minimum or as determined by the load requirements.
2. Minimum new conduit size is 1–1/2".

Cheryl Creson
DIRECTOR

COUNTY OF SACRAMENTO
PUBLIC WORKS AGENCY
TRANSPORTATION DIVISION

STREET LIGHT CONDUIT AND BREAKER SIZING

SCALE: NONE
DATE: 12/98
DRAWN BY:

5-15

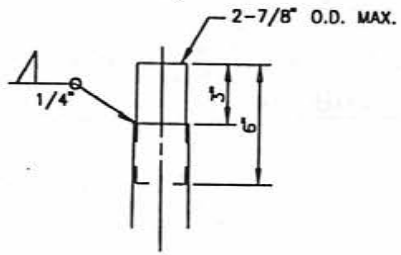

TENON DETAIL

NOTE:

1. STANDARD SHALL BE INSTALLED SO HANDHOLE FACES THE STREET.

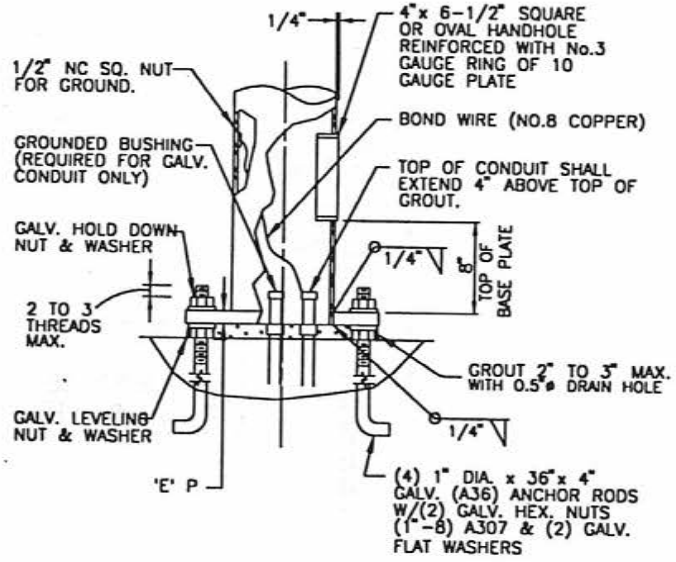

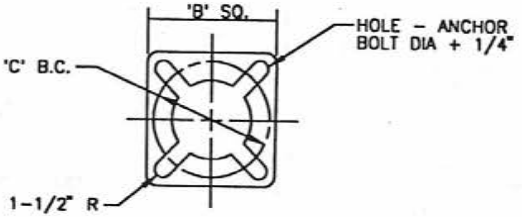

BASE DETAILS

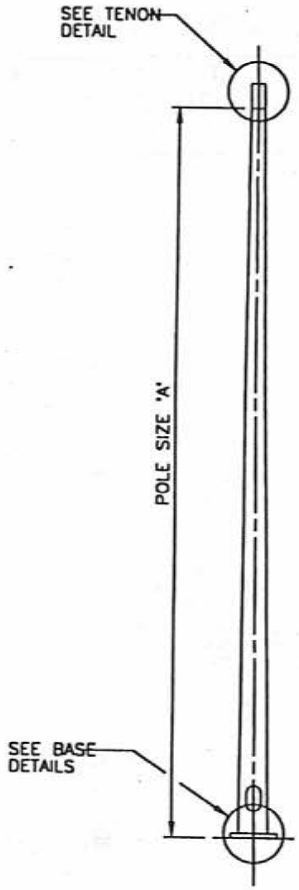

'B' SERIES

FOUNDATION DIMENSIONS		
	BASE DIMENSIONS	
	SQUARE	ROUND
'B' SERIES	2'x2'x4'	2'x4'

'B' SERIES								
POLE DATA					BASE PLATE DATA			GALVANIZED ANCHOR BOLTS
'A'	END OD	BASE OD MIN	BASE OD MAX	HOT DIPPED GALVAN.	'B'	'C'	'D'	
20'-0"	2-7/8"	5.61"	5.85"	10	10"	9-1/2"	1"	1"x36"x4"

Cheryl Creson
DIRECTOR

COUNTY OF SACRAMENTO
PUBLIC WORKS AGENCY
TRANSPORTATION DIVISION

SIGNAL, LIGHTING AND ELECTRICAL SYSTEMS TYPE 'B' STANDARD

SCALE: NONE
DATE: 12/98
DRAWN BY:

5-16

NOTES:

1) 'A' SERIES NUMBERING PROCEDURE

SHAFT LENGTH
A-286-8
SERIES
ID
(STANDARD UNLESS SPECIFIED)

1. STANDARD SHALL BE INSTALLED SO HANDHOLE FACES THE STREET.

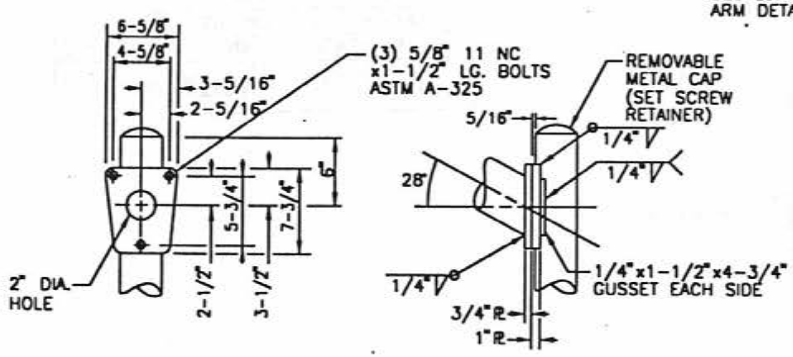

LUMINAIRE ARM DETAILS

LUMINAIRE ARM DATA					
ID	END OD	BASE OD	GA	'G'	'H'
6'-0"	2-3/8"	3-3/8"	10	1'-6"	7'-5"
8'-0"	2-3/8"	3-11/16"	10	2'-3"	7'-5"
10'-0"	2-3/8"	3-7/8"	10	2'-6"	13'-5"
12'-0"	2-3/8"	4-5/16"	10	3'-9"	13'-5"
15'-0"	2-3/8"	4-3/4"	10	4'-3"	13'-5"
18'-0"	2-3/8"	4-3/4"	10	5'-3"	13'-5"

FOUNDATION DIMENSIONS		
	BASE DIMENSIONS	
	SQUARE	ROUND
'A' SERIES	2'6" x 2'6" x 5'	30" x 5'

'A' SERIES									
IDENTIFICATION NUMBER 1	POLE DATA				BASE PLATE DATA				ANCHOR BOLTS
	'A'	END OD	BASE OD	GA	'B'	'C'	'D'	'E'	
A-250-ID	25'-0"	3-7/8"	7-5/16"	10	12"	11-1/1"	11"	1"	1"x36"x4"
A-266-ID	26'-6"	3-7/8"	7-1/2"	10	12"	11-1/1"	11"	1"	1"x36"x4"
* A-286-ID	28'-6"	3-7/8"	7-3/4"	10	12"	11-1/1"	11"	1"	1"x36"x4"
A-300-ID	30'-0"	3-7/8"	8"	10	12"	11-1/1"	11"	1"	1"x36"x4"

* STANDARD UNLESS OTHERWISE SPECIFIED.

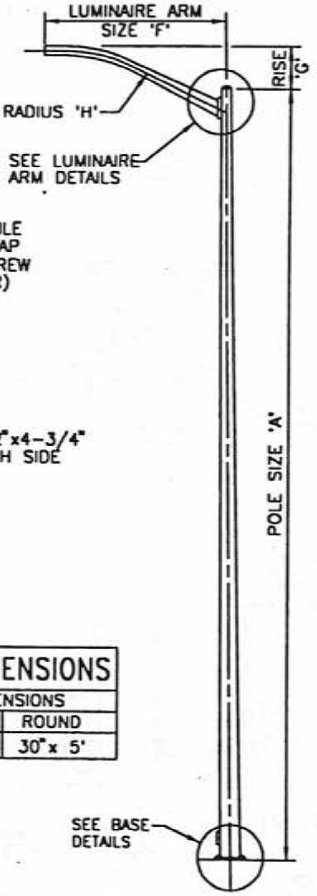

'A' SERIES

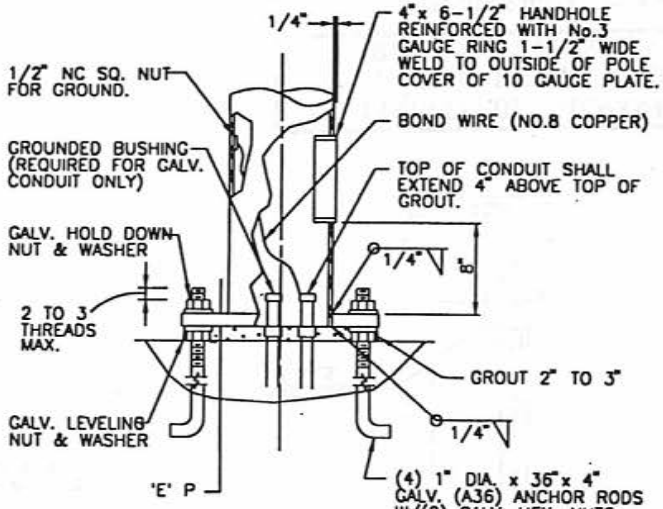

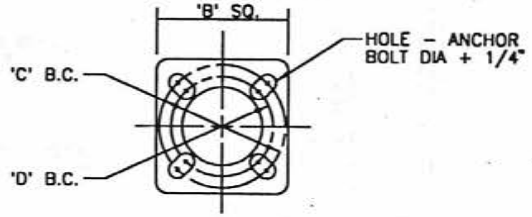

BASE DETAILS

Cheryl Creson
DIRECTOR

COUNTY OF SACRAMENTO
PUBLIC WORKS AGENCY
TRANSPORTATION DIVISION

SIGNAL, LIGHTING AND ELECTRICAL SYSTEMS
TYPE 'A' STANDARD

SCALE: NONE
DATE: 12/98
DRAWN BY:

5-17

FOR SIGNAL ARM DATA TABLE SEE STANDARD DRAWING 5-21

NOTES:

1. PIPE EXTENSION TO BE GALVANIZED.
2. LENGTHEN STRUCTURAL TUBING AS REQUIRED ON 33'-35', 41'-45' ARMS UP TO 60' MAX. SIGHT HOLE TO REMAIN AT 10' FROM END OF TUBING.
3. SLIP JOINT ARM CONNECTION REQUIRES (2) 3/4" DIA. HOLES AT 45 DEGREES FROM TOP TO ACCEPT (1) 5/8"-11NC x 1 1/2" LONG STAINLESS STEEL HEX. SOCKET SET SCREW, (1) STAINLESS STEEL LOCK NUT AND (1) HEAVY HEX. NUT. (TYPICAL-2 LOCATIONS).
4. REFER TO CALTRANS STANDARD PLAN SHEETS ES-6J THROUGH ES-6R FOR DESCRIPTION OF COLUMN HEADINGS IN DATA TABLE.
5. ALTERNATIVE DETAILS APPROVED BY THE ENGINEER MAY BE SUBSTITUTED FOR THE ARM CONNECTIONS AND CONFIGURATIONS SHOWN.
6. LUMINAIRE ARM LENGTH SHALL BE 15' UNLESS OTHERWISE NOTED.
7. MATERIAL
   ARM STEEL OF 48,000psi MINIMUM YIELD AFTER FABRICATION.

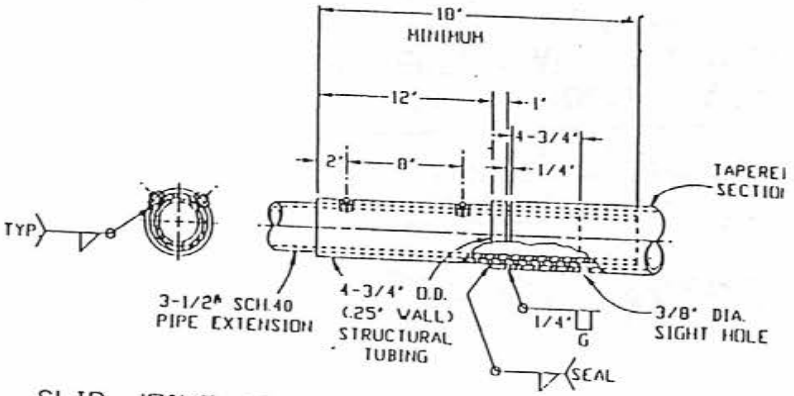

SLIP JOINT ARM CONNECTION DETAIL

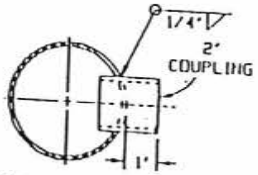

COUPLING DETAIL

TYPE 'J' MAST ARM EXTENSION DETAIL

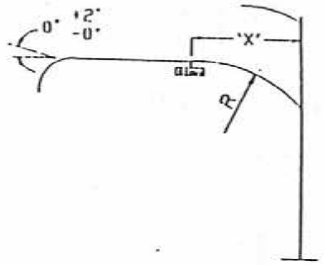

ARM RISE TOLERANCE

Cheryl Creason
DIRECTOR

COUNTY OF SACRAMENTO
PUBLIC WORKS AGENCY
TRANSPORTATION DIVISION

'J' SIGNAL ARM

SCALE: NONE
DATE: 12/98
DRAWN BY:

5-18

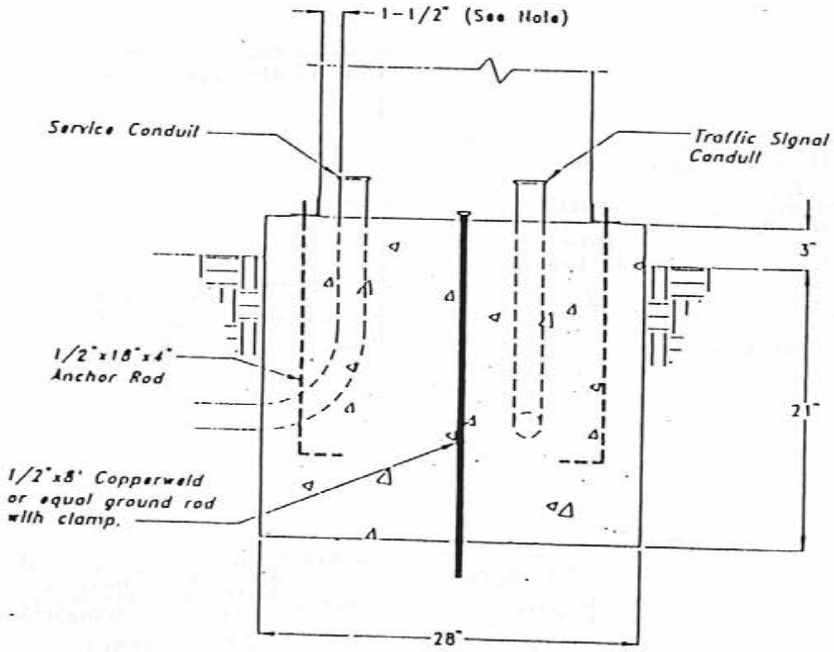

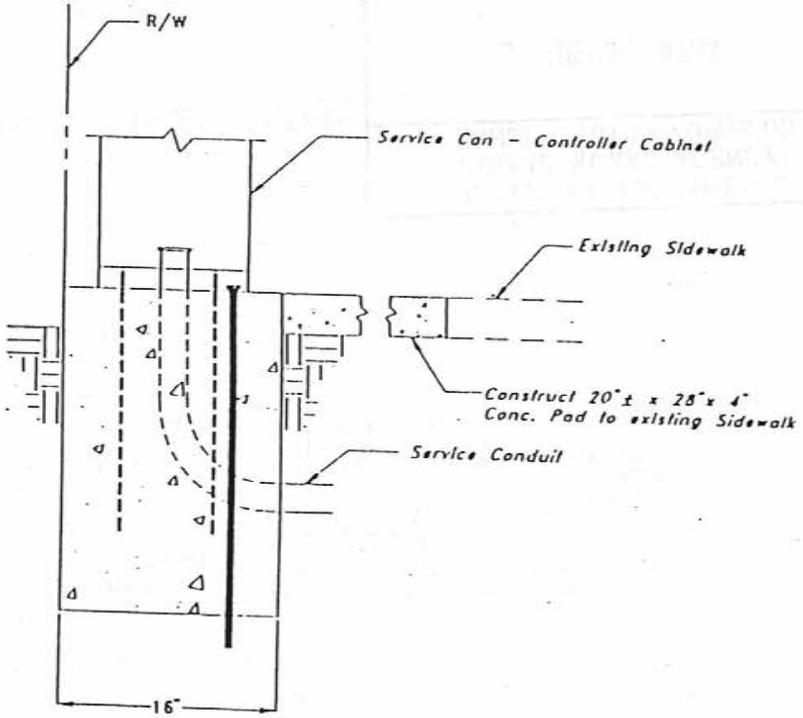

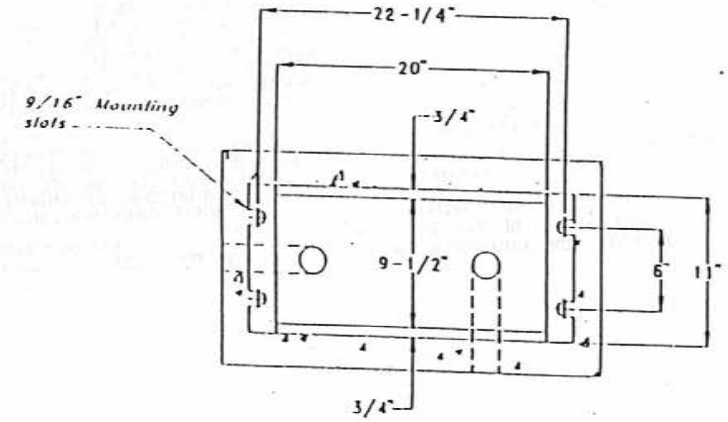

Note: Conduit location is critical to proper cabinet installation.

Cheryl Creson
DIRECTOR

COUNTY OF SACRAMENTO
PUBLIC WORKS AGENCY
TRANSPORTATION DIVISION

LOCAL SOLID STATE PEDESTRIAN CONTROLLER BASE DETAIL

SCALE: NONE
DATE: 9/91
DRAWN BY: JFT

5-19

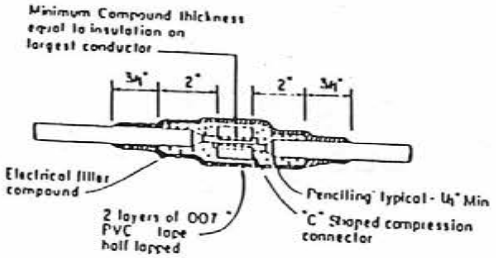

TYPE "S" SPLICE
(Between 2 Free-Ends)

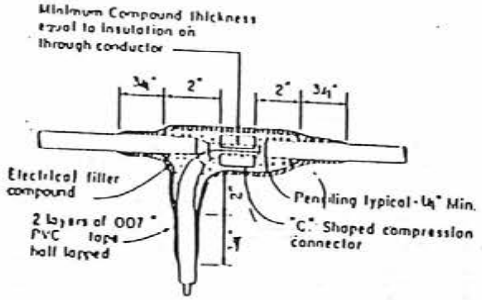

TYPE "C" SPLICE
(Between 1 Free-End and 1 Through Conductor)

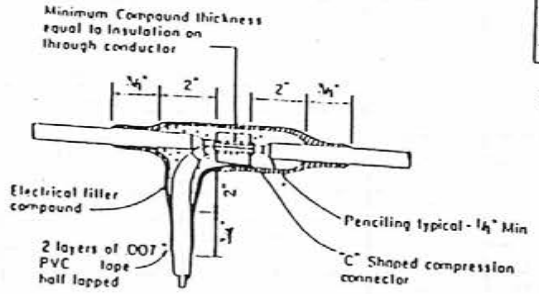

TYPE "T" SPLICE
(For 3 Free-Ends)

NOTE:
Pressure sleeve type connectors may be used for type "S" and "T" splices

INSULATING METHOD
Low Voltage Circuits (0-600 Volts)

METHOD "A"

Apply electrical filler compound and low voltage tape as shown.

OR

METHOD "B"

1. Use 2 layers of electrical insulating pad of minimum thickness of ⅛" each or 2 layers, half lapped, synthetic, oil resistant, self fusing rubber tape.
2. Apply .007" thick PVC tape to a thickness equal to original insulation.

High Voltage Circuits (0-600 Volts)

1. Apply one coat of rubber cement and allow to dry
2. Apply high voltage tape in place of filler compound, to a thickness equal to original insulation.
3. Apply 2 layers of PVC tape, half lapped.

GENERAL NOTES

1. All dimensions are nominal and minimal.
2. Rubber tapes shall be rolled after application
3. When PVC tape is used as final layer, paint finished splice with electrical insulating coating

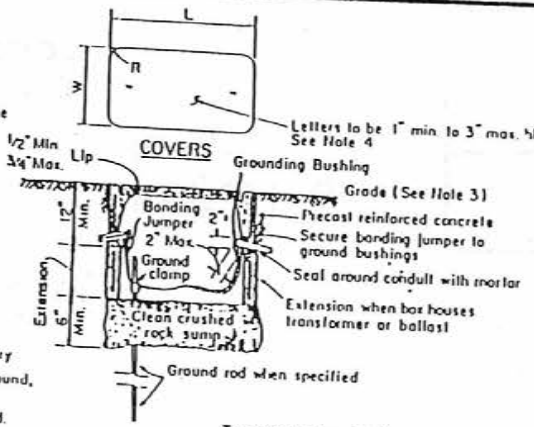

NO. 3½
NO. 5 & NO. 6
(Not to Scale)

Top outside edges of all concrete covers and pull boxes shall have a ¼" min. radius.

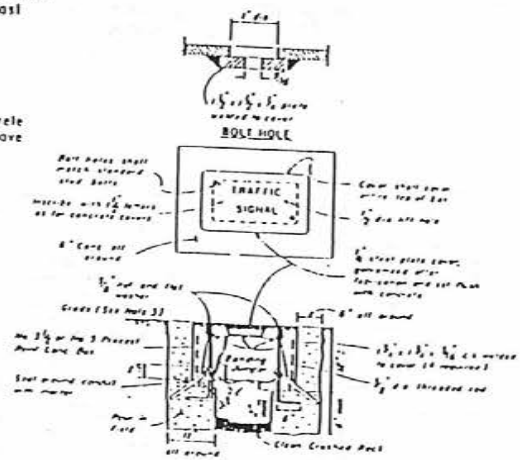

PULLBOX WITH STEEL TRAFFIC COVER

DIMENSION TABLE

Pull Box	CONCRETE BOX		CONCRETE COVER				PLASTIC BOX		PLASTIC COVER			
	Min.* Thickness	Min. Depth Box and Extension	L**	W**	R	Min. Thickness	Min.* Thickness	Min. Depth Box and Extension	L**	W**	R	Edge Thickness
No 3½	1"	No Extension	15 5/16"	9 15/16"	13 3/32"	1 3/8"	5/16"	No Extension	15 3/8"	10"	13 3/32"	1 3/4"
No. 5	1"	22"	20 5/8"	10 1/2"	13 3/32"	1 7/8"	5/16"	20"	23"	13 11/16"	1 1/4"	2"
No 6	1½"	24"	30 5/8"	17 3/8"	1 1/2"	1 7/8"	3/8"	20"	30 1/2"	17 3/8"	1 3/8"	2"

*Excluding conduit web. ** Top dimension

Cover of dimensions shown shall fit flush with top of box with a ⅛" maximum clearance all around, except that corners may be ½" maximum clearance.

NOTES ON PULL BOXES

1. Use steel cover and special concrete bolting, as shown, when box is to be installed where subject to traffic loads. Steel cover shall have embossed non-skid pattern when box is placed in paved or sidewalk areas
2. Steel reinforcing shall be as regularly used in the standard products of the respective manufacturer
3. Top of pull boxes shall be flush with surrounding grade or top of adjacent curb, except that in unpaved areas where pull box is not immediately adjacent to and protected by a concrete foundation, pole or other protective construction, the box shall be placed with its top 0.10 foot above surrounding grade. Where practicable, pull boxes shown in the vicinity of curbs shall be placed adjacent to the back of curb, and pull boxes shown adjacent to standards shall be placed on side of foundation facing traffic, unless otherwise noted.
4. Pull box covers shall be marked as follows:
   (a) "TRAFFIC SIGNAL" Where pull box contains traffic signal conductors with or without street lighting conductors
   (b) "STREET LIGHTING" Where pull box contains street lighting conductors only "HIGH VOLTAGE" shall be added, where street lighting voltage is above 600 volts.
   (c) "SERVICE" For pull box where riser conduits from utility pole terminate.
5. Bonding jumpers for metal covers shall be a minimum of 36" long. Metal covers shall be electrically bonded to the conduit ground.

Cheryl Crean
DIRECTOR

COUNTY OF SACRAMENTO
PUBLIC WORKS AGENCY
TRANSPORTATION DIVISION

STANDARD DETAILS NO. 4
PULLBOXES AND SPLICING

SCALE: NONE
DATE: 3/89
DRAWN BY:

5-20

SIGNAL ARM DATA TABLE

CALTRANS POLE DESIGNATION W/ LUMINAIRE	CALTRANS POLE DESIGNATION W/O LUMINAIRE	E PROJECT ARM LEN.	F MIN. SPACING	ARM DIAMETER END	ARM DIAMETER BASE	ARM THICKNESS	I BOLT CIRCLE	H5 CAP SCREWS	J PLATE SIZE	K ARM PLATE THICKNESS	L POLE PLATE THICKNESS	Ø (DEGREES)	X MAX.	R ARM RADIUS
24-4-70	23-4-70	33'-0"	14'-0"	5 1/4"	9"	.2391"	12"	1 1/4"-7NCx3"	12"	1 1/4"	1 1/2"	23	10'-6"	21'-0"
24-4-70	23-4-70	34'-0"	14'-0"	5 1/4"	9"	.2391"	12"	1 1/4"-7NCx3"	12"	1 1/4"	1 1/2"	23	10'-6"	21'-0"
24-4-70	23-4-70	35'-0"	14'-0"	5 1/4"	9"	.2391"	12"	1 1/4"-7NCx3"	12"	1 1/4"	1 1/2"	23	10'-6"	21'-0"
26-4-70	27-4-70	36'-0"	14'-0"	5 1/4"	9 3/8"	.2391"	13"	1 1/4"-7NCx3"	13"	1 1/2"	1 1/2"	21	10'-6"	37'-0"
26-4-70	27-4-70	37'-0"	14'-0"	5 1/4"	9 3/16"	.2391"	13"	1 1/4"-7NCx3"	13"	1 1/2"	1 1/2"	21	10'-6"	37'-0"
26-4-70	27-4-70	38'-0"	14'-0"	5 1/4"	9 3/4"	.2391"	13"	1 1/4"-7NCx3"	13"	1 1/2"	1 1/2"	21	10'-6"	37'-0"
26-4-70	27-4-70	39'-0"	14'-0"	5 1/4"	9 7/8"	.2391"	13"	1 1/4"-7NCx3"	13"	1 1/2"	1 1/2"	21	10'-6"	37'-0"
26-4-70	27-4-70	40'-0"	15'-0"	5 1/4"	10"	.2391"	13"	1 1/4"-7NCx3"	13"	1 1/2"	1 1/2"	21	10'-6"	37'-0"
26-4-70	27-4-70	41'-0"	15'-0"	5 1/4"	10 1/16"	.2391"	13"	1 1/4"-7NCx3"	13"	1 1/2"	1 3/4"	15	13'-0"	37'-0"
26-4-70	27-4-70	42'-0"	15'-0"	5 1/4"	10 1/16"	.2391"	13"	1 1/4"-7NCx3"	13"	1 1/2"	1 3/4"	15	13'-0"	37'-0"
26-4-70	27-4-70	43'-0"	15'-0"	5 1/4"	10 1/16"	.2391"	13"	1 1/4"-7NCx3"	13"	1 1/2"	1 3/4"	15	13'-0"	37'-0"
26-4-70	27-4-70	44'-0"	15'-0"	5 1/4"	10 1/16"	.2391"	13"	1 1/4"-7NCx3"	13"	1 1/2"	1 3/4"	15	14'-0"	37'-0"
26-4-70	27-4-70	45'-0"	15'-0"	5 1/4"	10 1/16"	.2391"	13"	1 1/4"-7NCx3"	13"	1 1/2"	1 3/4"	15	14'-0"	37'-0"
29-5-70	28-5-70	46'-0"	15'-0"	5 1/4"	10 3/4"	.2391"	15 3/4"	1 1/2"-6NCx3 1/2"	15"	1 3/4"	1 3/4"	15	14'-0"	37'-0"
29-5-70	28-5-70	47'-0"	15'-0"	5 1/4"	10 15/16"	.2391"	15 3/4"	1 1/2"-6NCx3 1/2"	15"	1 3/4"	1 3/4"	15	14'-0"	37'-0"
29-5-70	28-5-70	48'-0"	15'-0"	5 1/4"	11 1/16"	.2391"	15 3/4"	1 1/2"-6NCx3 1/2"	15"	1 3/4"	1 3/4"	15	14'-0"	37'-0"
29-5-70	28-5-70	49'-0"	15'-0"	5 1/4"	11 3/16"	.2391"	15 3/4"	1 1/2"-6NCx3 1/2"	15"	1 3/4"	1 3/4"	15	14'-0"	37'-0"
29-5-70	28-5-70	50'-0"	15'-0"	5 1/4"	11 5/16"	.2391"	15 3/4"	1 1/2"-6NCx3 1/2"	15"	1 3/4"	1 3/4"	15	14'-0"	37'-0"
29-5-70	28-5-70	51'-0"	15'-0"	5 1/4"	11 1/2"	.2391"	15 3/4"	1 1/2"-6NCx3 1/2"	15"	1 3/4"	1 3/4"	15	14'-0"	37'-0"
29-5-70	28-5-70	52'-0"	15'-0"	5 1/4"	11 5/8"	.2391"	15 3/4"	1 1/2"-6NCx3 1/2"	15"	1 3/4"	1 3/4"	15	14'-0"	37'-0"
29-5-70	28-5-70	53'-0"	15'-0"	5 1/4"	11 3/4"	.2391"	15 3/4"	1 1/2"-6NCx3 1/2"	15"	1 3/4"	1 3/4"	15	14'-0"	37'-0"
29-5-70	28-5-70	54'-0"	15'-0"	5 1/4"	11 7/8"	.2391"	15 3/4"	1 1/2"-6NCx3 1/2"	15"	1 3/4"	1 3/4"	15	14'-0"	37'-0"
29-5-70	28-5-70	55'-0"	15'-0"	5 1/4"	12"	.2391"	15 3/4"	1 1/2"-6NCx3 1/2"	15"	1 3/4"	1 3/4"	15	14'-0"	37'-0"

Sample Plan Nomenclature: J 26-4-70 (43)

Indicates "J" Signal Arm (See 5-6)

State Standard Plans pole designation

Project arm length

Cheryl Creson
DIRECTOR

COUNTY OF SACRAMENTO
PUBLIC WORKS AGENCY
TRANSPORTATION DIVISION

'J' SIGNAL ARM DATA TABLE

SCALE: NONE
DATE: 2/99
DRAWN BY: ERD

5-21

SECTION 6
SOUND BARRIER DESIGN

TABLE OF CONTENTS

Sound Barrier Design **Page**

6-1 LOCATION REQUIREMENTS 6-1
6-2 DESIGN 6-1
6-3 PLAN REQUIREMENTS 6-1

SECTION 6

SOUND BARRIER DESIGN

6-1 LOCATION REQUIREMENTS – Sound barriers may be required along the rear and side property lines of residential developments adjacent to freeways, major highways and other ground level noise elements in order to achieve the noise objectives of the Sacramento County Noise Element Noise Ordinance, or as required by the project conditions of approval.

6-2 DESIGN – The sound barrier shall be designed to obtain a 60 LDN at the affected property line or as required by the Director. There are existing soundwall systems that have been certified by the County. Information on the systems is available through the Director.

The Director may approve new sound barriers upon request. The request shall include plan details and calculations prepared and signed by an appropriate Consulting Engineer.

Sound barriers shall be designed for a minimum longevity of 30 years.

Sound barriers normally will not be allowed within public rights of way when installed as a condition of the development or as an option of the builder. The Director may allow certain sound barriers to be within the public rights of way with an encroachment permit. Normally, if 2 feet or less of public street right of way is available, no permit will be granted.

Sound barriers constructed along freeways, or at the back of sidewalk along the outside of curved major streets, shall incorporate a barrier-type design element to minimize the potential for vehicles penetrating the wall. Other locations that represent a higher potential for run-off-road accidents shall be required to incorporate a Caltrans Type 50 (or equivalent) barrier-type design element.

Open cells in hollow-type sound barriers shall be grouted on post-tensioned wall systems as required by the Director.

6-3 PLAN REQUIREMENTS – All construction details for sound barriers, including the locations and limits, shall be shown on the site improvement plans.

TABLE OF CONTENTS

7-1 DESIGN CRITERIA 7-1

7-2 AVERAGE FLOW DETERMINATION 7-1

A. Development Classification 7-1

7-3 DESIGN FLOW CRITERIA 7-3

7-4 PIPE CAPACITY, SLOPE, VELOCITY, SIZE, DEPTH AND MATERIAL 7-3

A. Size 7-3

B. Slope and Velocity 7-4

C. Capacity 7-4

D. Depth 7-4

E. Material 7-4

7-5 GROUNDWATER REQUIREMENTS 7-5

A. Geotechnical Reports 7-5

7-6 SEWER LOCATIONS AND ALIGNMENT REQUIREMENTS 7-5

A. General 7-5

B. Location in New Subdivision 7-5

C. Location in Existing Streets 7-6

D. Easements 7-6

E. Water Well Clearance 7-6

F. Alignment 7-6

7-7 TRENCH LOADING CONDITIONS AND PIPE DESIGN 7-6

A. Rigid Conduit Loading 7-7

B. Flexible Conduit Loading 7-7

C. Safety Factor 7-7

D. Allowable Deflection 7-7

E. Bedding and Initial Backfill 7-7

F. Special Pipe Strength Requirements 7-8

G. Design Guide 7-8

7-8 MANHOLE CRITERIA 7-8

A. General 7-8
B. Spacing 7-8
C. Elevation Criteria 7-9
D. Construction Requirement 7-9
E. Connections to the Interceptor System 7-9
F. Vacuum Testing 7-9
7-9 DROP CONNECTION CRITERIA 7-9
7-10 FLUSHING BRANCH CRITERIA 7-10
7-11 SERVICE SEWER DESIGN 7-10
A. General 7-10
B. Sizing 7-10
C. Construction by County Forces 7-10
D. Connection Limitations 7-11
E. Material 7-11
F. Location 7-11
G. Depth 7-11
H. Special Requirements in Developed Areas 7-12
7-12 CREEK CROSSING DESIGN 7-12
A. General 7-12
B. Design 7-12
C. Construction and Material 7-12
7-13 BORING AND JACKING REQUIREMENTS 7-13
7-14 PUMP STATION AND FORCE MAIN REQUIREMENTS 7-13
7-15 SEWER IMPROVEMENT PLAN REQUIREMENTS 7-14
A. General Requirements 7-14
B. Layout Sheet 7-14
C. Plan and Profile Sheets 7-14
D. Detail Drawings 7-16
E. Connection to Existing Facilities 7-16

7-16 DESIGN OF ON-SITE SEWER SYSTEMS FOR PRIVATE MULTIPLE OWNERSHIP RESIDENTIAL FACILITIES 7-17

A. Planned Unit Developments and Townhouses 7-17

B. Condominiums or Cooperative Developments 7-18

7-17 MULTI-STRUCTURAL COMMERCIAL AND INDUSTRIAL DEVELOPMENTS 7-18

7-18 SUB-AREA SEWER SERVICE PLAN (SASSP) 7-18

A. General Requirements 7-18

B. Study Map 7-19

C. Report Preparation 7-19

SECTION 7
SANITARY SEWER DESIGN

7-1 DESIGN CRITERIA: Design to these minimum criteria without consideration to the actual project conditions does not guarantee plan approval. These Improvement Standards are minimum design criteria. The Actual design parameters must be established by the designer based on site-specific conditions. Improvement Standards shall only apply to collector sewer facilities (less than 1 mgd Peak Wet Weather Flow) to be maintained by County Sanitation District 1 (CSD-1) or, with those exceptions noted, to that within private multiple ownership residential or multi-structural commercial and industrial developments. A basic design criterion is that each property owner is responsible for the installation of a collector sewer across his/her property and/or frontage for an upstream service area. Lacking such construction participation, the in-lieu fee provisions of the appropriate sanitation or sewer maintenance district shall apply unless otherwise approved by the Director. All connections shall comply with the most recent Sewer Use Ordinance, CSD-1 Connection Fee Ordinance, and the Sacramento Regional Sanitation District (SRCSD) Connection Fee Ordinance.

7-2 AVERAGE FLOW DETERMINATION: Flow determination shall be based upon the most recent zoning. The minimum population density used shall be equivalent to that of single family zoning. The area shall be examined for trends toward population concentration greater than present zoning allows and/or more than six lots per acre and, if found, an estimate should be made of the probable extent of such concentration. This estimate shall be used as the basis for determining flow.

A. Development Classification -

1. Equivalent Single Family Dwelling Units (ESD) - Flow shall be based on 310 gallons per residential unit (lot) per day (1 ESD), and a minimum of six lots per acre at developed density. However, if the number of lots per acre is known, and is greater than six, the actual number shall be used.

2. Single Family Planned Unit Developments - Flow per unit shall be 232 gallons per residential unit/day (0.75 ESD) and the actual number of units per acre shall be considered. However, in the absence of known data, the density shall be assumed to be 12 units per acre. If characteristics of the individual dwelling units are similar in characteristics to single family detached units (area, number of rooms), the Director may assign the same design flow values as shown for single family detached residential units.

3. Multiple Residential - The value assigned to each unit shall be 232 gallons per day (0.75 ESD) unless the individual dwelling units are similar in characteristics to single family detached residential units. In the latter case, the Director may assign flow quantities of 310 gallons per day (1 ESD) per dwelling unit. Mobile home flow shall be 232 gallons per day per unit (0.75 ESD).

4. Schools - The larger flow, as determined from one of the two following methods shall be used:

   a. The entire school area shall be assumed to contribute an average flow equivalent to that of an equal area of single family, detached residential units: i.e.; 1,860 gallons per day (6 ESDs) per acre.

   b. Average daily flow per school shall be based on the type of school as follows, with the indicated capita limits including ultimate student population plus administration, teaching and operating personnel.

Type of School	Avg. Daily Flow	Capita Limit
Elementary (K-S, K-8 or K-8)	0.025 MG	1,000
Upper Elementary (6-8, 7-8 or 7-9)	0.060 MG	1,500
High School (9-12 or 10-12)	0.080 MG	2,000

   For enrollments and personnel in excess of that indicated, there shall be added 25 gallons per day per additional capita in elementary schools and 40 gallons per day per additional capita in upper elementary and high schools.

5. Industrial and Commercial - Every attempt shall be made to base design flows on specific quantities for the type of development expected. In the absence of specific knowledge of the type of development expected, a minimum, flow value of 1,860 gallons per day (6 ESDs) per net acre shall be used for design purposes unless some other value is deemed appropriate based upon surrounding development.

   Special consideration by the Water Quality Division shall be given to any facilities with a magnitude or type of discharge that could be detrimental to the public system. In accordance with the SRCSD Connection Fee Ordinance, in cases where a user expects to contribute a peak hourly flow rate that exceeds the average hourly flow rate on the average day of the maximum month by a factor greater than 4.2; the District Engineer may require the user to construct, at his own cost, peak flow attenuation facilities which will reduce the peak hourly flow rate to not more than

4.2 times the average flow rate during said average day of the maximum month. Siting constraints as set forth in that Ordinance shall also be taken into consideration. The requirements of the Sewer Use Ordinance of the Sanitation District shall also apply.

7-3 DESIGN FLOW CRITERIA: The following criteria will be used for calculating the design flows unless more current design criteria is available through Master Plan updates:

Category	Conditions				Modifiers
Development Density	Low Density Residential	Medium Density Residential	Commercial/ Industrial	Transit Oriented Develop-ment	Minimum plan density shall be RD-6
Flow Generation (310 gpd/ESD)	6 ESDs per acre	15 ESDs per acre	6 ESDs per acre	11 ESDs per acre	Rainfall Dependent I/I: Existing Areas - 1,400 gpd/acre *New Areas - 1,000 gpd/acre Groundwater Infiltration: All Areas – 200 gpd/acre
Peaking Factor	$PF = 3.5 - 1.8Q_a^{0.05}$ (Q_a = ADWF, mgd)				Minimum shall be 1.2
Velocity Criteria	Minimum 2 fps at Peak Dry Weather Flow				
Hydraulic Grade Line	Maximum HGL at crown of pipe at Peak Wet Weather Flow				
Friction Factor	n = 0.013				
Minimum Depth	5' at periphery of service area				8" sewer from periphery to collection point

The minimum peaking factor for service areas consisting primarily of commercially and/or industrially zoned lands shall be 2.4.

* New areas are considered to be those constructed within the last 15 years.

7-4 PIPE CAPACITY, SLOPE, VELOCITY, SIZE, DEPTH AND MATERIAL: Design criteria for the pipe is as follows:

A. Size - The minimum size collector sewer shall be eight inches in diameter unless otherwise approved by the Director.

B. **Slope and Velocity** - Manning's formula shall be used to determine the relation of slope, design flow, velocity, diameter, and "n" value. The "n" value shall be 0.013 for all pipe materials.

1. When the minimum velocity of 2 feet per second can not be achieved the minimum slope shown below shall be used. The following is a table of slopes and design flow capacities for various pipe diameters. Pipe slopes that are less than those listed in this table shall not be used without the approval of the Director. The slopes indicated are based on a velocity of two feet per second with the pipe flowing full.

Diameter	Minimum Slope	Design Capacity	ESD's Served
Inches	Fixed Alignment	MGD	Max units
8 "	0.0035	0.38	300
10 "	0.0025	0.58	500
12 "	0.0020	0.85	800
15 "	0.0015	1.60	2100

2. The maximum depth of flow at design conditions in any collector (12-inch diameter
or less) shall be 0.7 of the pipe diameter. Lines larger than 12-inches in diameter may be designed to flow full unless direct service sewer connections are planned; in which case the 0.7 diameter maximum depth shall govern.

C. **Capacity** - Pipe capacity, in all cases, shall be adequate to carry the design flow from the entire tributary area, even though said area is not within the project boundaries.

D. **Depth** - In the design of a system, one of the controlling conditions shall be that the collector system is to be at sufficient depth to provide a minimum slope for the service sewer of 1/4 inch per foot, at the same time maintaining a minimum cover of 12 inches at any buildable location within the properties to be served, and a minimum of four feet of cover at the right of way line, except that the depth shall be increased to five feet when a water main is installed at the back of the sidewalk.

E. **Material** - Pipe material shall be as approved by the Director, and shall conform to the requirements of the Sacramento County Standard Construction Specifications. Pipe materials, which will normally be considered, are as follows:

1. Vitrified Clay, Bell and Spigot Pipe conforming to the provisions the Sacramento County Standard Construction Specifications.

2. Ductile Iron Pipe conforming to the provisions the Sacramento County Standard Construction Specifications for pipelines 10 inches in diameter and less.
3. Reinforced Concrete Pipe conforming to the provisions of the Sacramento County Standard Construction Specifications.

The following pipe materials will be considered on a case by case basis, subject to the provisions stated:

4. Polyvinyl Chloride (PVC) C900 DR 14 conforming to ASTM D1784 or Polyvinyl Chloride Pipe (PVC) SDR 26 conforming to ASTM 3034 and 679. Requests for approval shall include either soil testing information or a letter from a Soils Engineer stating that the native soils on the project site within the area of the pipe zone will have a minimum soils reaction modulus (E') of 150 psi. Pipe deflection calculations shall be submitted. Only pipe that meets or exceeds CSD-1 Pipe deflection criteria will be allowed. This type pipe, when allowed, will be permitted in residential subdivisions only.

7-5 GROUNDWATER REQUIREMENTS: [Subject to future revision] Sewer improvements in high groundwater areas shall be subject to the requirements of this section.

A. Geotechnical Reports - A Geotechnical Report shall be required for all plans installing public sewer facilities or private sewer systems constructed under section 7-15 of these standards.

7-6 SEWER LOCATIONS AND ALIGNMENT REQUIREMENTS: Location and alignment criteria are as follows:

A. General - All sanitary sewers shall be placed within rights of way dedicated for public streets unless the use of easements is specifically approved by the Director. In some streets, dual collectors may be required.

There shall be a minimum horizontal clearance of ten feet between parallel water and sanitary sewer lines and the water main shall be higher than the sewer. On crossings, the water line shall be at least 12 inches above the sewer line. If a sanitary sewer force main must cross a water main, the requirements of Section 8-13B.4 shall apply.

B. **Location in New Subdivision** - In new subdivisions, sewers shall be located six feet south or east of street centerlines within minor and primary streets. If a street loops 180 degrees or more it is not necessary for the collector sewer to cross to the other side of the street to meet this requirement.

C. **Location in Existing Streets** - When sanitary sewers are to be installed in an existing street, factors such as curbs, gutters, sidewalks, traffic conditions, traffic lane conditions, pavement conditions, future street improvements' plans, and existing utilities shall all be considered. The approval of the Transportation Division, the Water Resources Division, and CSD-1 shall be obtained in every instance.

D. **Easements** - Permanent easements shall be a minimum of 15 feet wide for sewers up to 18 inches in diameter and beginning at 20 feet wide for larger diameter sewers. A trench wall slope of 1.5:1 shall be the basis on which the easement width is determined. The slope may be adjusted as required by existing soil conditions.

Temporary working easements of adequate dimensions shall be provided to allow the construction within the permanent easement to be completed in a safe and reasonable manner. Easements shall be granted to CSD-1 or to SRCSD.

E. **Water Well Clearance** - No sanitary sewer interceptor, trunk line, collector, or service shall be placed nearer than 100 feet to any water well, public or private, unless the well has been abandoned in full accord with the Environmental Health Division of the County Environmental Management Department's standards, or the location otherwise approved, in writing, by the appropriate health agencies. If a clearance of less than 100 feet is approved, all pipe within that distance from the well shall be of material approved by the Director. In no case shall a clearance of less than 50 feet be allowed.

F. **Alignment** - Alignment of all sewer pipe and structures shall be designed to provide a minimum one foot clearance from all other utilities and/or improvements, unless otherwise approved by the director.

1. Horizontal alignment shall be parallel to the street centerline wherever possible. Minimum radius for sanitary sewers 8 inches through 12 inches in diameter shall be 194 feet. A larger radius shall be used wherever practicable or where necessary to avoid joint deflection in excess of 75% of the pipe manufacturers' recommended maximum. Only factory joints will be allowed.

2. Vertical alignment shall provide a constant slope between manholes. If a change in grade is necessary, construction of a manhole shall be required unless the Director approves the use of a vertical curve. In such case, elevations shall be shown at ten-foot intervals throughout the length of the vertical curve. Joint deflections in excess of 75% of the pipe manufacturers' recommended maximum will not be allowed. Only factory joints will be allowed.

7-7 TRENCH LOADING CONDITIONS AND PIPE DESIGN: The loading condition and pipe design criteria for conduits are as follows:

A. **Rigid Conduit Loading** - On rigid conduits, Marston's formula shall be used to determine the load placed on the pipe by backfill. The procedure for rigid pipe is described in the ASCE Manual and Report of Engineering Practice 60, the Clay Pipe Engineering Manual, and in similar handbooks. In the absence of specific soils data, as determined by a Soils Engineer, a soil weight of 120 p.c.f. and a $k\mu$ factor of 0.110 shall be used.

B. **Safety Factor** - On rigid conduits, a safety factor of 1.25 shall be used for reinforced concrete pipe, and 1.5 for all other rigid pipe. Only the three edge bearing strength of the pipe shall be used in the computations for rigid pipe.

C. **Flexible Conduit Loading** - On flexible conduits, Marston's formula for flexible conduits as shown in the ASCE Manual and Report of Engineering Practice No. 60 and in other similar handbooks shall be used to determine the load placed on the pipe by the backfill. The maximum load allowable shall be determined by pipe deflections computed by the Iowa Deflection Formula (or Spangler's Formula). The soils reaction modulus (E′) shall be estimated using a method acceptable to the Director, and shall consider the modulus values of both the native and the bedding materials (ATV method). The bedding soils reaction modulus (E′) used in the deflection calculation shall 1,000 psi for Type II and Type IIA bedding, utilizing imported material to twelve inches above the top of the pipe. Deflection lag factor shall be 1.5. In the absence of specific soil data, as determined by a Soils Engineer, a soil weight of 120 p.c.f., a $k\mu$ factor of 0.110, and a bedding constant of 0.110 shall be used. Placement of flexible conduit within soils equivalent to Class V and types MH and CH of Class IV ASTM D2321 material will not be permitted unless approved by the Director.

D. **Allowable Deflection** - On flexible conduits, the maximum allowable deflection shall be 3 %. Deflection shall be measured as described in the Sacramento County Standard Construction Specifications. Computations shall be submitted showing the ability of the conduit to withstand local buckling unless the design conforms to Standard Drawing 7-12.

E. **Bedding and Initial Backfill** - Bedding types and factors shall conform to Standard Drawing 7-4. Bedding and initial backfill type shall be as necessitated by height of cover over the pipe, trench width, pipe strength, and other factors used to determine safe pipe loading. Special attention shall be given to backfill requirements for pipe located in State rights-of-way and for pipe placed in areas where trench width is excessive, such as in the vicinity of bore pits. See Section 7-13 regarding this condition. Any special backfill requirements shall be noted on the plans.

Unless otherwise noted on the plans, bedding and initial backfill for all pipe sizes shall be Type II, with trench widths subject to limitations set forth in Standard Drawing 7-

15 and in the Standard Specifications. The minimum trench width for all ridged pipe shall be pipe O.D. plus 12 inches.

Bedding and initial backfill for flexible conduit shall by Type II Alternate utilizing imported material to twelve inches above the top of the pipe. Placement of native material between springline and twelve inches above the top of pipe will not be permitted. The minimum trench width for flexible pipe shall be pipe O.D. plus 24 inches.

Type III and IV bedding and initial backfill are intended primarily for emergency field conditions. Their use shall normally not be specified on the plans and shall require specific written approval of the Director before use. Type III and IV bedding and initial backfill shall not be used with flexible pipe materials.

F. **Special Pipe Strength Requirements** - Ductile iron, or other high-strength pipe approved by the Director, shall be used whenever cover is greater than 25 feet or extra support strength is required. Ductile iron pipe, Class 200 (DR-14) PVC pipe conforming to the requirements of AWWA C900 or other high-strength pipe approved by the Director shall be used whenever cover is less than four feet, or insufficient clearance exists between the sewer pipe and rigid or load transmitting structures.

G. **Design Guide** - Tables which relate cover, pipe diameter, trench width, bedding and initial backfill type for vitrified clay pipe according to the procedures contained in these Standards, are provided on Standard Drawing 7-15.

7-8 MANHOLE CRITERIA: The design criteria for manholes are as follows:

A. **General** - Manholes shall be placed at the intersections of all sanitary sewer lines, at the end of any line terminating with a cul-de-sac which has five or more lots fronting on the cul-de-sac, at the end of all permanent lines 120 feet or more in length, and at the end of any temporary line more than 200 feet in length. All manholes from which sewer line extensions are anticipated shall have a pipe stub installed at the grade and in the direction of the anticipated extension. Summit manholes connecting two sewer collectors are not acceptable. Manholes in PVC collector systems shall be located to reduce or eliminate the need to curve the collector pipes.

B. **Spacing** -Maximum spacing of manholes shall be 400 feet for all straight lines of ten - inch diameter or less. A line with a radius greater than 400 feet shall be considered as straight for purposes of this section. Manhole spacing on lines, which are on a continuous curve of 194-foot radius (min. allowable) shall be 200 feet. Manhole spacing on curved lines of radius between 194 and 400 feet, or where only a portion of the line is curved, shall be adjusted proportionately. Reverse curves require a manhole at the point of tangency between the curves. A manhole shall be required at any

change in vertical alignment, unless the use of a vertical curve is approved by the Director. A manhole shall also be placed at any abrupt change in horizontal alignment.

C. **Elevation Criteria** - When two lines of the same size enter a manhole such that the flow of one must change direction more than 20 degrees or if flow in a single line must change direction more than that amount, the invert grade at the exit must be at least 0.10 foot below that of the entrance pipe or, as a maximum, the crown of the exit pipe shall match the invert of the entrance pipe. If the pipes entering and exiting any manhole are not of the same size, the minimum invert elevation differential shall be that which occurs when the pipes are matched crown to crown and the maximum invert elevation differential shall be based on the invert of the entering pipe matching the crown of the exit pipe. Drop connections are not governed by the above elevation requirements.

D. **Construction Requirements** - Manhole construction shall conform to the provisions of Standard Drawing 7-1, 7-1A, 7-1B, 7-2A and 7-2B. Lock-type or pressure-type manhole covers as shown in Standard Drawing 7-11A shall be used on manholes located in easements and areas subject to flooding. If the distance from the crown of the pipe to the top of the rim is less than 6'11" an 18-inch high cone shall be used. Manholes which have through lines and less than 5'8" from the crown of the pipe to the rim shall use flat slab tops. The plans shall note that the frame on manholes located in unimproved areas shall be set 12 inches above existing ground level. Manholes for flexible conduit shall be designed such that flexing of the pipe does not result in infiltration or exfiltration at the interface between manhole and pipe. Specially designed flexible boots or integrally cast bells may be required by the Director. Pipe material, which does not provide adequate bonding between pipe and manhole, may similarly require special designs.

E. **Connections to the Interceptor System** - Improvement plans which require a connection to a SRCSD interceptor or interceptor structure shall include a note specifying that the SRCSD staff be notified at least two working days in advance of the start of intended construction. This is necessary to allow for the special inspection procedures that will apply to such construction.

F. **Vacuum Testing** - shall be performed per ASTM C 1244-93 on all manholes.

7-9 DROP CONNECTION CRITERIA: Drop connections shall be avoided when possible. Drops will be required when adjacent parallel sewer pipes tie into the same manhole. Drop connections shall conform to Standard Drawing 7-3. The inside drop connection shall be used for four through ten-inch diameter collectors and services. There shall be no more than two inside drop connections into a four-foot diameter manhole. Whenever possible, the

slope of the incoming line shall be increased to eliminate the need for the drop. Except as identified above drop connections less than 16 feet will not be allowed.

7-10 FLUSHING BRANCH CRITERIA: A flushing branch may be used in lieu of a manhole at the end of any collector less than 120 feet in length. A flushing branch may also be used at the end of a collector less than 200 feet in length if the collector extends to a subdivision boundary and if there are definite plans for its extension. If a collector extends to a subdivision boundary, is planned for definite extension, and has no service sewer connections, it may be capped. Flushing branches shall conform to Standard Drawing 7-6 and 7-6A.

7-11 SERVICE SEWER DESIGN: The design criteria for service sewers are as follows:

A. **General** - Service sewers shall conform to Standard Drawing 7-5 and shall be constructed normal to the lateral unless otherwise approved by the Director. The service sewer shall extend from the collector sewer to the edge of public right of way or edge of easement unless a water main is to be installed at the back of the sidewalk as part of the subdivision improvements. In such cases the service is to be extended to seven feet back of the sidewalk. The cleanout to grade is to remain within two feet of the back of the sidewalk. See Note 10 of Standard Drawing 7-5 for cover requirements. Service sewers shall extend one foot beyond the edge of the pavement of any private road and easements of adequate width to accommodate the services shall be obtained. A plan and profile of any service sewer shall be supplied to the Director upon request. Construction of the cleanout to grade for all sewer services is required. Construction of the top 1 foot of the cleanout riser may be delayed until the installation of the building sewer at the option of the developer, except where the water main is to be installed at the back of the sidewalk (refer to Note 10: Standard Drawing 7-5). If construction of the top 1 foot of the riser is delayed, the location shall be accurately staked with a 4"x 4" post.

B. **Sizing** - Normal service sewer size is four inches for residential and six inches for commercial. Six-inch or larger service sewers shall serve schools and other developments expected to contribute high sewage flows. In addition, service sewers shall be sized according to requirements of the Uniform Plumbing Code, the Water Quality Division, and determinations by the Consulting Engineer. If the service sewer and collector are of the same size, a manhole must be constructed; if the collector is larger than the service sewer, a factory fitting at the connection is satisfactory. Service sewer connection to trunk service will not be allowed. Collector service shall be allowed to connect to trunk sewer as directed by CSD-1.

C. **Construction by County Forces** - The Water Quality Division, upon application for permit and payment of required fees, shall construct all service sewers from existing sewers and manholes to individual residential lots and commercial, multiple

residential, and industrial developments. If existing collectors and manholes are being utilized for service connections in constructing new subdivision improvements, the requirements shall apply only to County forces making the taps. A note to this effect shall be placed on any plan sheet, which indicates a connection to the existing system.

D. **Connection Limitations** - Service sewers shall not directly connect to sewer lines designed to flow full or to lines more than 16 feet in depth without the approval of the Director.

E. **Material** - The "T" or "Y" and the service shall be of the same material as the collector to which it connects, except that ABS Schedule 40 per ASTM 2661 pipe may be connected to a VCP "T" or "Y" as shown on Standard Drawing 7-5. Also see Section 7-11 G.

F. **Location** - When sanitary sewers are constructed as part of new subdivision improvements, a service sewer shall be constructed to each lot. In new subdivisions or developed areas, unless specifically requested otherwise in writing by the property owner or Consulting Engineer, service sewers shall be placed on the low side of any subdivision lot or similar parcel with two percent or greater slope across the front or shall. Otherwise, the sewer service shall be placed in the center of said lot or parcel. Consideration shall be given to trees, improvements, proposed driveways etc., so as to minimize interference when the service sewer is extended to service the house. If the property is located such that service is available both to a line located in an easement and also in right of way, service shall be to the latter location unless otherwise approved by the director. No service sewer shall be located such that future on site construction will result in the line being in such proximity to a water well or water main or service that applicable health standards will be violated.

G. **Depth** - The Consulting Engineer shall verify the adequacy of the normal service sewer depth at the edge of easement or right of way to serve the intended parcel. A depth of five feet to crown of pipe, measured from existing ground surface or edge of adjacent roadway, whichever is lower, shall be considered normal service sewer depth, except under conditions stated in Note 10 on Standard Drawing 7-5. Whenever greater depth is required, the Consulting Engineer shall designate the invert elevation of the service sewer at the edge of the right of way or easement on the construction plans. If the service has less than three feet of cover measured from the gutter flowline, ductile iron pipe, Class 200 (DR-14) PVC pipe conforming to the requirements of AWWA C900, or other high strength pipe approved by the Director, shall be used. If a joint trench is being utilized for other utilities, the Consulting Engineer shall indicate on the plans that a Joint trench will exist and shall adjust service elevations as necessary. It shall be the responsibility of the Consulting Engineer to arrange for coordination of the grade of utilities located in the joint trench and the service sewers.

H. **Special Requirements in Developed Areas** - In developed areas, a service sewer shall be provided to each parcel participating in the project containing a source of sewage and having a property line less than 200 feet from a collector. A property owner's request for service location shall be honored whenever practicable. Parcels, which have two or more sources of sewage, must have an independent service sewer provided to each sewage source, which can be separated from the rest of the parcel and sold. A service sewer shall be provided to each subdivision lot or lot similar as to size and possible development. At an early stage of design, the Consulting Engineer shall send every property owner affected by the proposed work a questionnaire requesting, in writing, the owner's preferred service sewer location. In absence of a response to this questionnaire, the Consulting Engineer shall provide a service sewer as required by this Section. In addition, when service sewers are staked immediately prior to construction, each property owner shall be given notice that he should give consideration to the staked location of his service sewer and, if not satisfactory, immediately notify the Consulting Engineer. The date of notification, nature of change, and other pertinent information shall be recorded. Compilation of this information shall be the responsibility of the Consulting Engineer and the information shall be furnished to the Director upon request.

7-12 CREEK CROSSING DESIGN: Advance approval of the Director and of other appropriate agencies is necessary prior to initiating design. The criteria for creek crossing design is as follows:

A. **General** - In all cases, the proposed future creek bed elevation shall be used for design purposes. Crossing details of pipe, piers, anchorage, transition couplings, etc., shall be shown upon a detail sheet of the plans in large scale.

B. **Design** - Calculations shall be submitted which clearly indicate the design of the pipe and supports regarding impact, horizontal and vertical forces, overturning, pier and anchorage reactions, etc.

C. **Construction and Material** - For collector sizes ten inches and smaller, ductile iron pipe or other pipe material as approved by the Director shall be used under the full creek width, plus ten feet each side, unless the pipe is four feet or more below the creek bed elevation. For line sizes twelve inches and larger, pipe used shall be as directed by the Director. Special care shall be taken to provide a firm base for the pipe bedding. The plans shall specify that all soft or organic material within the creek banks shall be replaced with select imported backfill. In addition, the pipe shall be encased in concrete or soil cement shall be used to protect the pipe for the full width of the creek. Unless otherwise directed a clay plug shall be required at the top of the pipe at the downstream side of the crossing. The plug shall be a minimum of four feet in length, shall extend the full width of the trench, and shall extend twelve inches above and below the pipe or as approved by the Director.

If the pipe must cross above the creek bed, ductile iron or welded steel pipe shall be used. Steel pipe may be cement lined and coated, fusion epoxy lined and coated, or glass lined; the Director shall approve the type of coating and lining specified, and the gauge, class, or thickness of the pipe. The Director may specify which is to be used.

Reinforced concrete piers of adequate depth shall be located as necessary for adequate support of the pipe. The pipe shall be held in cylindrical cradles, formed in the pier tops, by galvanized steel straps, with galvanized anchor bolts of adequate size. Cushion material shall be placed between the pipe, clamps, and support. The invert elevation at the point of maximum deflection of the suspended pipe shall be invert of the pipe at its downstream support.

7-13 BORING AND JACKING REQUIREMENTS: Where use of conductor casing is specified, the casing shall be corrugated steel pipe, reinforced concrete pipe, or welded steel pipe. The casing shall be of sufficient diameter to allow dry sand to be blown into the void between the carrier and the conductor and to allow adjustment of the carrier pipe to grade. Normally, an inside diameter six inches greater than the outside diameter of the couplings of the carrier pipe is sufficient. Welded steel conductor pipe shall have a minimum wall thickness of ¼ inch for sizes up to and including 24 inches in diameter and 5/16 inch for sizes 27 inches to 36 inches in diameter. Corrugated steel pipe conductor shall not be less than 10 gauge for sizes up to 36 inches, an 8 gauge for diameters to 60 inches. Every R.C.P. conductor must be designed for the loading condition and, if jacked, the additional loading imposed by the jacking operation.

Direct dry boring of reinforced concrete pipe and of the portion of sewers and service sewers, which pass beneath curbs and gutter, sidewalks, and other obstructions, up to a maximum length of 15 feet, is permissible. Six-inch and smaller pipelines may be installed by wet boring where approved by the Director. Pipe material used in the small size dry and wet bores shall be ductile iron pipe, or Class 200 (DR-14) PVC pipe conforming to the requirements of AWWA C900. Installation and other material specifications shall conform to the requirements of the Standard Specifications.

Backfill in bore pits shall be given special attention with respect to preventing structural failure of the pipe entering or exiting the conductor, and adequate bedding and initial backfill shall be specified.

7-14 PUMP STATION AND FORCE MAIN REQUIREMENTS: Every phase of pump station design, including force mains, shall be closely coordinated with and shall be under the direction of CSD-1. CSD-1 will make sample plan sheets available to the Consulting Engineer which will show the general layout and control system required for a typical acceptable sewage pump station. The plans shall show the testing required prior to acceptance

of the pump station. Unless otherwise approved by the Director, "fee title" shall be granted to the Sacramento Regional County Sanitation District or County Sanitation District 1.

7-15 SEWER IMPROVEMENT PLAN REQUIREMENTS: Plans for the construction of sanitary sewers whether in conjunction with other improvements or for a sewer project only, shall conform to the following standards, as well as other standards contained in the General and Plan Sheet Requirements of these Improvement Standards.

A. **General Requirements.-.**Plans for sewer improvement projects should include a layout sheet, plan and profile of each sewer line, and any necessary detail drawings. The plans must be clearly legible and conform to accepted practice with respect to drafting standards. All information, which, in the opinion of the Director, is necessary for the satisfactory design, review, construction, and maintenance of a project shall be provided and, where applicable, shall be shown on the plans.

B. **Layout Sheet -** All sewer improvement plans shall include an overall map, which shows the project boundaries, sewer lines, manholes, flushing branches, and other important items of the work. Where pavement is to be cut in several locations, the pavement replacement requirements shall be shown on the layout sheet.

A parcel or area which benefits from and financially participates in a sewer construction project, but is not included within the project boundaries, shall have a note to this effect placed on the layout map and on the plan and profile sheet if the parcel appears thereon. Parcels, which make use of those facilities, may be subject to additional fees at the time of connection, if the participation has not been so noted.

C. **Plan and Profile Sheets -** Sewers which are to be maintained by County Sanitation District 1 shall be shown in both plan and profile views (adjacently aligned on the same sheet) on approved plan and profile paper. The following standards, with respect to drafting and the information to be included on the plan and profile sheets, generally apply to projects in developed areas. In new subdivisions, only the requirements that are applicable shall apply.

1. Sewer lines to be constructed shall be indicated on the profile by parallel lines spaced by one pipe diameter. Manholes shall also be indicated by parallel lines spaced according to scale. Slope shall be printed 1/8 inch above, and preferably parallel to, the pipeline, or between the parallel lines. The length, size, and type of pipe material between each manhole shall be printed parallel to the horizontal grid lines and approximately halfway between the ground surface and pipeline. All pipe inverts at manholes and other structures shall be indicated on the profile. The invert elevations shall be printed parallel to the horizontal grid lines and shall be under scored by a line which then runs at a 45-degree angle to the corresponding

pipe invert. When manholes, manholes with drop connections, flushing branches, or other appurtenances are to be constructed, the profile shall be so noted. Cone heights of 18" and 24" shall be clearly labeled for those manholes requiring the shorter cones due to lack of available depth. Existing facilities shall be shown in profile using dashed lines. Manhole identification on the plan view will be oblique. Stationing shall appear at the lower edge of the profile grid directly under the manhole.

2. In improved areas, the location of each service sewer proposed to be constructed shall be indicated on the plans by stationing, or by reference to a permanent, well-defined structure, if available. In new subdivisions, the service sewers shall be located by stationing unless the situation exists, such as at the end of a cul-de-sac, where stationing is not an adequate description of location. In such cases a dimension to a lot line may be used. The invert elevation of the service sewer at its upstream end shall be shown on the plans whenever the service is not at standard depth. Standard depth shall conform to the conditions set forth on Standard Drawing 7-5.

Improvements or lots shown on a plan sheet but served to a line shown on another plan sheet shall have the direction of service shown by a small triangle and letter "S".

3. Both permanent and working easement shall be shown to scale on the plans. Easement dimensions shall be given and each easement shall be tied to both the property line and the sewer line. Each permanent easement shown on the plans shall be identified by a box or table, on the same plan sheet, which gives the property owner's name and the book and page number in which the easement is recorded. The Consulting Engineer shall provide the book and page number.

4. Proposed sewer lines shall be adequately dimensioned from street centerline. If the sewer is to be located outside of the right of way, sufficient dimensions and bearings from an approved horizontal control shall be shown on the plans to locate the line in the field.

5. Indicate the limiting maximum trench width, as measured at the top of the pipe, on the plans between well-defined points of application, the pipe material and class, if more than one class is available; and the bedding-backfill type. If more than one combination of pipe material or class, maximum limiting trench width, or bedding type is available, a practical range of such combinations shall be shown on the plans.

6. Gas, water, storm sewers, and all other main utility lines above or below ground shall be determined and shown on the plans with accuracy as great as practicable. The location of any utility line which is parallel to and within five feet of the sewer

line or which crosses the sewer line at an angle of 30 degrees or less shall be determined with an accuracy of +/- 1.0 foot and the clearance shown on the plans. Service lines such as water and gas normally shall not be shown.

7. Trees and other objects within 10 feet of construction centerline shall have their correct location shown on the plans and the clearance from construction centerline shown. The diameter of tree trunks and interfering heavy tree branches shall be noted. Removal of a tree or object, or other special handling shall be noted on the plans. The Consulting Engineer shall assume full responsibility for such notes as it is assumed that he has made all necessary arrangements with the owner of the object to be handled. Written documentation of any special arrangements regarding preservation of property made between property owners and the Consulting Engineer shall be supplied to the Director if no easement document is involved. If an easement is negotiated, all special arrangements are to be included in the easement document. The Director must approve tree removal within public rights-of-way or easements.

8. Culverts shall be shown on both plan and profile when crossed by the construction or when parallel and within 20 feet of the construction line. The size and type of all such culverts shall be indicated and when the culvert crosses or is perpendicular or nearly so and within 20 feet of the construction line, the invert of the culvert end nearest the construction line shall be shown.

9. Addresses of buildings shall be shown on the plan view, within the outline of the building. Only the front line and indication of sidelines of buildings need be shown.

D. **Detail Drawings** - Items of a special nature should be shown with detail drawings, either on the plan sheets, or on a separate detail sheet.

E. **Connection to existing** facilities where bypassing or stoppage of existing flow will be **required** - When improvement plans require connection to an existing facility which will require bypassing or stoppage of existing flows, a note shall be placed on the plans which provides an estimate of the existing flow to be bypassed (in gpm), or the times between which the flow may be stopped. Coordination with the Water Quality Division Engineering Section is required in developing these numbers. The note shall also require the contractor to contact the Water Quality Maintenance Section at least 48 hours prior to initiating the bypass/stoppage operation so the temporary facilities and equipment can be evaluated for adequacy. Where the bypassing/stoppage operation will be accomplished on a major trunk or interceptor, submittal of a work plan for review may be required prior to initiation of the operation.

7-16 DESIGN OF ON-SITE SEWER SYSTEMS FOR PRIVATE MULTIPLE OWNERSHIP RESIDENTIAL DEVELOPMENTS: The following design requirements shall apply to that portion of the sanitary sewer system within a privately owned multiple ownership development that is "on-site" and is not an outfall sewer for an upstream area, thereby being considered a private system and not subject to maintenance by County forces.

A. **Planned Unit Developments and Townhouses** - Residential developments where separate lots and structures are sold. These differ from usual subdivisions in that adjacent land is owned in common and a homeowner's association performs maintenance.

1. General - Sanitary sewers shall meet all requirements for public sewers contained in these Improvement Standards, except as specified below.

2. Manhole spacing - Maximum spacing of manholes on collectors shall be 300 feet for all straight runs of pipe.

3. Wyes - Wyes shall be used for all service sewers connecting to the "on-site" collectors. Tees as shown on Standard Drawing 7-5 are not allowed.

4. Minimum Depth - All collectors located within vehicular traffic areas shall have a minimum cover of five feet to finish grade. Additionally, if the cover over the pipe at any location may be less than two feet at any time after the pipe is installed, ductile iron pipe or Class 200 (DR-14) PVC pipe conforming to the requirements of AWWA C900 shall be installed.

5. Plan and Profile Sheets - "On-site" improvement plans may be prepared without the sanitary sewer profile that is required by these Improvement Standards, unless otherwise instructed by the Director. However, the final "on-site" grades and drainage facilities must be shown on the plans on the same sheet as the plan view of the sanitary sewers. Pipe dimensions shall be shown adjacent to the corresponding pipe section. The use of charts shall not be permitted for pipe dimensioning purposes. Plan sheet sizes shall be as specified in Section 3-1 of these Improvement Standards.

6. Backwater Valves - Backwater valve requirements as specified in the appropriate sewer use ordinance shall apply to all service sewers.

7. Location - Wherever possible, collectors shall be located in areas to be paved.

8. Review and Approval - Plans must be reviewed and approved by the Water Quality Division of the Public Works Agency.

B. **Condominiums or Cooperative Developments** - Attached residential homes where shares of the total development are sold.

The "on-site" sanitary sewers may be constructed as required by the most current edition of the Uniform Plumbing Code (UPC) adopted by the Board of Supervisors. These plans will require the approval of the Water Quality Division of the Public Works Agency in addition to the standard approvals required. The developer has the option of designing the "on-site" sanitary sewers under the requirements of Section 7-15A. If "on-site" sewers are designed in accordance with the standards for Planned Unit Developments, the plans will be reviewed and approved as set forth in Section 7-15A. Approval will be subject to. compliance with those standards

7-17 MULTI-STRUCTURAL COMMERCIAL AND INDUSTRIAL DEVELOPMENTS: The "on-site" sanitary sewers for all new commercial and industrial developments containing more than one structure shall be designed in accordance with the requirements contained in Section 7-16A of these standards unless otherwise specified by the Director. Each separate_building within a multi-building commercial or industrial development shall have its own separate connection to a sewer system designed to public standards.

7-18 SUB-AREA SEWER SERVICE PLAN (SASSP): Submission of a Sub-Area Sewer Service Plan (SASSP) is required prior to review of the sewer design if there is a possibility that upstream or adjacent areas might require service through the subject property. A SASSP is a plan to provide sewer service to a specific portion of CSD-1. A sub-service area is that portion of the CSD-1 service area, which is directed to an individual sewer trunk pipeline. The plan will fully describe the area to be served by the local collection facilities and the facilities necessary to provide that service.

A. **General Requirements** - In order to develop a SASSP the following information must be accumulated:

1. Regional Setting
2. Topographic map of the area to be served
3. Any specific projects which precipitated the study
4. Relevant assumptions or special conditions
5. Existing and proposed development
6. Ultimate development within the SASSP area
7. Hydraulic grade line at point of discharge into major facilities

The flows generated within each sub-service area of the sub-area plan will be calculated in accordance with the procedures contained in Section 7-2 and 7-3 of these standards unless otherwise specified by the Director.

B. **Study Map** - The method of sewering the entire service area, including pipe sizes and slopes, shall be shown to the extent necessary to determine the requirements within the subject property.

C. **Report Preparation**: - In order to insure that all SASSPs are compatible and easy to understand, they will all be published in the following format.

1. Section Headings - Each SASSP shall be written with the following sections entitled as follows:

   a. Executive Summary - A concise description of the recommended sewer system, the impacts upon the Regional system, and any special design criteria necessary due to unusual local conditions.

   b. Introduction - A thorough background description of the sewer shed, any specific project(s) which precipitated the study, any special conditions, a vicinity map and a topographic map of the study area

   c. Criteria and Data - All of the information upon which the plan was based shall be delineated in this section in an easily readable manner.

   d. Plan description - A map showing the service area, the needed sewer facilities (pipes, slopes, flowlines, depths, and service areas), a spread sheet summary, and verbiage describing the collection system shall be included in this section

   e. Appendices - All of the backup information shall be included in an appropriate number of appendices

2. Report Format - The SASSP shall be bound as a single document with appropriate dividers between each section and pockets for all the required maps. The approval block shall be in a highly visible location at the end of the Executive Summary.

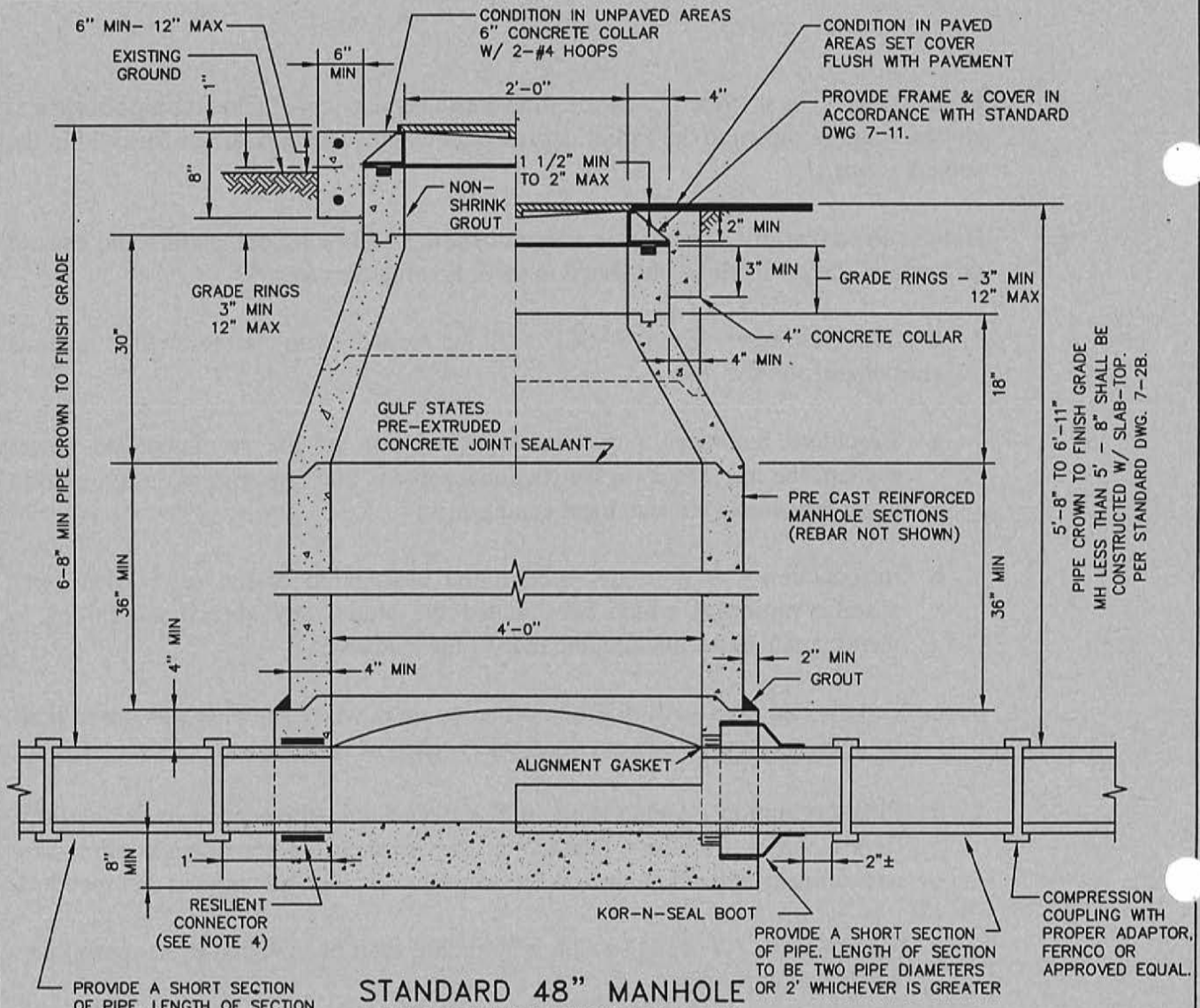

STANDARD 48" MANHOLE

FOR SANITARY SEWER 24" DIAMETER OR LESS
SEE 7-1A FOR REBAR

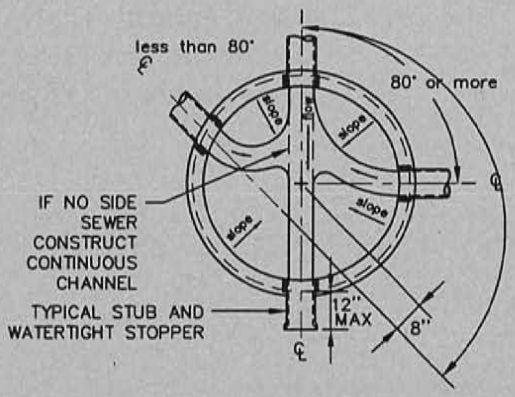

PLAN VIEW OF 48" MANHOLE SHOWING INTERSECTING SEWERS

GENERAL NOTES -

1. CLASS A CONCRETE SHALL BE USED FOR MANHOLE BASES.
2. PIPE SHALL STOP AT INSIDE FACE OF MANHOLE OR SHALL BE CONTINUOUS THROUGH MANHOLE. IF PIPE LAID CONTINUOUS, TOP HALF SHALL BE REMOVED AFTER BASE IS POURED.
3. JOINTS FOR THE BARREL SECTION SHALL BE TONGUE AND GROOVE, ALL LIFTING HOLES SHALL BE SEALED WITH NON METALIC NON-SHRINK GROUT.
4. FOR PRECAST MANHOLE BASES, CONNECTION OF THE PIPE TO THE MANHOLE SHALL USE A RESILIENT CONNECTOR CONFORMING TO ASTM STANDARD C923 SUCH AS KOR-N-SEAL, A-LOK, OR EQUAL.
5. ANY SERVICE SEWER ENTERING A MANHOLE SHALL BE INSTALLED WITH THE INVERT ELEVATION OF THE SERVICE PIPE MATCHING THE CROWN ELEVATION OF THE EXIT SEWER EXCEPT WHEN AN INTERNAL DROP CONNECTION IS USED. IF THE MANHOLE AT THE END OF A CUL-DE-SAC IS CONSTRUCTED WITH A PRE CAST BASE, THE INVERT OF ANY SERVICE STUBS SHALL BE A MINIMUM OF ONE INCH ABOVE THE INVERT OF THE EXIT PIPE.
6. BEDDING FOR PRE CAST MANHOLE SHALL BE SELECT IMPORTED MATERIAL 1/2" OR 3/4" CRUSHED ROCK.
7. THE STANDARD CONE MAY BE PROVIDED AS TWO PRE CAST SECTIONS.
8. FOR ASPHALTIC CONCRETE OVERLAYS ONLY, MANHOLES WITH DEPTHS OF 8' AND GREATER (MEASURED FROM THE FLOW LINE TO THE TOP OF CASING) THE MAXIMUM THROAT DEPTH IS 24 INCHES.
9. CUL-DE-SAC MANHOLES OR END OF LINE MANHOLES WITH A DEPTH OF 6'11" OR LESS SHALL USE 18" CONES.

Robert J. Shanks
DIRECTOR

SACRAMENTO COUNTY
PUBLIC WORKS AGENCY

STANDARD 48" SEWER MANHOLES

DRAWN BY: DAH
SCALE: NONE
DATE: 4/97

7-1

CAMERA CHANNEL REQUIRED FOR
ALL 8" AND 10" LINES

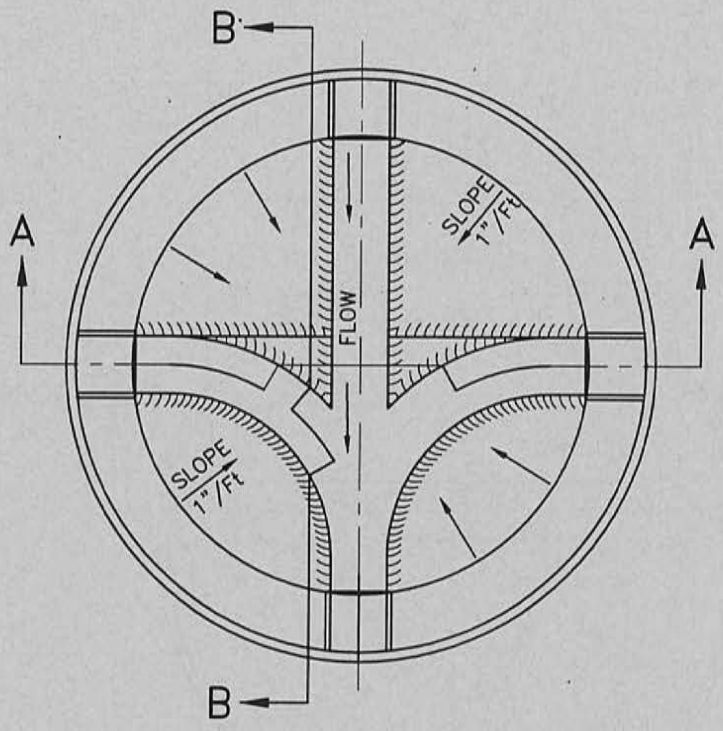

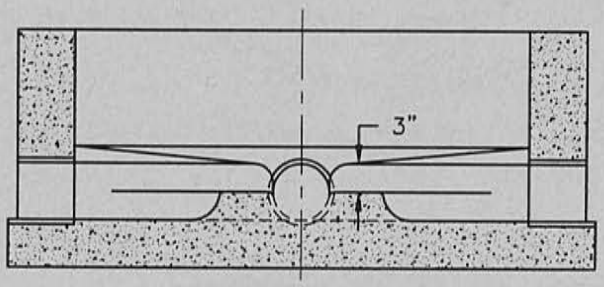

SECTION A–A

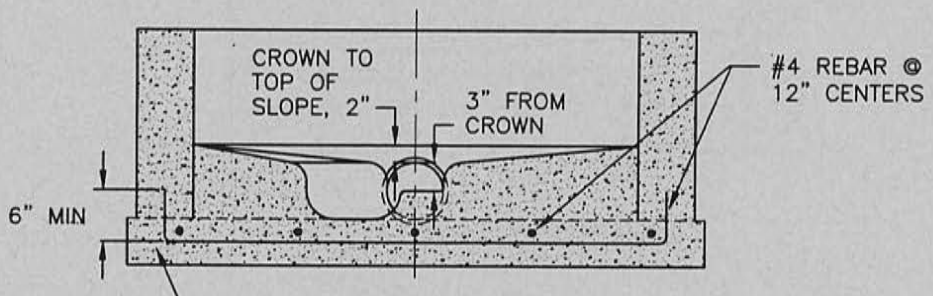

SECTION B–B

CONCRETE BASE MAY BE CAST–IN–PLACE AND POURED AGAINST UNDISTURBED MATERIAL OR PRE CAST AND PLACED ON 4" MIN OF CRUSHED ROCK PLACED OVER UNDISTURBED MATERIAL

Robert J. Shaw
DIRECTOR

SACRAMENTO COUNTY
PUBLIC WORKS AGENCY

MANHOLE BASE
CAMERA CHANNEL
DETAIL

DRAWN BY: DAH
SCALE: NONE
DATE: 4/97

7-1A

CAMERA CHANNEL REQUIRED FOR
ALL 8" AND 10" LINES

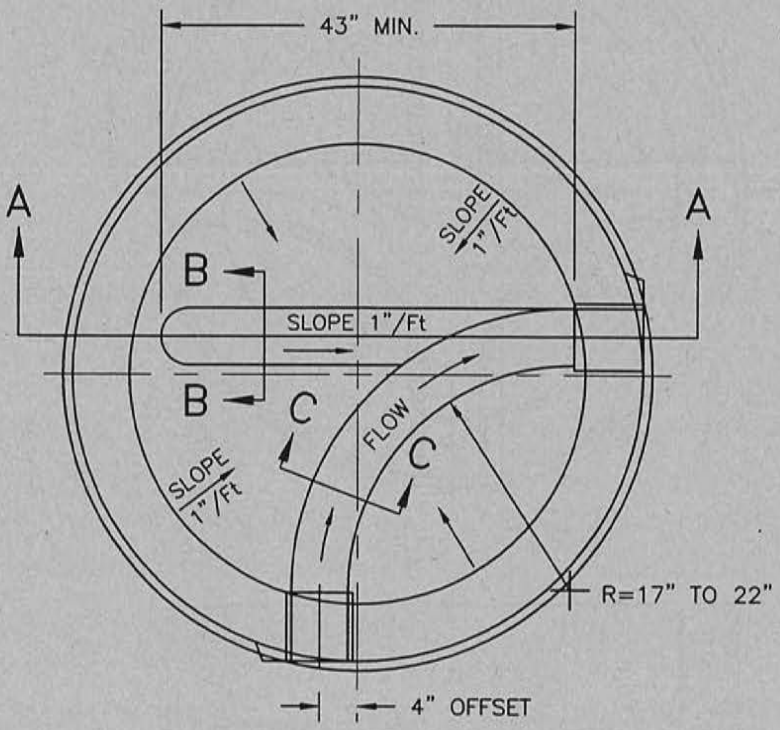

FOR 8" LINE ONLY

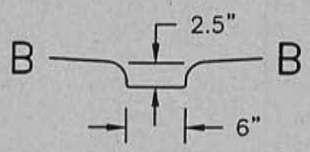

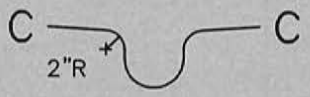

OR

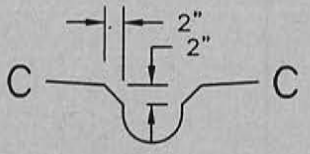

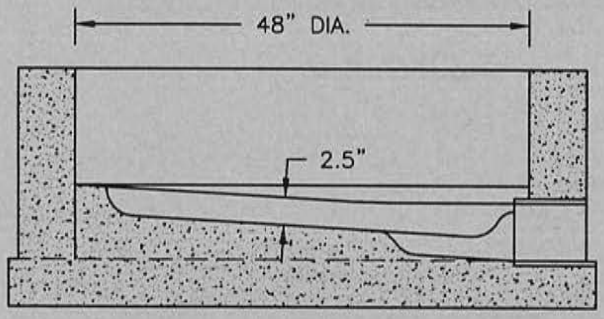

SECTION A–A

REBAR PATTERN PER 7–1A, SECTION B–B

Robert J. Thomas
DIRECTOR

SACRAMENTO COUNTY PUBLIC WORKS AGENCY	
MANHOLE BASE CAMERA CHANNEL DETAIL	
DRAWN BY: DAH SCALE: NONE DATE: 4/97	**7-1B**

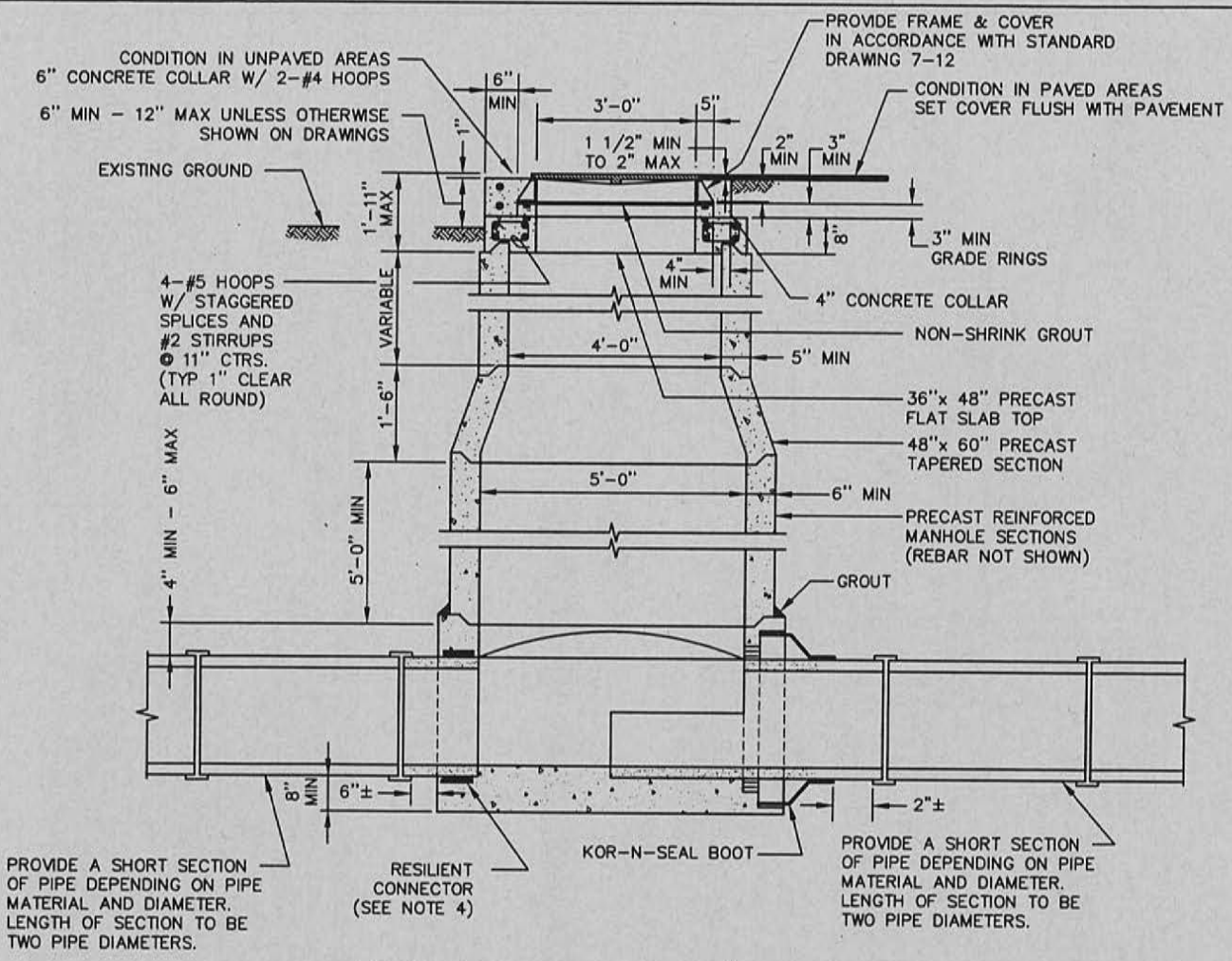

STANDARD TYPE A 60" MANHOLE

GENERAL NOTES -

1. CLASS A CONCRETE SHALL BE USED FOR MANHOLE BASES.
2. PIPE SHALL STOP AT INSIDE FACE OF MANHOLE OR SHALL BE CONTINUOUS THROUGH MANHOLE. IF PIPE LAID CONTINUOUS, TOP HALF SHALL BE REMOVED AFTER BASE IS POURED.
3. JOINTS FOR THE BARREL SECTION SHALL BE TONGUE AND GROOVE. ALL JOINTS MUST BE SEALED WITH GULF STATES PRE-EXTRUDED CONCRETE JOINT SEALANT.
4. FOR PRECAST MANHOLE BASES, CONNECTION OF THE PIPE TO THE MANHOLE SHALL USE A RESILIENT CONNECTOR CONFORMING TO ASTM STANDARD C923 SUCH AS KOR-N-SEAL, A-LOK, OR EQUAL.
5. ANY SERVICE SEWER ENTERING A MANHOLE SHALL BE INSTALLED WITH THE INVERT ELEVATION OF THE SERVICE PIPE MATCHING THE CROWN ELEVATION OF THE EXIT SEWER EXCEPT WHEN AN INTERNAL DROP CONNECTION IS USED.
6. BEDDING FOR PRE-CAST MANHOLE SHALL BE SELECT IMPORTED MATERIAL 1/2" OR 3/4" CRUSHED ROCK.
7. FOR ASPHALTIC CONCRETE OVERLAYS ONLY, MANHOLES WITH DEPTHS OF 8' AND GREATER (MEASURED FROM THE FLOW LINE TO THE TOP OF CASING) THE MAXIMUM THROAT DEPTH IS 24 INCHES.
8. ALL MANHOLE SECTIONS TO BE FITTED WITH EXTERNAL LIFTING PINS, NO THROUGH PENETRATION HOLES ALLOWED.

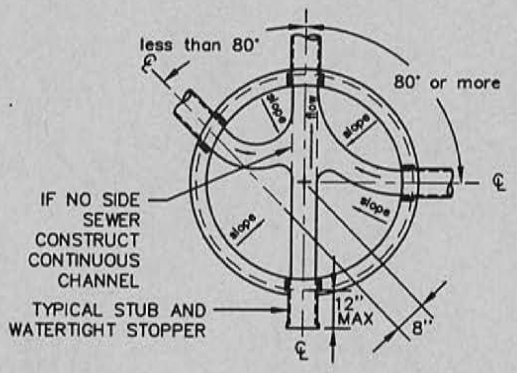

PLAN VIEW OF 60" MANHOLE SHOWING INTERSECTING SEWERS

Robert D. Shanks
DIRECTOR

SACRAMENTO COUNTY
PUBLIC WORKS AGENCY

STANDARD 60" SEWER MANHOLES (TYPE A)

DRAWN BY: DAH
SCALE: NONE
DATE: 4/97

7-2A

GENERAL NOTES –

1. PROTECTIVE COATING SHALL BE (a) QUANTUM AS MANUFACTURED BY POLYMORPHIC POLYMER'S CORP. OF MIAMI SHORES, FL. MINIMUM THICKNESS OF MULTI-LAYERED MODIFIED UNSATURATED POLYESTER COATING SHALL BE 125 mil. (b) CONCRESIVE 1305 AS MANUFACTURED BY ADHESIVE ENGINEERING CO. OF SAN CARLOS CA. MINIMUM THICKNESS OF MULTI-LAYERED SPRAY APPLIED AMINE CURED EPOXY SHALL BE 40 mils. (c) OR EQUAL.
2. BOTH PVC LINING AND PROTECTIVE COATINGS SHALL BE SPARK TESTED FOR INTEGRITY AFTER INSTALLATION.
3. PROTECTIVE COATING SHALL BE APPLIED TO MANHOLE SHELVES, UNDERSIDE OF COVER SLAB, INSIDE OF GRADE RINGS AND ALL OTHER PLACES WHERE PVC IS SHOWN ON DETAIL BELOW.
4. PVC LINER SHALL BE WHITE IN COLOR.

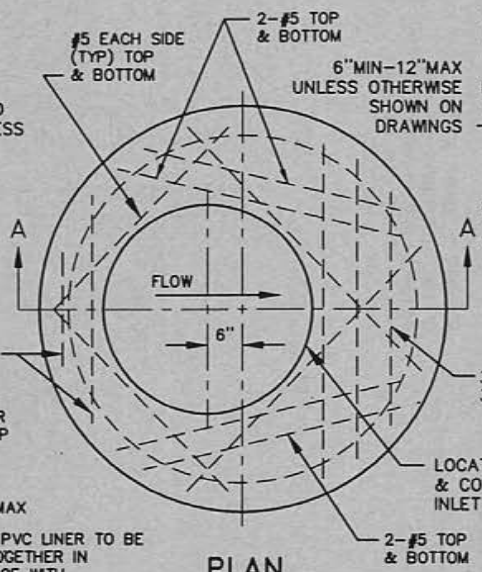

PLAN

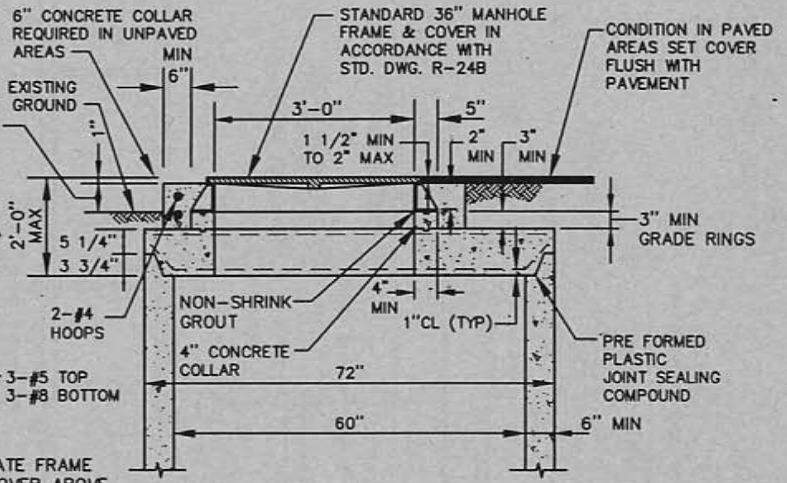

SECTION A-A

STANDARD SLAB TOP DETAILS

NTS

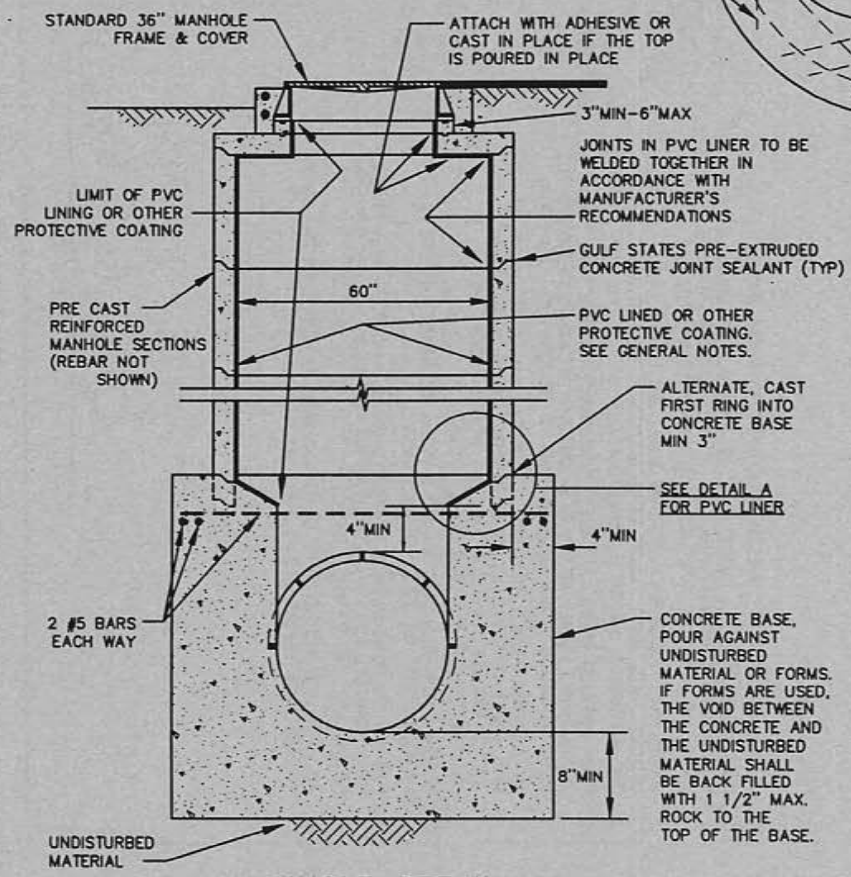

MANHOLE DETAIL

NTS

INSTALLATION REQUIREMENTS FOR PVC SHELF LINER

1. 30 mil PVC SHELF LINER SHALL BE PRECUT AND PREPARED ABOVE GROUND PRIOR TO INSTALLATION WITH SAND EMBEDDED NON-SKID SURFACE 1"± IN FROM EDGE, ACCORDING TO PVC SHEETING MANUFACTURERS RECOMMENDATION.
2. COAT CLEAN AND DRY CONCRETE SURFACE OF M/H SHELVES w/LINABOND PRIMER EP30 AND LINABOND POLYURETHANE MASTIC TO A MIN. THICKNESS OF 125 mil. ALSO COAT CONTACT SIDE OF THE PRECUT PVC SHEETING WITH LINABOND CLA -1 ACTIVATOR ALL AS MANUFACTURED BY ALLIED COATINGS CO. OF HOLLYWOOD, CA OR EQUAL (SUBMITTAL WILL BE REQUIRED)
3. ALL MATERIALS SHALL BE APPLIED ACCORDING TO MANUFACTURER'S RECOMMENDATIONS.

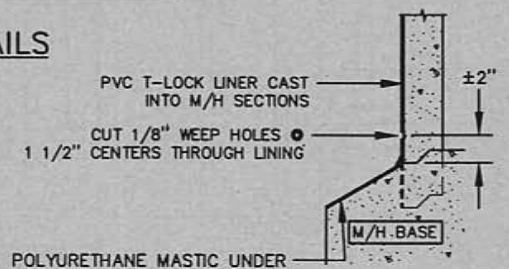

DETAIL A

NTS

Robert J. Shanks

DIRECTOR

SACRAMENTO COUNTY
PUBLIC WORKS AGENCY

STANDARD
60" MANHOLE
(TYPE B)

DRAWN BY: DAH
SCALE: NONE
DATE: 4/97

7-2B

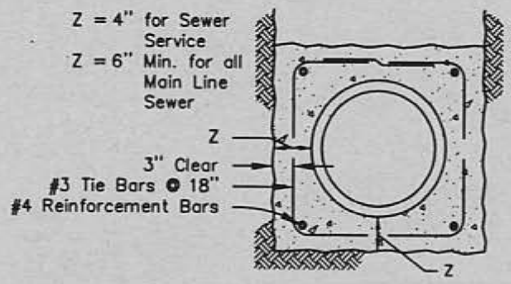

CONCRETE ENCASEMENT

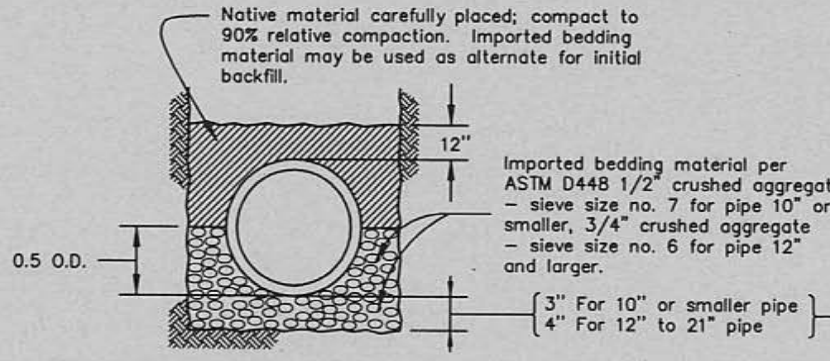

Bedding Factor = 1.9

TYPE II
(See Note 6)

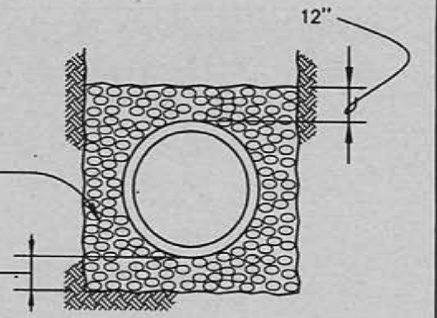

Bedding Factor = 2.2 for 36" or less; for greater than 36" dia. field condition only (see note 3).

TYPE II ALTERNATE

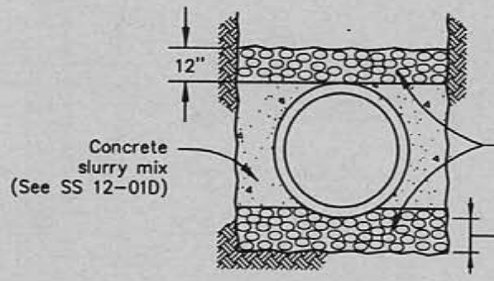

Bedding Factor = 2.7

TYPE III
(See Note 4)

(Concrete must extend from pipe to the trench walls. TYPE III not allowed where soils are expansive)

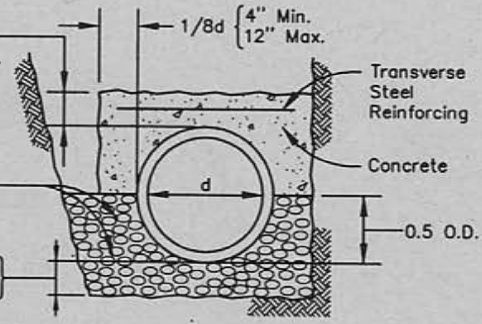

Bedding Factor = 3.4
P = 0.4%

TYPE IV
(See Notes 4 & 5)

Robert Shaw
DIRECTOR

GENERAL NOTES:

1. See Sections SS12-01, 04 and 05 for backfill limits.
2. Minimum depth of bedding and material under pipe bells shall be 1 1/2 inches.
3. For pipe greater than 36" in diameter Type II Alternate shall be allowed only when field encountered construction conditions have resulted in the allowable trench width for Type II being exceeded and calculations must be submitted for the Engineer's approval to determine the appropriate bedding factor for the situation. Design method No. 38 as published by the American Concrete Pipe Association shall be the basis for the calculations. Maximum allowable Bedding Factor is 2.2.
4. Type III and IV may be used only when construction conditions encountered in the field have resulted in the allowable trench width for Type II and Type II Alternate being exceeded. Written approval of the Engineer is necessary.
5. For reinforced concrete, P is the percentage of the area of transverse steel to the area of concrete above the top of the pipe barrel. Use wire mesh or uniformly distributed small diameter rebar.
6. For all flexible (non-rigid) pipe, imported material must be used for bedding and initial backfill to 12 inches over pipe bell.

SACRAMENTO COUNTY
PUBLIC WORKS AGENCY

SEWER PIPE BEDDING & INITIAL BACKFILL

DRAWN BY: DAH
SCALE: NONE
DATE: 4/97

7-4

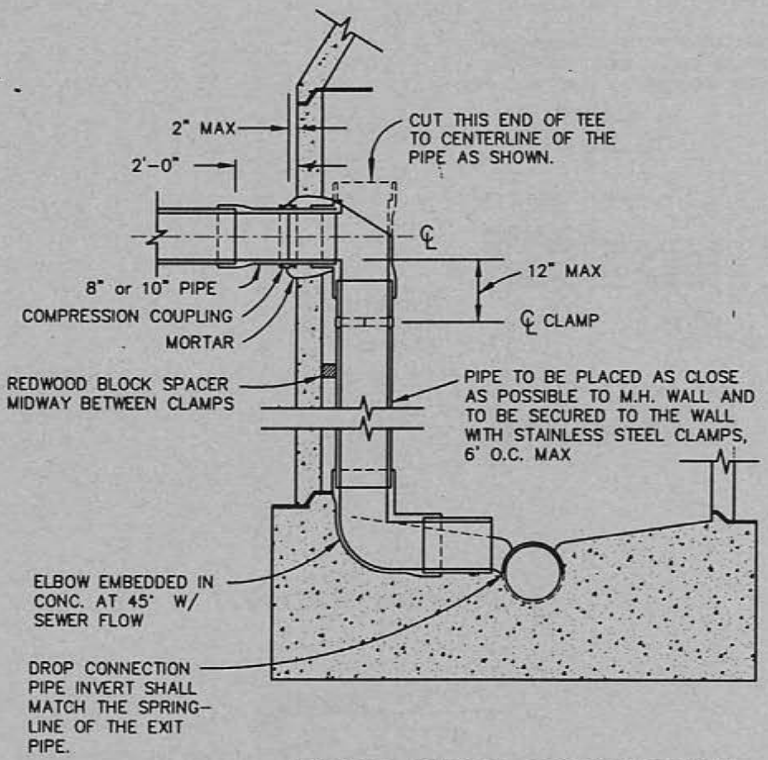

INSIDE DROP CONNECTION

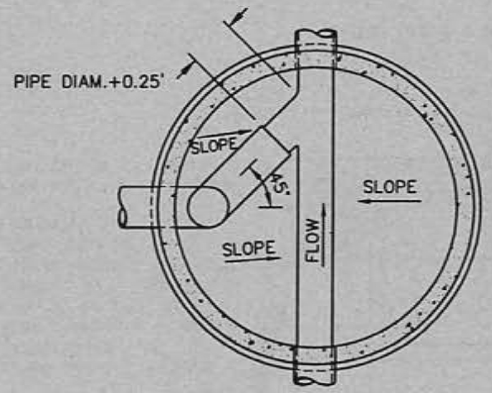

INSIDE DROP – PLAN

NOTES:

1. ALL INSIDE DROP PIPING TO BE A.B.S. OR PVC SDR-26.
2. CEMENT ALL JOINTS
3. DROP CONNECTION PIPE AND FITTINGS TO BE SAME SIZE AS ENTERING PIPE.
4. CLAMPS TO BE 1-1/2" X 12 GA STAINLESS STEEL, ANCHORED TO M.H. WALL WITH 2-1/2" CADMIUM PLATED BOLTS.

DIRECTOR

SACRAMENTO COUNTY
PUBLIC WORKS AGENCY

DROP CONNECTIONS

DRAWN BY: DAH
SCALE: NONE
DATE: 4/97

7-3

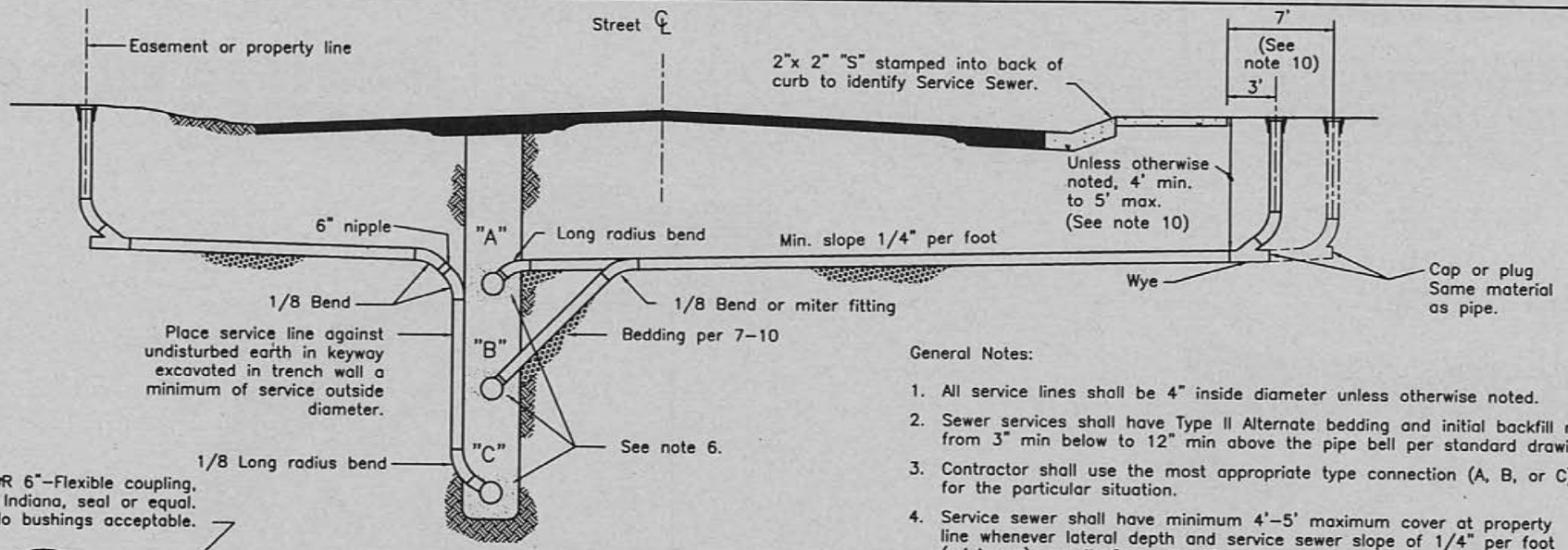

ELEVATIONS

ALTERNATE ABS SERVICE SEWER CONNECTION TO VCP OR PVC

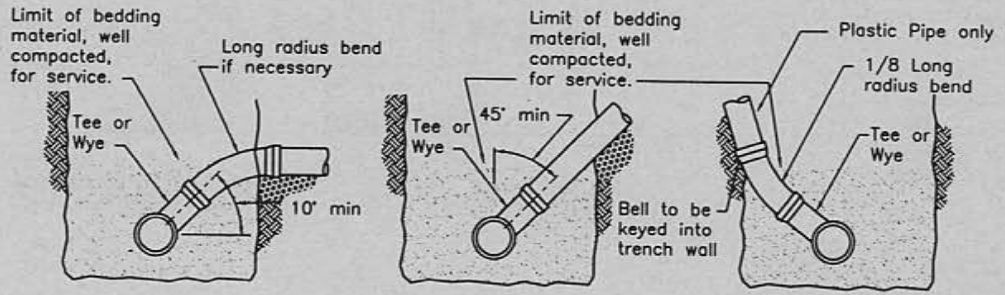

TYPE A TYPE B TYPE C

CONNECTION DETAILS

General Notes:

1. All service lines shall be 4" inside diameter unless otherwise noted.
2. Sewer services shall have Type II Alternate bedding and initial backfill material from 3" min below to 12" min above the pipe bell per standard drawing S-4.
3. Contractor shall use the most appropriate type connection (A, B, or C) for the particular situation.
4. Service sewer shall have minimum 4'-5' maximum cover at property line whenever lateral depth and service sewer slope of 1/4" per foot (minimum) permit. See note 10.
5. When the collector sewer depth is such that minimum cover at property line cannot be met, the minimum slope of 1/4" per foot shall govern the cover.
6. Place concrete 12" wide or well compacted bedding material 18" wide under the tee or wye, the fitting, and unsupported pipe. When bedding material is used, place additional bedding material to top of bend, the full width of the trench.
7. Minimum specified cover at the property line shall be measured from existing ground surface or edge of adjacent roadway, whichever is lower.
8. A specific elevation at the property line, when shown on the plans or designated by the engineer, shall govern.
9. Miter fittings shall be max. 45°.
10. Minimum depth of cover to be 5'-0" and maximum 6'-0" where water main is to be installed at back of sidewalk as part of the subdivision improvements. In such cases, service is to be extended to 7' back of sidewalk; cleanout to grade to remain 2' back of sidewalk and a second cleanout to be installed on end of extension.

Robert J. Shaw
DIRECTOR

SACRAMENTO COUNTY
PUBLIC WORKS AGENCY

SERVICE SEWERS

DRAWN BY: DAH
SCALE: NONE
DATE: 4/97

7-5

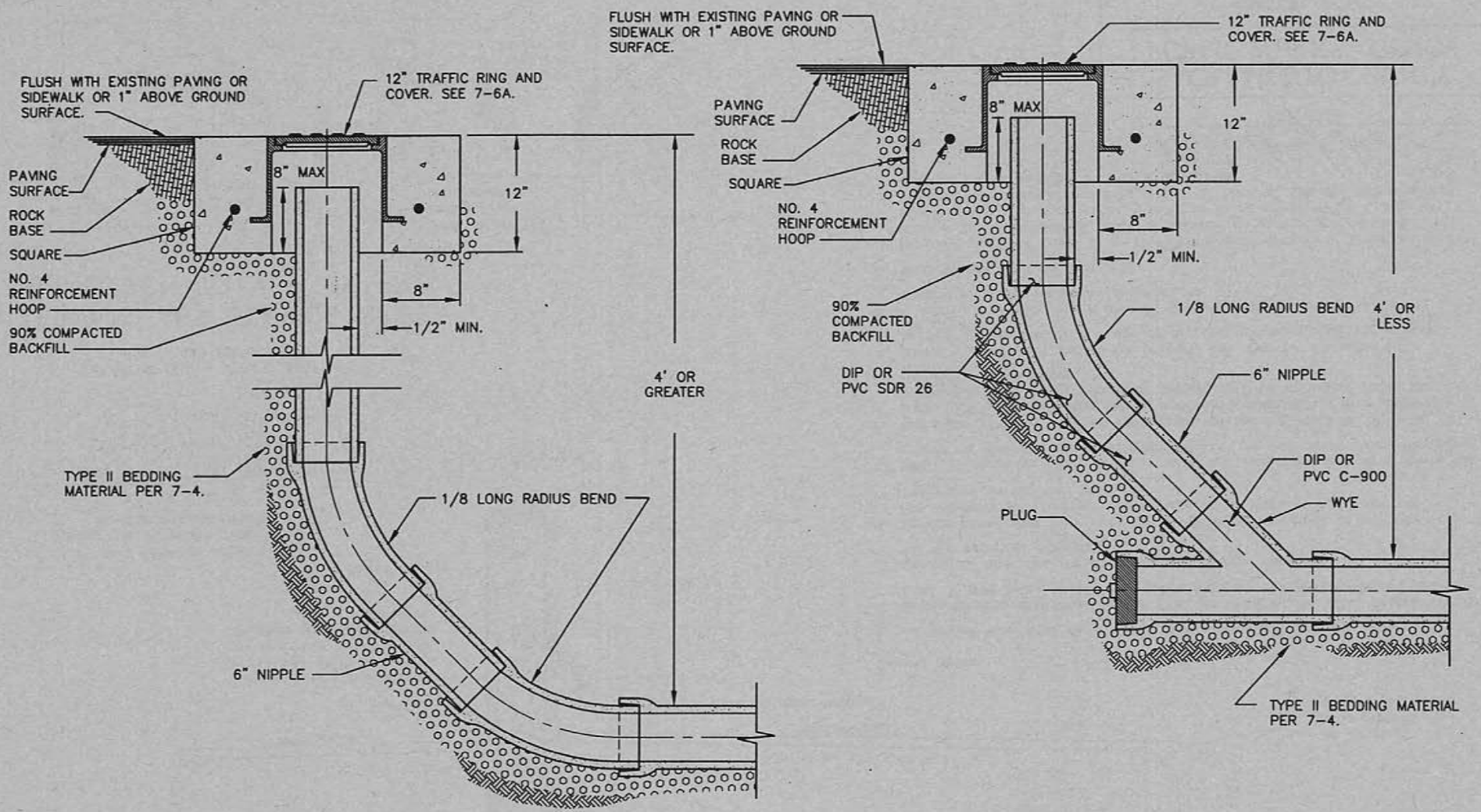

NOTE:

ALL PIPE FITTINGS SHALL BE THE SAME SIZE AND MATERIAL AS THE HORIZONTAL PIPE TO WHICH THEY CONNECT. JOINT SHALL BE AS SPECIFIED FOR THE TYPE OF PIPE USED.

Robert A. Ghirardi
DIRECTOR

SACRAMENTO COUNTY
PUBLIC WORKS AGENCY

FLUSHING BRANCH

DRAWN BY: DAH
SCALE: NONE
DATE: 4/97

7-6

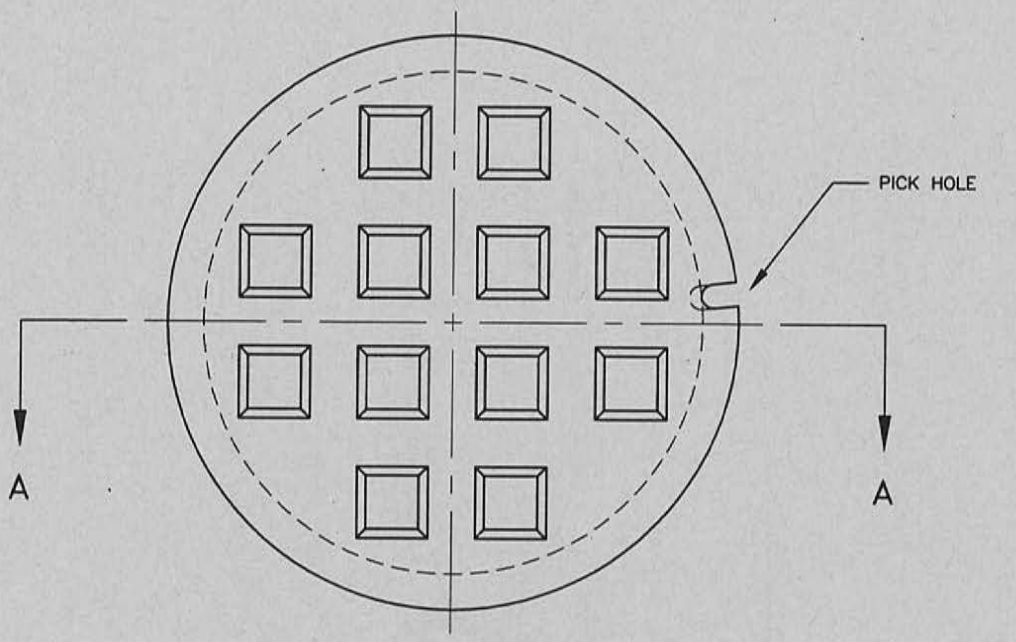

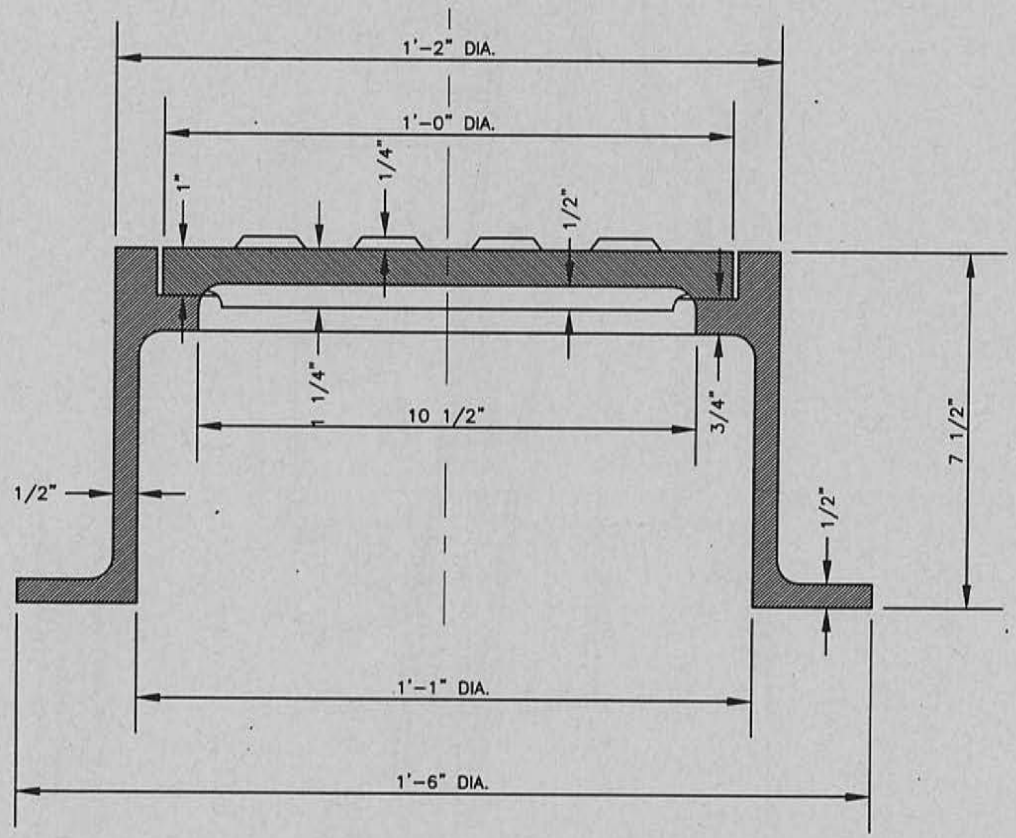

SECTION A-A

Robert J. Shaw
DIRECTOR

SACRAMENTO COUNTY
PUBLIC WORKS AGENCY

STANDARD
FLUSHER BRANCH
FRAME AND COVER

DRAWN BY: DAH
SCALE: NONE
DATE: 4/97

7-6A

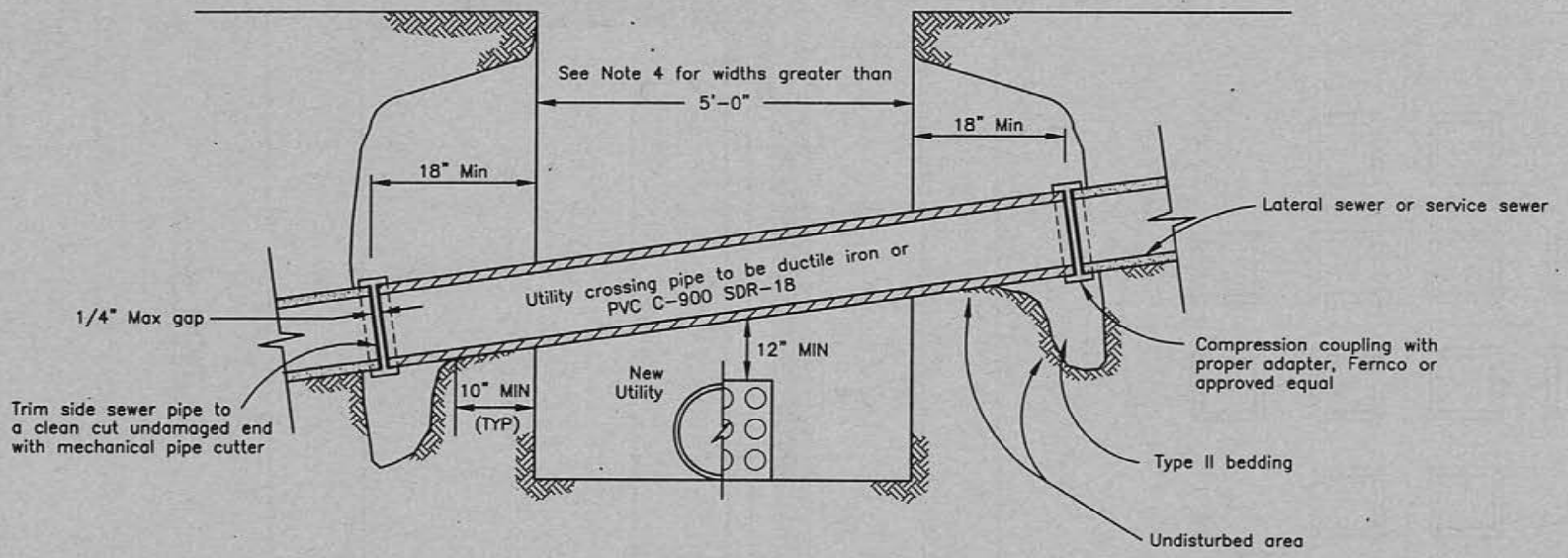

Notes:

1. All lines are to be protected in place. This detail shall apply whenever the main collector or lateral sewer service is cut or damaged when new construction passes beneath these lines, and may only be used when directed to do so by the county engineer.
2. Inside diameter of utility crossing pipe to be the same as the pipe to which it connects.
3. Alteration of sewer grades will be permitted only after written permission has been received from the Sacramento County Public Works Agency and shall comply with 7-13.
4. Whenever the span, whether caused by trench width or crossing angle of the utility crossing pipe exceeds 5'-0", place Type II Alternate bedding to 12" above the new utility and 18" each side of its center line.
5. Any new utility with 6" or less clearance shall place a compressable material (styrofoam or equivilent) between the lines.

Robert J. Shanks
DIRECTOR

SACRAMENTO COUNTY
PUBLIC WORKS AGENCY

UTILITY CROSSING

DRAWN BY: DAH
SCALE: NONE
DATE: 4/97

7-7

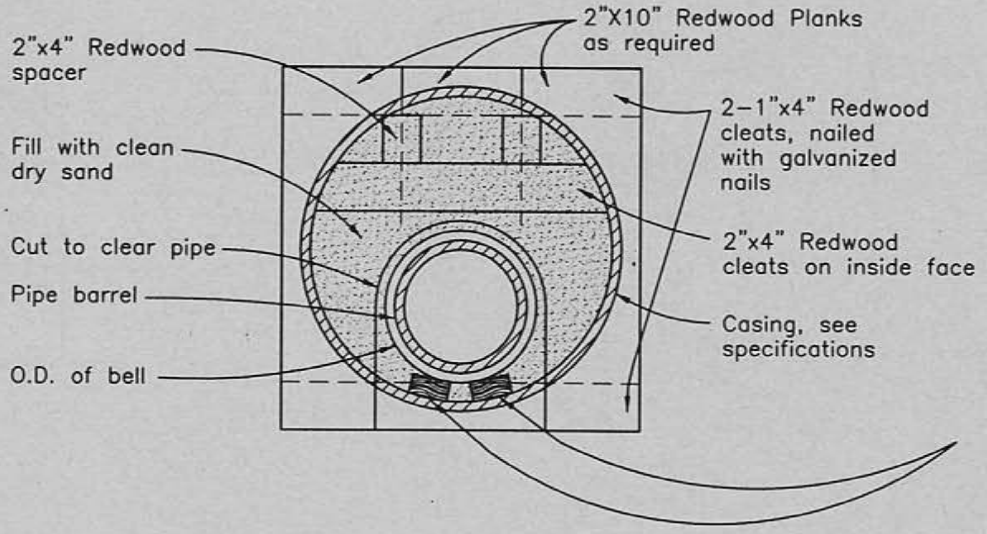

SECTION B–B

Note:

In lieu of 3–2" redwood planks, headwall may be of redwood plywood of thickness approved by the engineer.

Provide 2 redwood skids, 24 to 30 inches in length, near the center of each section of conducted V.C. sewer pipe Conducted water pipe shall have two pairs of skids, 24 to 30 inches in length from each end.
Skids to be of size such that bell clears conductor. Skid height not to be more than 50% of width. Skids are to be secured to pipe by straps, one at each end. Groove skids for strap clearance.

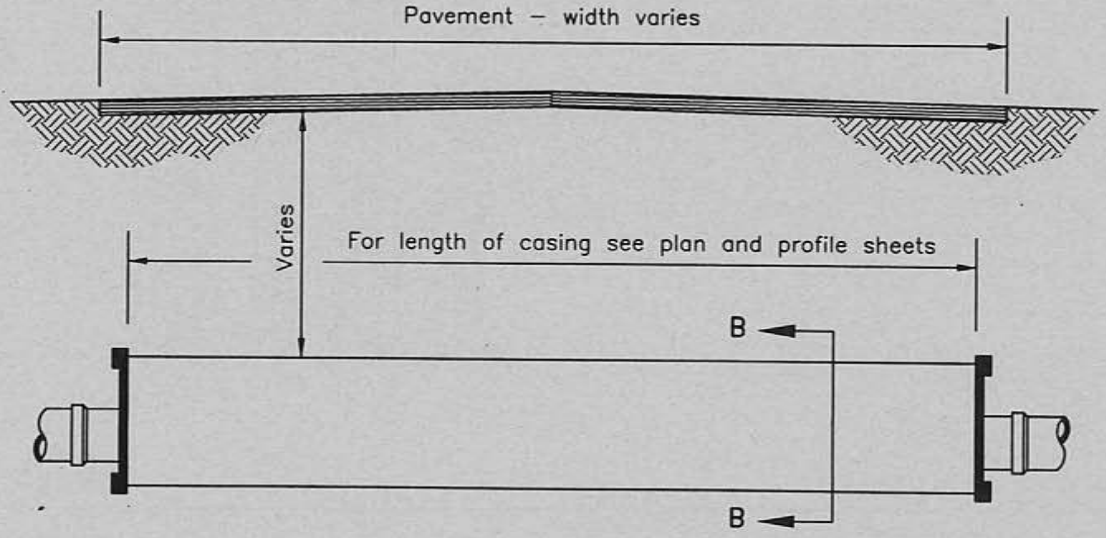

PROFILE

Robert J. Shenk
DIRECTOR

SACRAMENTO COUNTY
PUBLIC WORKS AGENCY

CONDUCTOR CASING DETAIL

DRAWN BY: DAH
SCALE: NONE
DATE: 4/97

7-8

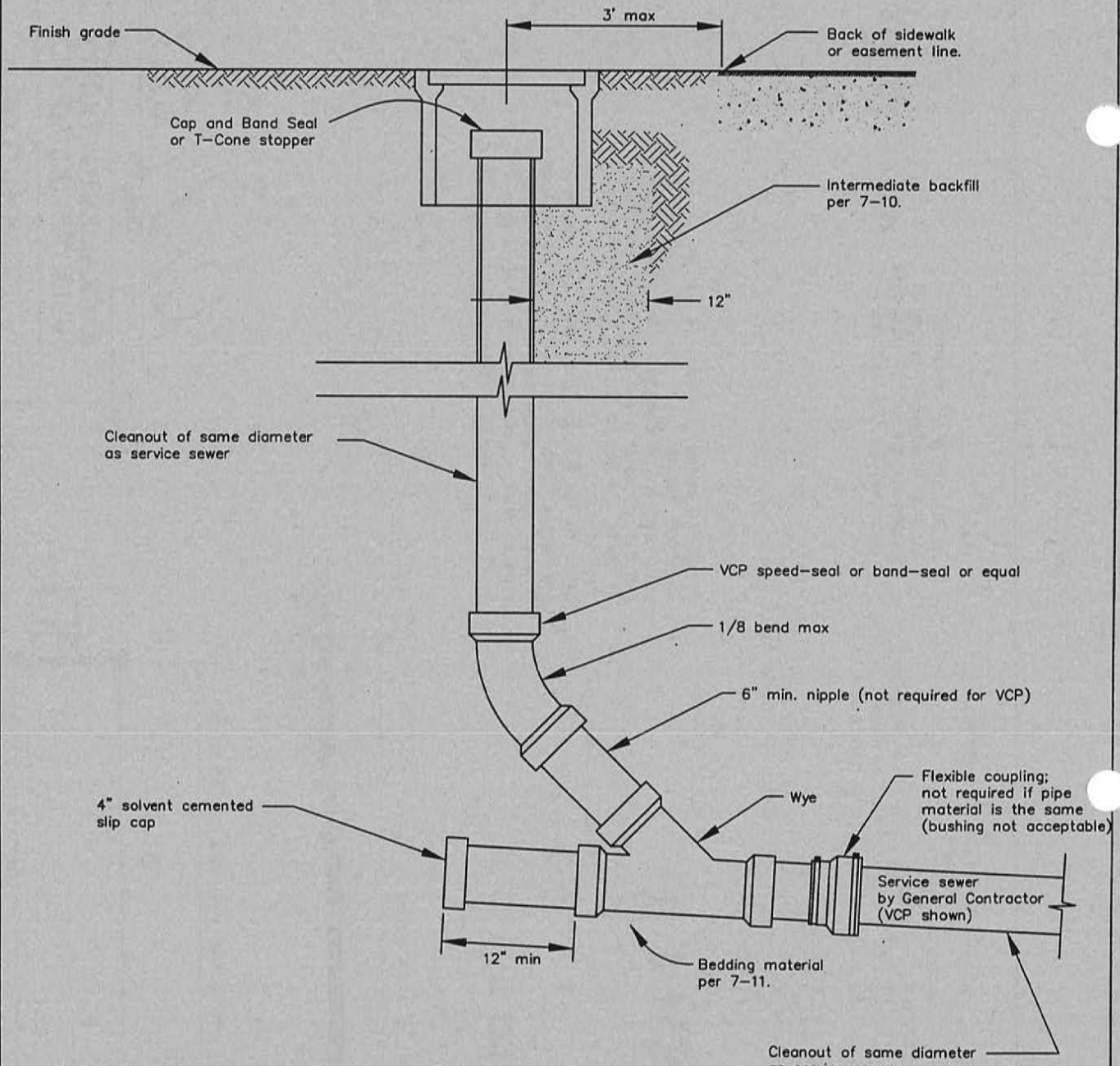

1. Cleanout to grade to be VCP or plastic DWV type PVC (ASTM D2665) or ABS (ASTM D2661) with solvent weld joints.
2. For 4" services in non–travel ways, install round non–traffic type concrete or PVC valve box and cover marked "Sewer". Box inside diameter to be a minimum of 7" and a maximum of 10".
3. For services 4" and 6" or larger in concrete or travel ways, install round concrete traffic type valve box with cast iron cover. Cover to be marked "Sewer".
4. If a water main is to be installed at the back of sidewalk, extend service to 7' back of sidewalk; cleanout to grade to remain 1' to 3' from back of sidewalk and a second cleanout to be installed on the end of the extension 7' back of sidewalk.

Robert D. Shaw
DIRECTOR

SACRAMENTO COUNTY
PUBLIC WORKS AGENCY

VCP, ABS or PVC
CLEANOUT TO GRADE

DRAWN BY: DAH
SCALE: NONE
DATE: 4/97

7-9

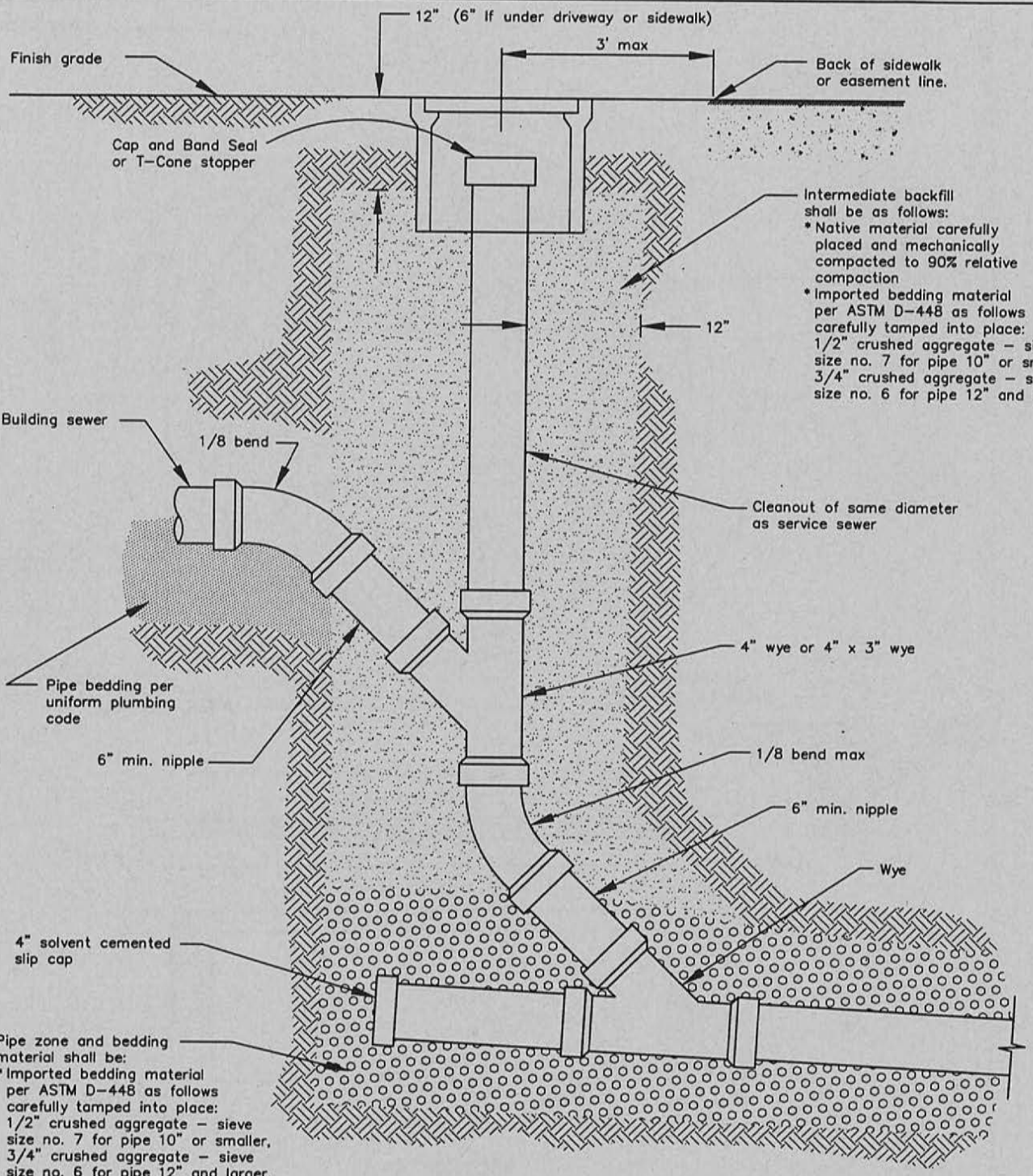

WATER QUALITY DIVISION BEDDING REQUIREMENT FOR BUILDING SEWER CONNECTION

Place a minimum of 12" of backfill all around the outside diameter of the riser and mechanically compacted to 90% relative density. Backfill material material shall be used to 12" from grade except under concrete.

Robert J. Shaw

DIRECTOR

SACRAMENTO COUNTY
PUBLIC WORKS AGENCY

MODIFIED VCP, ABS or PVC CLEANOUT TO GRADE

BUILDING SEWER CONNECTED TO RISER

(Not applicable when the water main is located behind the sidewalk.)

DRAWN BY: DAH SCALE: NONE DATE: 4/97	**7-10**

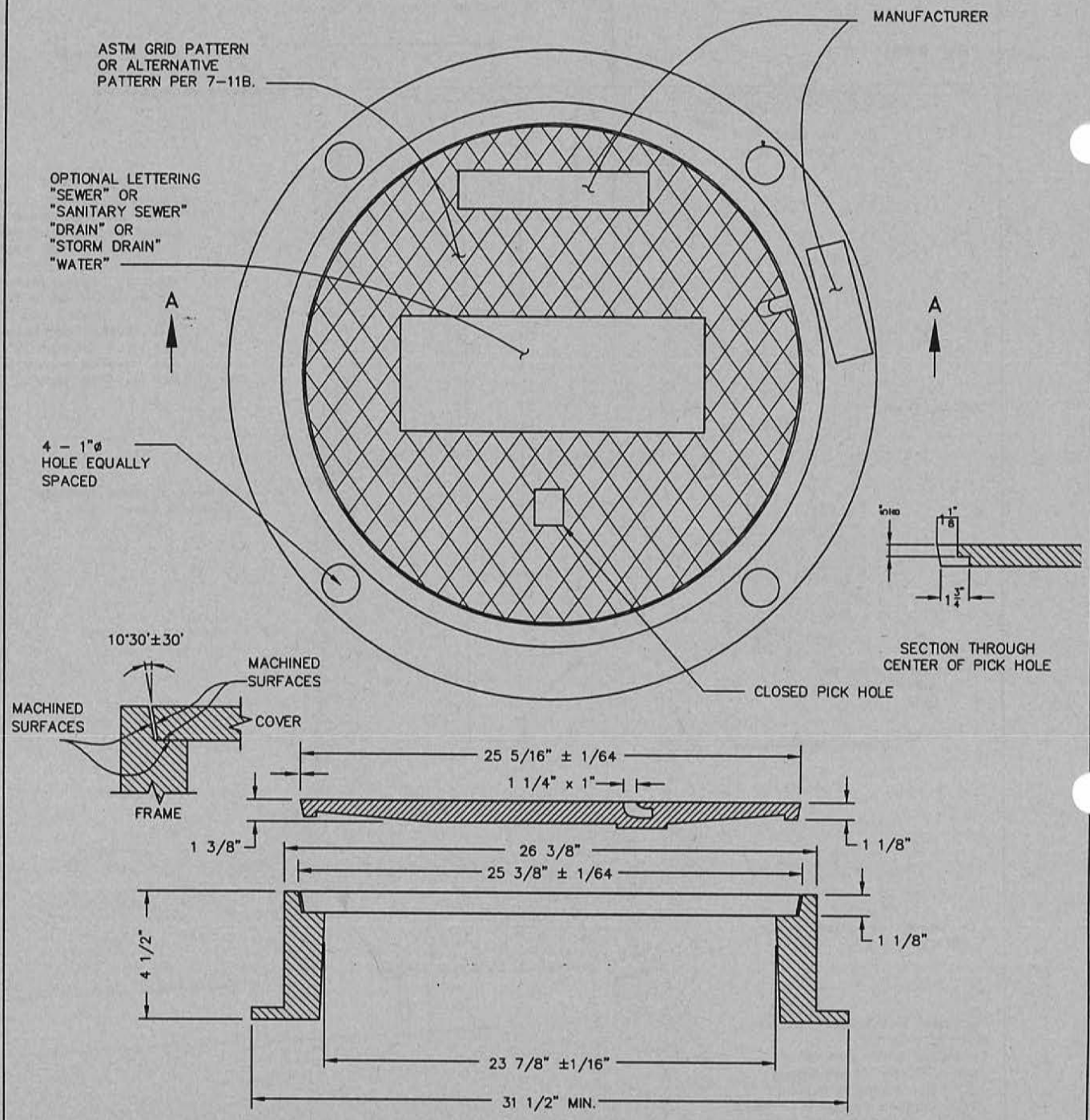

SECTION A–A

NOTES:

1. ALL CASTINGS TO CONFORM TO ASTM A48, CLASS 30
2. FRAME AND COVER TO MEET H–20 LOAD SPECIFICATIONS.
3. MACHINED HORIZONTAL AND VERTICAL BEARING SURFACES NOT TO EXCEDE 1/64" TOLERANCE.
4. FRAME AND COVER SHALL HAVE A COATING OF BITUMINOUS MATERIAL.
5. EQUIVALENT DUCTILE IRON FRAME AND COVERS MAY BE USED. SEE 11A.
6. LOCKING COVER TYPE FRAME AND COVERS SHALL BE USED IN EASEMENT AREAS UNLESS OTHERWISE APPROVED.

ITEM	APPROX. WT. (LBS)
ASSEMBLY	270 ± 15
FRAME	140 ± 10
COVER	130 ± 5

Robert A. Ghirardi
DIRECTOR

SACRAMENTO COUNTY
PUBLIC WORKS AGENCY

GREY IRON STANDARD MANHOLE FRAME & COVER

DRAWN BY: DAH
SCALE: NONE
DATE: 4/97

7-11

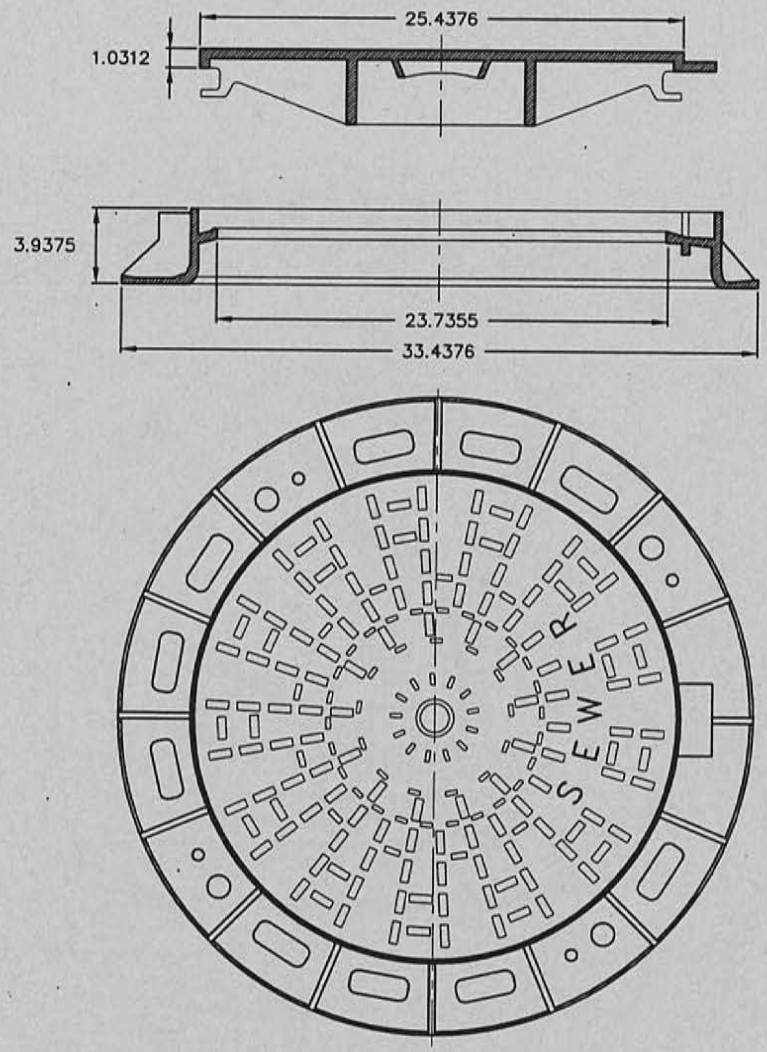

DUCTILE IRON CASTINGS

1. Manhole frame and cover shall be manufactured using spheroidal or nodular graphite iron (ductile iron) complying with the requirements specified in ASTM A536–80.
2. All castings shall meet or exceed the H–20 load requirement.
3. All castings will be supplied with a coating of bituminous material and be free from cracks, holes, foreign inclusions, scale, lumps, blisters, sandholes, and other injurious defects.
4. The frame shall have a minimum of four bolt holes to anchor to the manhole casting.
5. The frame shall be designed to accept leveling inserts that will allow raising of the cover without excavation. The leveling inserts shall be locked into place using cadmium–plated steel bolts.
6. An anti–theft locking key shall be installed. The bolt shall be stainless steel with a pentagon head design measuring 7/8" point to flat.
7. The frame and cover shall be Model GTS Class 400 manufactured by PAM/LBI, Long Beach, California, 800 628–1093 or equal.

LEVELING INSERT

1. Two heights of locked leveling inserts can be used to raise the level of the cover without removing the frame.
2. Inserts shall be locked on the frame with two cadmium–plated steel bolts.
3. Inserts shall be made from ductile iron and fitted with a polyethylene sound dampening ring.
4. Cover shall be locked and locked into the insert in the same manner as in the original frame.
5. Several inserts can be used on the same manhole to get required height (not to exceed maximum throat heights per 7–1).
6. Leveling inserts shall be reference no. RE85R7MD or RE85R7ND or equal.

Robert K. Shaw

DIRECTOR

SACRAMENTO COUNTY
PUBLIC WORKS AGENCY

DUCTILE IRON FRAME & COVER

DRAWN BY: DAH
SCALE: NONE
DATE: 3/98

7-11A

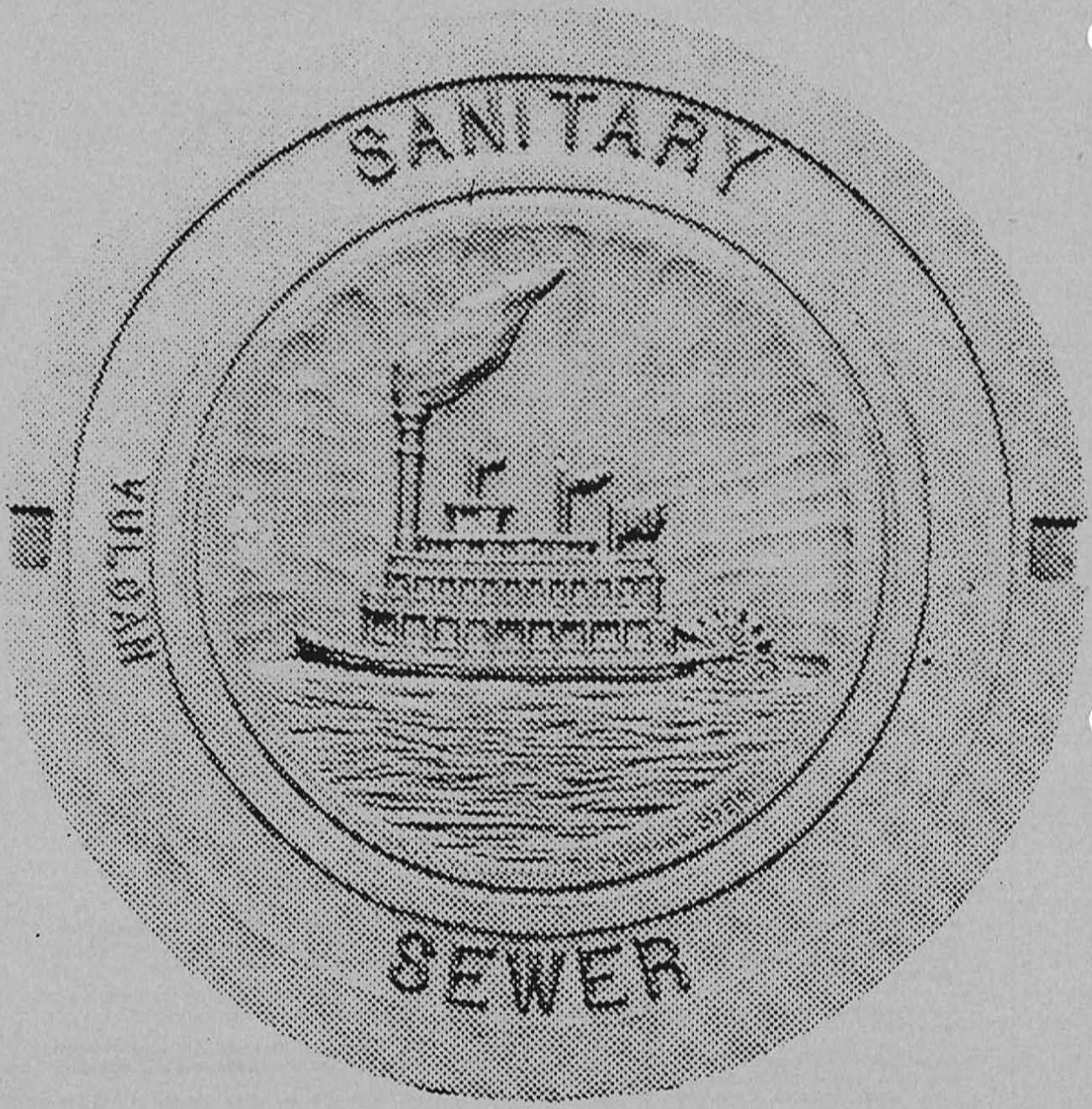

NOTES:

1. ALTERNATIVE MANHOLE COVER PATTERNS ARE SUBJECT TO APPROVAL OF THE DIRECTOR ON A CASE BY CASE BASIS ONLY.
2. ALL GENERAL REQUIREMENTS FOR THE FRAME AND COVER SPECIFIED ON 7-11 SHALL APPLY.

Robert F. Shank
DIRECTOR

SACRAMENTO COUNTY
PUBLIC WORKS AGENCY

ALTERNATE MANHOLE COVER

DRAWN BY: DAH
SCALE: NONE
DATE: 4/97

7-11B

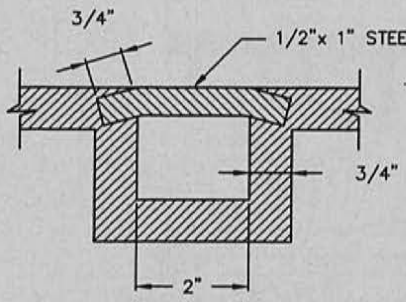

SECTION B–B

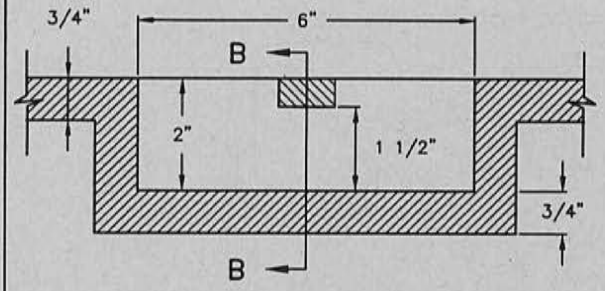

SECTION A–A

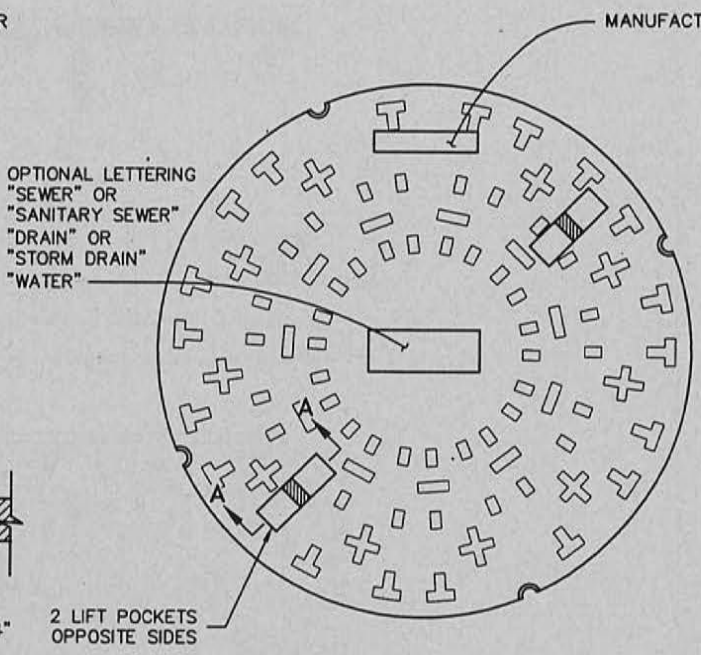

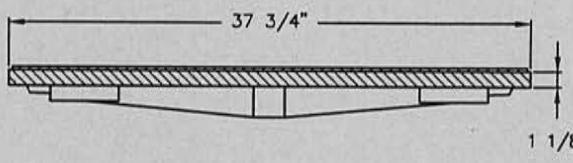

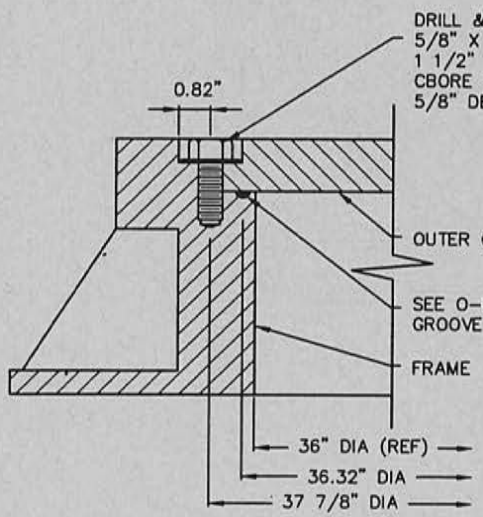

BOLT DOWN COVER DETAIL

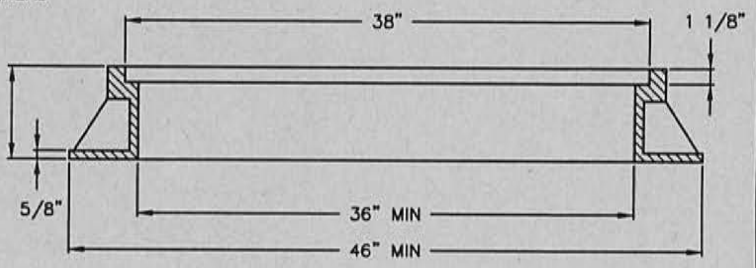

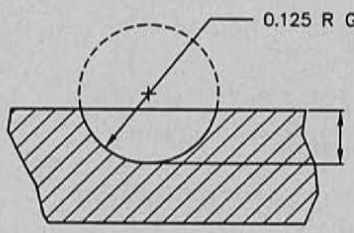

O–RING GROOVE DETAIL

ITEM	APPROX. WT. (LBS)
FRAME	310 ± 5%
COVER	310 ± 5%

NOTES:

1. ALL CASTINGS TO CONFORM TO ASTM A48, CLASS 30.
2. FRAME AND COVER TO MEET H–20 LOAD SPECIFICATIONS.
3. MACHINED HORIZONTAL AND VERTICAL BEARING SURFACES NOT TO EXCEED 1/64" TOLERANCE.
4. FRAME AND COVER SHALL HAVE A COATING OF BITUMINOUS MATERIAL.
5. EQUIVALENT DUCTILE IRON FRAME AND COVERS MAY BE USED ONLY WHEN SPECIFIED, SEE 12A.
6. 5/8" x 20 UNC THREAD, 316 STAINLESS STEEL SOCKET HEAD CAP SCREW AND 1 1/2" O.D. X 1 1/16" I.D. X 0.078 THICK 316 STAINLESS STEEL WASHER.
7. 1/4" NEOPRENE O–RING GASKET SHALL BE GLUED INTO MACHINED GROOVE. GLUE SHALL MEET THE REQUIREMENTS OF MIL–M–81288 (AMEND. 1)

Robert D. Shaw
DIRECTOR

SACRAMENTO COUNTY
PUBLIC WORKS AGENCY

GREY IRON
STANDARD 36" MANHOLE FRAME & COVER

DRAWN BY: DAH
SCALE: NONE
DATE: 9/98

7-12

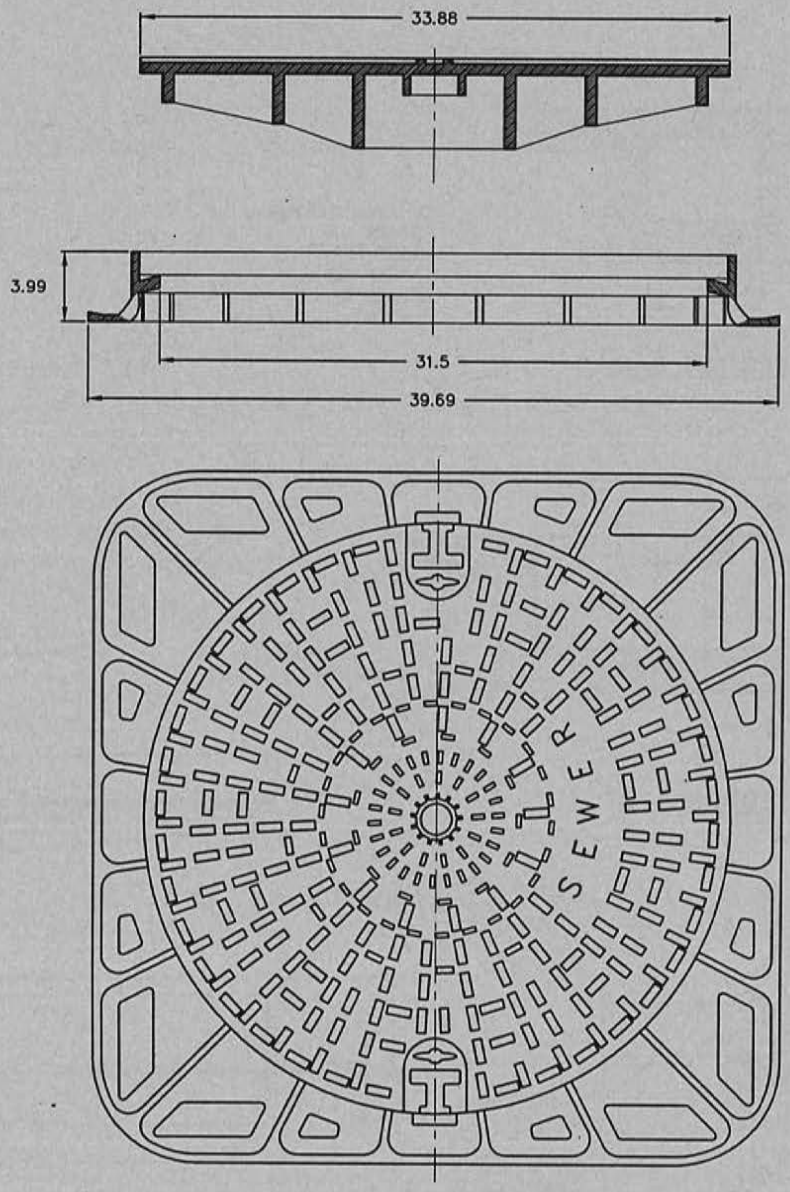

DUCTILE IRON CASTINGS

1. Manhole frame and cover shall be manufactured using spheroidal or nodular graphite iron (ductile iron) complying with the requirements specified in ASTM A536–80.

2. All castings shall meet or exceed the H–20 load requirement.

3. All castings will be supplied with a coating of bituminous material and be free from cracks, holes, foreign inclusions, scale, lumps, blisters, sandholes, and other injurious defects.

4. Two anti–theft locking keys shall be installed. The bolts shall be stainless steel with a pentagon head design measuring 7/8" point to flat.

5. The frame and cover shall be Model PARIS–S Class D 400 manufactured by PAM/LBI, Long Beach, California, 800 628–1093 or equal.

6. Lifting key shall be supplied. Model reference RE 80 R 8L, Mass 1.54 lbs.

Robert J. Shanks
DIRECTOR

SACRAMENTO COUNTY
PUBLIC WORKS AGENCY

DUCTILE IRON FRAME & COVER

DRAWN BY: DAH
SCALE: NONE
DATE: 3/98

7-12A

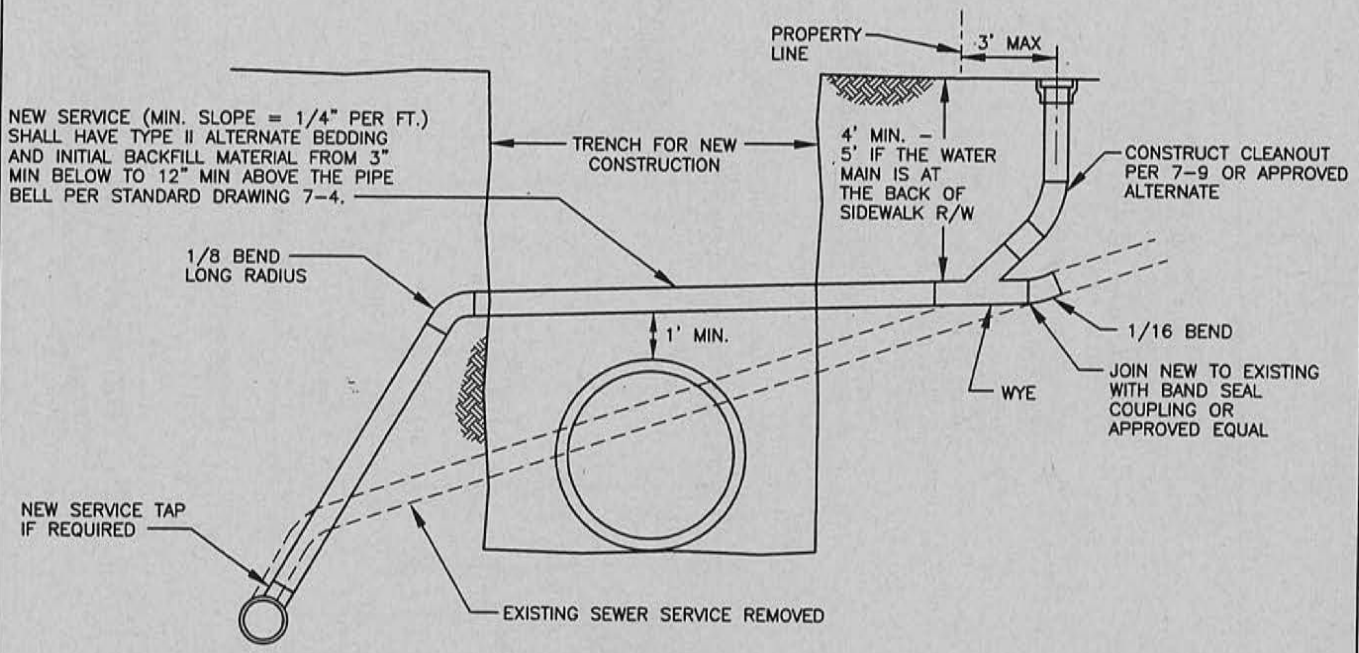

SEWER SERVICE RELOCATION OPTION OVER NEW CONSTRUCTION

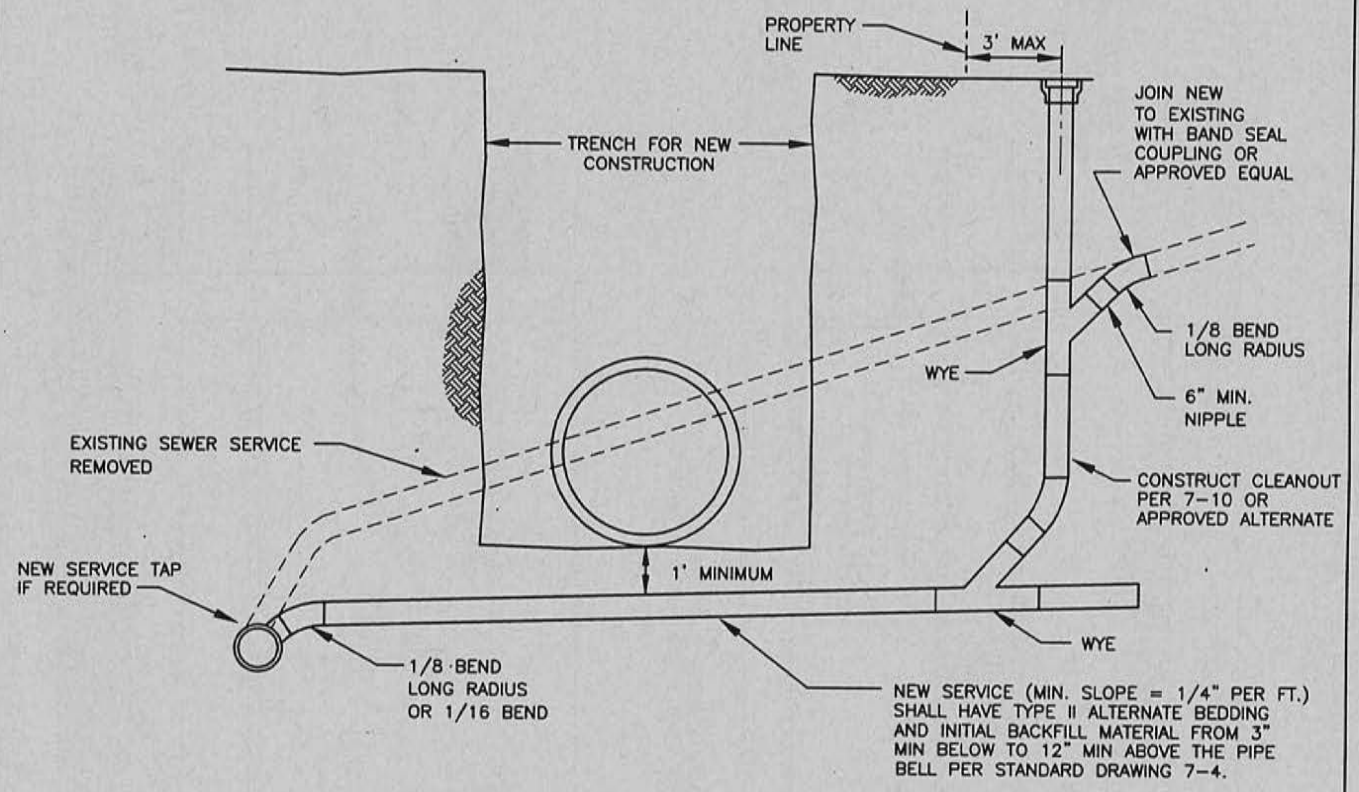

SEWER SERVICE RELOCATION OPTION UNDER NEW CONSTRUCTION

NOTE:

IF NEITHER OF THESE OPTIONS IS AVAILABLE, THE ELEVATION OF THE NEW FACILITY WILL NEED TO BE ADJUSTED TO ACCOMMODATE ONE OF THESE OPTIONS.

Robert J. Shaw

DIRECTOR

SACRAMENTO COUNTY
PUBLIC WORKS AGENCY

SEWER SERVICE REPLACEMENT

DRAWN BY: DAH
SCALE: NONE
DATE: 4/97

7-13

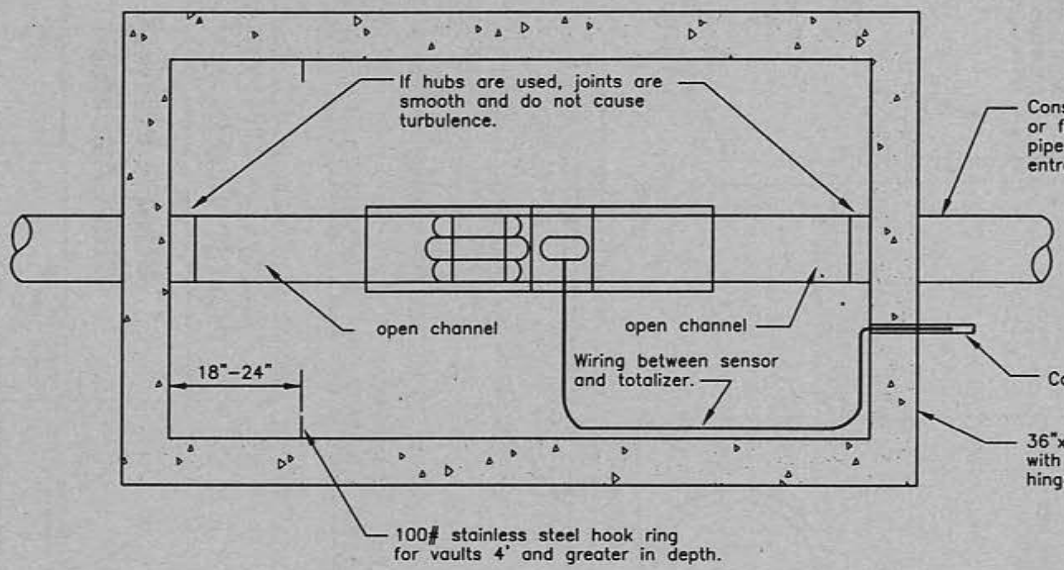

Notes:

1. Locate vault as close as practical to the source structure. If located in a parking lot, the vault is to be protected from traffic with steel posts or installed flush with traffic rated H–20 or better lid marked "No Parking".
2. Vault size to be increased for 10" and above pipes.
3. If flow paced sampling, a cable for District use (to also do flow paced sampling) shall be provided. Connectors should be protected from enviroment if necessary (caps for preventing corrosion).
4. Installation inspection shall be performed by Water Quality Industrial Waste Section.

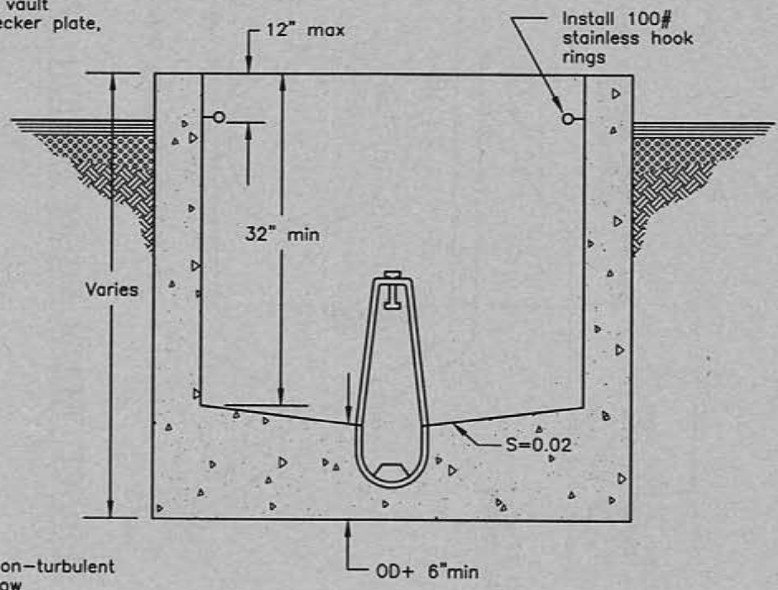

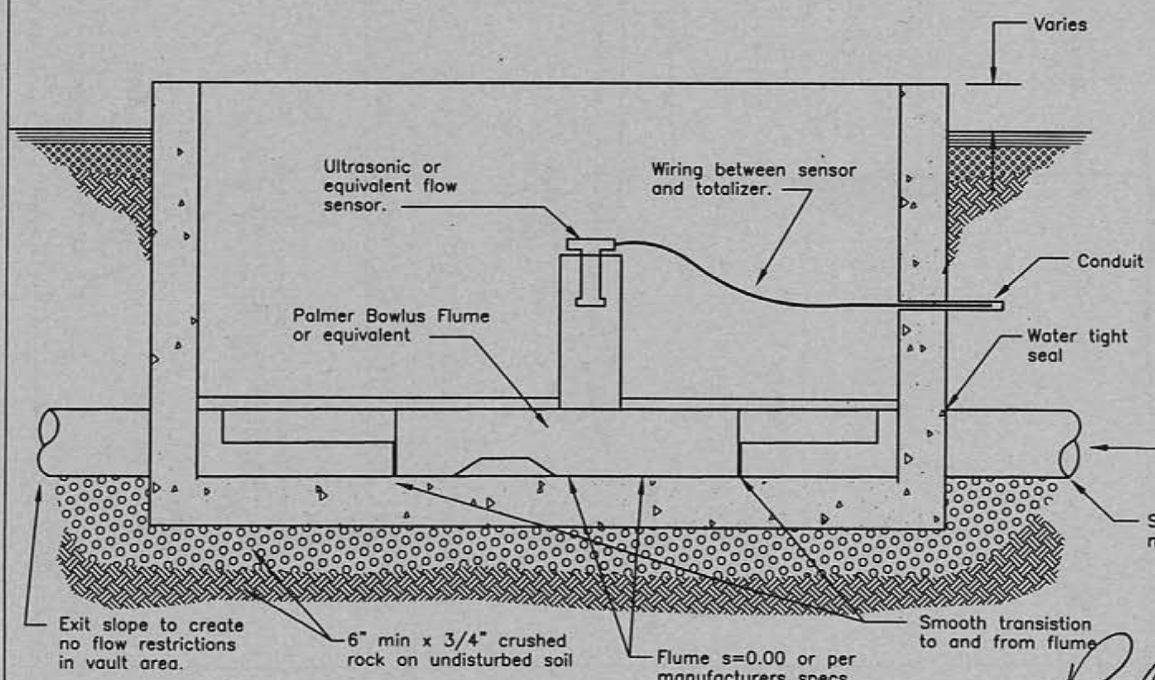

Robert J. Shaw
DIRECTOR

SACRAMENTO COUNTY
PUBLIC WORKS AGENCY

SAMPLING VAULT

DRAWN BY: DAH
SCALE: NONE
DATE: 7/97

7-14

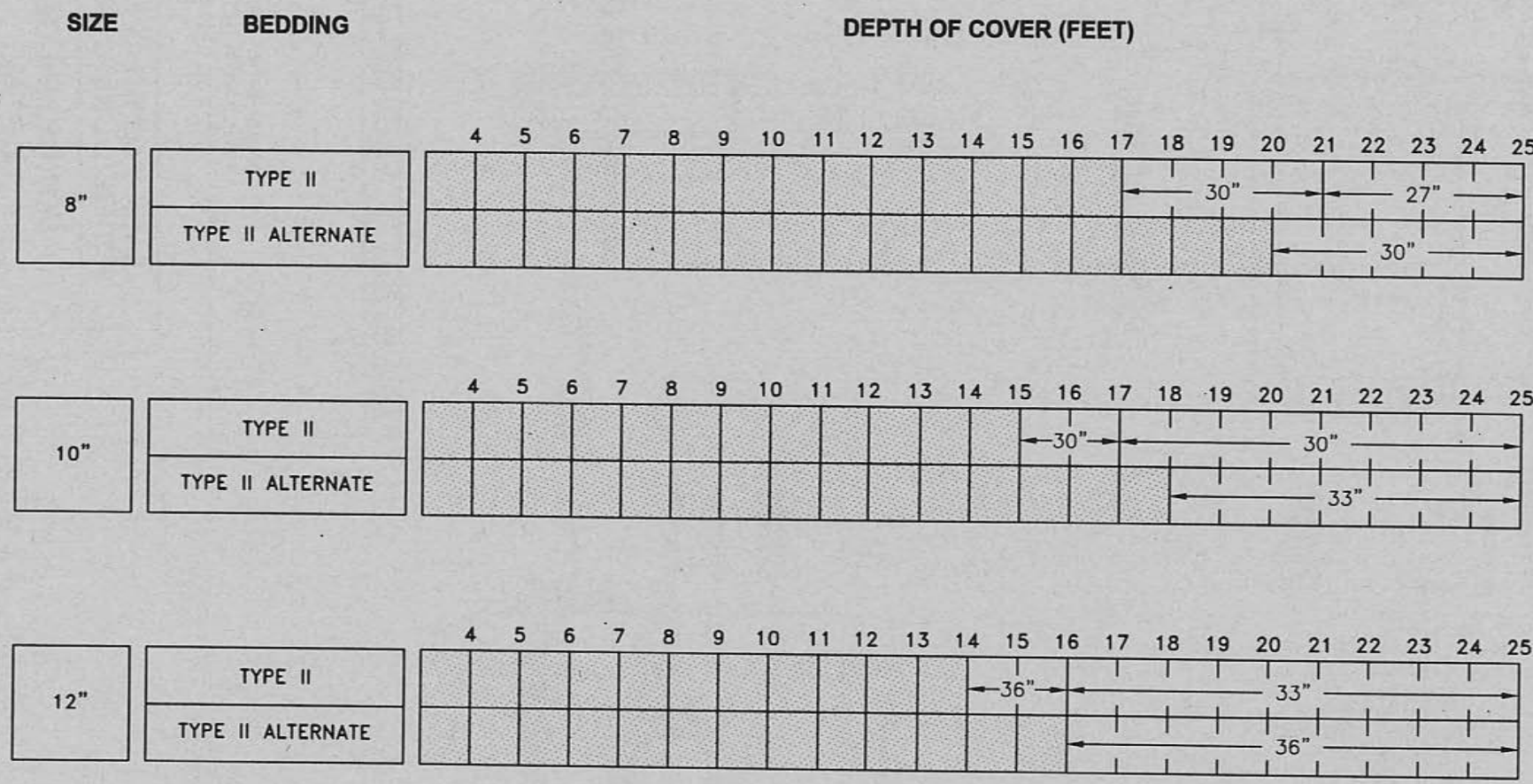

No limit on trench width

30" Maximum trench width measured at the top of the pipe.

Note:
Calculations based in soil WT.= 120 lb/ft^3
saturated clay (Ku'= 0.110)

DIRECTOR

SACRAMENTO COUNTY
PUBLIC WORKS AGENCY

MAXIMUM TRENCH WIDTH FOR EXTRA STRENGTH VITRIFIED CLAY PIPE

DRAWN BY: DAH
SCALE: NONE
DATE: 3/98

7-15

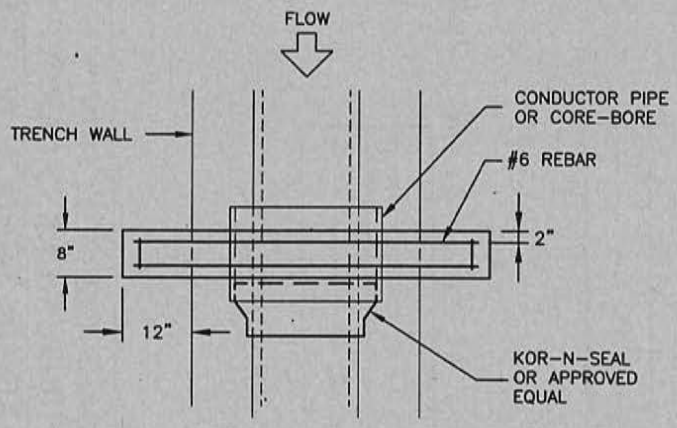

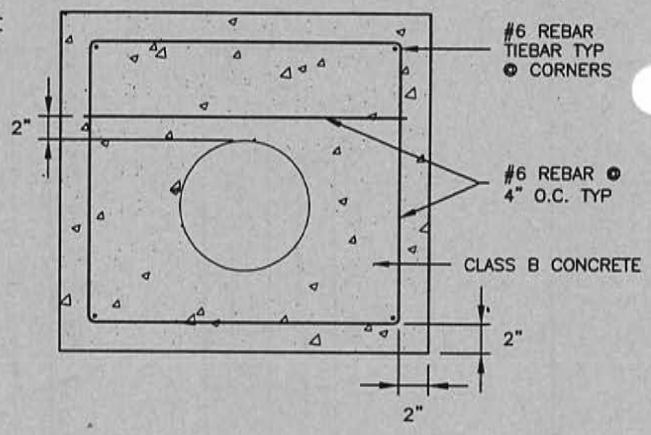

REBAR DETAIL

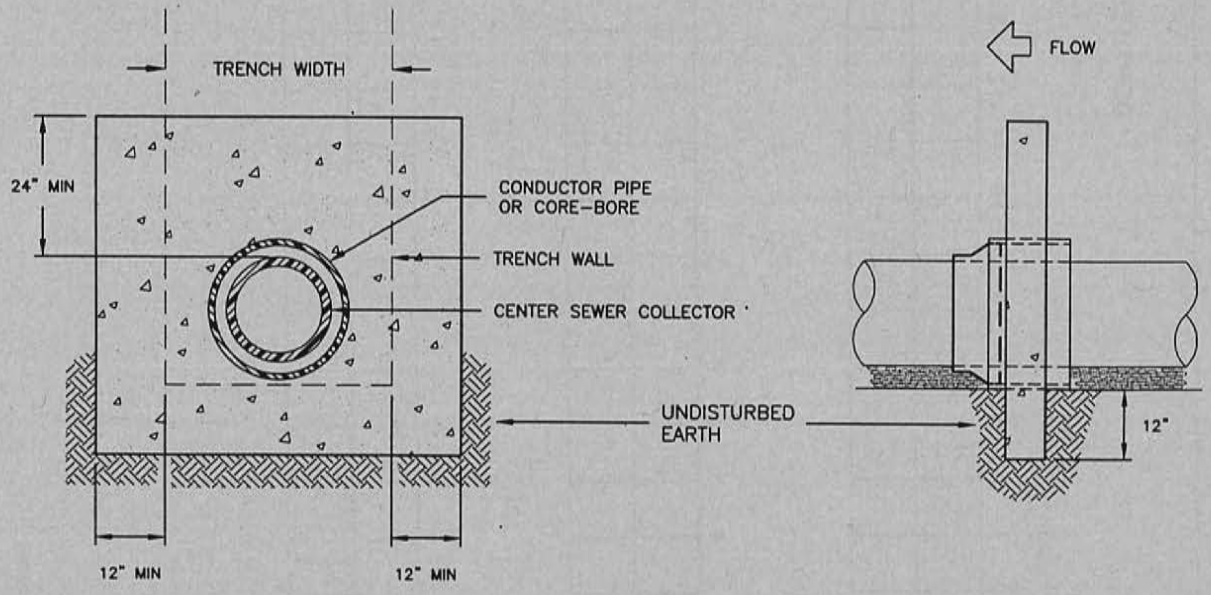

COLLECTOR SIZE	CONDUCTOR PIPE SIZE
8"	12" VCP
10"	15" PVC SDR 26
12" TO 21"	CORE-BORE THE APPROPRIATE SIZE HOLE IN THE DAM

NOTES:

1. TOP OF DAM TO EXTEND INTO INTERMEDIATE BACKFILL 12" MINIMUM OR TOP OF GROUND WATER HGL.

Robert J. Shaw
DIRECTOR

SACRAMENTO COUNTY
PUBLIC WORKS AGENCY

CONCRETE DAM DETAIL

DRAWN BY: DAH
SCALE: NONE
DATE: 8/98

7-16

SECTION 8

WATER SUPPLY SYSTEMS

Table of Contents

8-1 INTRODUCTION 2
8-2 INTENT OF WATER SYSTEM IMPROVEMENT STANDARDS 2
8-3 DEFINITIONS 2
8-4 APPLICABLE STANDARDS 2
8-5 IMPROVEMENT PLAN SUBMITTAL 3
8-6 APPROVAL OF IMPROVEMENT PLANS 3
8-7 IMPROVEMENT PLAN REVISION 4
8-8 CONNECTION PERMITS AND FEES 4
8-9 WATER SUPPLY QUALITY 4
8-10 WATER SUPPLY PRESSURE 4
8-11 WATER DEMAND 4
8-12 FIRE FLOWS 4
8-13 WELLS, TREATMENT PLANT AND STORAGE FACILITY DESIGN 4
8-14 TRANSMISSION MAIN DESIGN 5
A. Transmission System Layout Requirement 5
B. Transmission Main Location 5
8-15 DISTRIBUTION MAIN DESIGN 6
A. Distribution Main Design Plan Requirements 6
B. Distribution Main Location 7
C. Distribution Main Layout and Sizing 8
D. Distribution Main Pipe Restraint 9
E. Type of Water Distribution Main Pipe and Pipe Deflection 9
8-16 WATER SYSTEM APPURTENANCES 9
A. Fire Hydrants and Blow-off Assemblies 9
B. Water Service Lines 10
C. Water Meters 11
D. Detector-Check Valves 11
E. Back-Flow Devices 11
F. Air Release/Vacuum Valve Assemblies 11
8-17 RECYCLED WATER AND NON-POTABLE WATER TRANSMISSION MAINS AND DISTRIBUTION MAINS 11
8-18 RECORD PLANS 12

DRAWINGS

8-1 INTRODUCTION

These improvement standards govern the design of all water systems intended for operation and maintenance by the County of Sacramento. The County of Sacramento provides retail water service through the Sacramento County Water Maintenance District, and wholesales water through zones of the Sacramento County Water Agency.

8-2 INTENT OF WATER SYSTEM IMPROVEMENT STANDARDS

The intent of these water system improvement standards is to provide water systems that reliably and safely conveys water at a reasonable capital cost and to provide water systems that minimize operation and maintenance costs.

8-3 DEFINITIONS

When the following terms or titles are used in these water system improvement standards, or in any document or instrument where these standards govern, the intent and meaning shall be as herein defined:

- **AWWA** – American Water Works Association.
- **LD & SIR** – Land Development and Site Improvement Review Section of the Building Inspection Division of the Department of County Engineering of the County of Sacramento's Public Works Agency.
- **Recycled Water** – Non-potable water for irrigation use only.
- **Water Agency** – Shall mean the Sacramento County Water Agency.
- **Water District** – Shall mean the Sacramento County Water Maintenance District.
- **Water Supply** – Shall mean the Planning and Development Section and Water Maintenance Section of the Water Resources Division of the Department of District Engineering of the County of Sacramento's Public Works Agency.
- **Water System** – Refers to potable, raw water, and recycled (reclaimed) water systems.

8-4 APPLICABLE STANDARDS

Pertinent, and the most current requirements of the following agencies and standards shall apply to design of water systems. In case of conflict between the requirements of these water system improvement standards and the agencies and documents listed below, these improvement standards shall govern. Upon request, Water Supply will advise where these standards may be obtained:

- Environmental Protection Agency Drinking Water Regulations.

- Laws, codes, and Standards of the State of California, Department of Health Services relating to Domestic Water Supply.
- The County of Sacramento Public Works Agency Nonpotable (Recycled) Water Specifications.
- Standard Construction Specifications of the County of Sacramento, Department of Public Works.
- General Order No. 103 of the California Public Utilities Commission.
- Title 17, Chapter V, Sections 7583-7622, California Administrative Code, and County Ordinance No. 676 regarding cross-connections and backflow prevention.
- Uniform Fire Code.
- Ordinance No. 18 of the Sacramento County Water Agency where applicable within zones of the Water Agency.

8-5 IMPROVEMENT PLAN SUBMITTAL

Improvement plans for developments that will be served retail water by the Water District or wholesale water by the Water Agency shall be reviewed by Water Supply. Improvement plans shall meet the requirements of Section 2 – *General Requirements*, of these Improvement Standards. The initial submittal of improvement plans shall be made to LD & SIR in accordance with Section 2-5 *Initial Plan Submittal Requirements*, of these Improvement Standards. Of the sets submitted to LD & SIR, LD & SIR will route two (2) sets to Water Supply.

If improvement plans for commercial, industrial, or apartment developments, or street improvements will have landscaping, two complete sets of landscape plans must be sent to Water Agency for their review and approval. Any landscape project such as a park, or landscape corridor that will be served water by the Water District or wholesaled water by the Water Agency shall have landscape plans reviewed and approved by Water Supply.

Commercial, Industrial, or Apartment developments must also submit a completed Cross Connection Control Questionnaire to Water Supply.

8-6 APPROVAL OF IMPROVEMENT PLANS

All improvement plans and landscape plans to be served by the Water District or the Water Agency must be approved and signed by an authorized representative of the Water Agency or Water District. The following must occur before the plans can be approved:

- All comments made by Water Supply to the improvement plans must be addressed.
- The Fire Department must approve and sign the improvement plans.
- The location of all wells in use and all abandoned wells must be shown on the improvement plans, and properly destroyed in accordance with the requirements of the Sacramento County Environmental Management Department. Copies of well destruction permits for all destroyed wells must be provided to Water Supply before obtaining plan approval from Water Supply.
- If the project is within Zone 40 of the Water Agency, initial Zone 40 Water Development Fees must be paid. Initial development fees shall be in accordance

with Schedule A of Ordinance No. 18 of the Sacramento County Water Agency and are to be paid at LD & SIR.

Five sets of improvement plans and three sets of landscape plans shall be delivered directly to Water Supply after all approvals have been obtained and prior to beginning of construction.

8-7 IMPROVEMENT PLAN REVISION

All plan revisions that affect a water system to be maintained and operated by the Water District shall be approved and signed by an authorized representative of Water Supply prior to being approved by LD & SIR.

8-8 CONNECTION PERMITS AND FEES

A water connection permit shall be obtained for each connection to the water system. Contact Water Supply for information concerning Water Agency and Water District fees.

8-9 WATER SUPPLY QUALITY

The quality of the potable water supplied by the Water Agency will conform to the Environmental Protection Agency Drinking Water Act, and the State Department of Health Services Drinking Water Standards.

8-10 WATER SUPPLY PRESSURE

Water distribution systems shall be designed so that normal operating pressures at service connections to the distribution system are no less than 35 pounds per square inch (psi) and no more than 100 psi. During periods of maximum day domestic demand plus fire demand, the pressure shall not be less than 20 psi at the location of the fire flow and no less than 5 psi anywhere in the distribution system.

8-11 WATER DEMAND

For the design of water distribution systems serving single family residential areas, assume the water demand is one gallon per minute per residential connection (maximum day demand) plus fire flow. For the design of water distribution systems serving commercial areas, water demand shall be determined in consultation with the Water Agency. Water Supply may require that some distribution mains be upsized in accordance with approved Water Agency or Water District Master Water Supply Plans.

8-12 FIRE FLOWS

Required fire flows shall be determined by the Uniform Fire Code, the fire protection district having jurisdiction, and the County of Sacramento. The minimum fire flow for single family residential water systems is 1,500 gpm. The minimum fire flow for commercial/industrial water systems is 3,000 gpm.

8-13 WELLS, TREATMENT PLANT AND STORAGE FACILITY DESIGN

Water Supply will either design or provide design oversight of wells, treatment plants, booster pumping plants, and storage facilities.

In general, all developments must have a minimum of two (2) sources of water. If adequate elevated or ground level storage is provided, a single source of water system may be acceptable upon approval by Water Supply and the local fire district.

Site selection for the above mentioned facilities shall be approved by Water Supply and meet the requirements of the Environmental Health Division of the County Environmental Management Department, and the State Department of Health Services.

8-14 TRANSMISSION MAIN DESIGN

Sizing of transmission mains shall conform to Master Water Supply Plans of the Water Agency or Water District.

Technical specifications and detail drawings for water transmission mains will be prepared by Water Supply and given to the Consultant to be included with the improvement plans.

Under no circumstances shall fire hydrants or water services be directly connected to a transmission main.

A. Transmission System Layout Requirement

The transmission main layout requirements on the Improvement Plans shall be as follows:

1. The transmission mains shall be shown in full in plan and profile views, including valves, air relief/vacuum valve assemblies, blow off assemblies, and all other appurtenances.

2. Elevations shall be listed at all changes in slope.

3. Transmission mains shall maintain a minimum vertical clearance from all other utilities of 12-inches (1 foot).

4. Thrust restraint shall be by means of pipe joint restraining devices only; thrust blocks shall not be used unless authorized by Water Supply.

B. Transmission Main Location

All transmission mains shall be installed within public rights-of-way and easements.

1. The water transmission main shall be located on the north or west side of a street. The water transmission main shall be located at a minimum of four feet from the lip of gutter. The transmission main and valve actuators will be located so that the valve boxes will be located in the center of a traffic lane or on traffic lane lines. A deviation from these criteria may be allowed if approved by Water Supply in consultation with other affected utility providers.

2. Water transmission mains shall not be located within Landscape corridors, unless approved by Water Supply as a result of unresolvable conflicts with other utilities.

3. Ten (10) feet shall be the minimum horizontal separation between water transmission mains and sanitary sewer mains or recycled water mains. Separation may be less if it is accordance with California State Department of Health Services requirements and approved by Water Supply. Every attempt should be made to keep the bottom of the water transmission main at a higher elevation than the sewer main or recycled water main.

4. When crossing a sanitary sewer force main, it shall be specified that the water main be installed a minimum of three (3) feet above the sewer line and be of cast iron or ductile iron.

5. Minimum cover under roadways shall be 36 inches for PVC pipe and AWWA C303 pipe, and 30 inches for ductile iron pipe.

6. Minimum cover in open fields shall be 60 inches for PVC pipe and AWWA C303 pipe, and 48 inches for ductile iron pipe.

8-15 DISTRIBUTION MAIN DESIGN

Sizing of distribution mains shall be such that the normal pressures stated in Section 8-10 and the minimum requirements as stated below for distribution main spacing and sizing are maintained.

The Hazen-Williams formula shall be used in the hydraulic study of the system, using a "C" value of 125 for cement-lined pipe, polyvinyl chloride pipe , and ductile iron pipe.

A Hardy-Cross hydraulic analysis of any proposed distribution system shall be supplied to Water Supply upon request. In design of the system, the maximum assumed delivery from any hydrant of a type conforming to current County Standard Construction Specifications shall be assumed to be limited to 1,500 gallons per minute.

A. Distribution Main Design Plan Requirements

The water distribution main design plan requirements on the Improvement Plans shall be as follows:

1. The distribution main shall be shown in plan and profile. A water plan sheet shall be included as part of the improvement plans, showing locations of valves, fire hydrants, existing water lines, air release/vacuum valves, blow off valves, and water services. The scale of the water plan should be 1"=100', however, the scale of the water plan may be 1"=200' if the 1"=100' scale does not fit on one plan sheet. For commercial and apartment plans, a water plan that fits onto one sheet shall be provided as part of the improvement plans.

2. Details of distribution mains crossing other utilities or unusual alignments will be provided if deemed necessary by Water Supply.

3. This paragraph shall be included on the water plan sheet of improvement plans for developments that will be served retail water by the Water District. Polyvinyl Chloride distribution mains shall have 4 inches of sand bedding material. If existing soil is too porous to hold sand, 4 inches of crushed aggregate or a geotextile fabric placed on the trench bottom and covered with 4 inches of sand may be used. The use, and type of geotextile, and crushed aggregate must be approved by the Water Agency.

4. This paragraph and the following paragraph shall be included on the water plan sheet of improvement plans for developments that will be served retail water by the Water District. Ductile Iron distribution mains shall have six (6) inches of sand bedding. If existing soil is too porous to hold sand, a geotextile fabric placed on the trench bottom and covered with 6 inches of sand may be used. The use, and type of geotextile, must be approved by the Water Agency. Ductile Iron distribution mains shall have sand backfill to six (6) inches above the top of the distribution main. The Ductile Iron distribution main shall be encased in 8 mil polyethylene encasement in accordance with AWWA C105.

   Bedding and backfill for both ductile iron pipe and polyvinyl chloride pipe shall be compacted to 90% relative compaction. Grooves shall be dug in the pipe bedding to accommodate pipe bells, fittings, and joints so that the pipe is continuously supported by the bedding material.

5. Stationing for all fittings, shut off valves, air release/vacuum valves, and in line blow-off valves shall be called-out in the profile view of the improvement plan sheets. Elevations shall be called-out at all changes in pipe elevation.

6. Commercial, industrial, and apartment Improvement Plans with a water easement shall have a note that states, "Utilities may not be located within water easement(s) except if the utility crosses the water easement within 20 degrees of perpendicular to the water main."

B. Distribution Main Location

All water distribution mains shall be installed within public rights-of-way or easements.

1. The centerline of the water distribution main shall be located three (3) feet from the lip of the gutter on the northerly or westerly side of the street. A deviation from this criteria may be allowed if approved by Water Supply in consultation with other affected utility providers.

   If it should be necessary because of existing improvements or possible conflict with other utilities, and with the approval of Water Supply, the distribution mains may be

installed within a 15 foot wide easement immediately adjacent to and behind the property line fronting on the public right-of-way.

2. If it is necessary to install a water distribution main within a private road, the water easement shall be the width of the paving plus one foot each side. Water easements over water distribution mains located on commercial, industrial, or apartment properties shall have a minimum width of 15 feet. The water main shall be centered in the easement.

3. If it is necessary to install a water distribution main within a landscape corridor, then no trees shall be planted within five feet of the water main. The water distribution main shall be centered within a 15 foot wide water easement. The landscape plans for the corridor shall be submitted prior to approval of the improvement plans.

4. If a water distribution main is required to be installed between residential homes, the pipe material shall be Class 350 Ductile Iron Pipe, installed with 6 inches of sand bedding, 8-mils of polyvinyl encasement in accordance with AWWA C105, backfilled with sand to 6 inches above the top of the pipe, and a 6 inch wide warning tape shall be placed on the backfill. The center of the main shall be centered within a 15 foot wide easement.

5. Ten (10) feet shall be the minimum horizontal distance between parallel water distribution and sanitary sewer mains or recycled water mains. The water distribution main shall be higher than the sewer main or recycled water main. Separation may be less if it is accordance with California State Department of Health Services requirements and approved by Water Supply.

6. On all utility crossings, the water distribution main shall maintain a separation at least 12-inches (1 foot) from the utility.

7. When crossing a sanitary sewer force main, it shall be specified that the water distribution main be installed a minimum of three (3) feet above the sewer line and be ductile iron.

8. Water distribution mains to be installed in public right-of-ways or easements not conforming to Items 1 through 5 above shall be approved by Water Supply in consultation with other affected utility providers.

C. Distribution Main Layout and Sizing

The distribution system, whenever possible, shall be in grid form so that pressures throughout the system tend to become equalized under varying rates and locations of maximum demand, and to provide system redundancy. The minimum pressures and

flows as specified shall govern design of the system. The following conditions are to be considered for the distribution system design:

1. In general, the minimum pipe size shall be eight inches inside diameter for looped systems, and six inches for dead end runs that do not have a fire hydrant at the end, or for all dead end runs less than 50 feet.

2. Where distribution mains are installed in a major thoroughfare (84 feet right-of-way or greater), dual mains (one pipeline on each side of the street) may be required.

3. Mains shall maintain a minimum cover of 30-inches (36-inches in rights-of-way 50 feet and greater), and when not avoiding other utilities mains shall have a maximum depth of 60-inches, unless otherwise specified by Water Supply. Both distances shall be measured from gutter flow-line.

D. Distribution Main Pipe Restraint

Pipes shall be restrained from movement as a result of thrust on the fittings and valves of the water system. Thrust restraint for bends and tees may be accomplished with thrust blocks as described in Drawing 8-3A, or by means of pipe joint restraining devices as described in Drawing 8-3B. Thrust blocks must be poured against undisturbed soil.

E. Type of Distribution Main Pipe and Pipe Deflection

Pipe used in the construction of water distribution systems shall be Polyvinyl Chloride or Ductile Iron pipe. Pipe deflection at joints shall not exceed one-half of the manufacturer's recommended deflection. Deflection and bending of Polyvinyl Chloride pipe shall not exceed the limits described in Drawing 8-9.

8-16 WATER SYSTEM APPURTENANCES

Water system appurtenances include fire hydrants, water service lines, water meters, detector check valves, and back-flow devices.

A. Fire Hydrants and Blow-off Assemblies

Fire hydrants and blow-off assemblies shall be located as follows:

1. Fire hydrants shall be connected to distribution mains only. Fire hydrants shall not be connected to transmission mains.

2. Fire hydrants shall be placed at street intersections wherever possible, and located to minimize the hazard of damage by traffic. They shall have a maximum normal spacing of 500 feet measured along the street frontage in residential developments, 300 feet in commercial developments, or closer if deemed necessary by the local Fire District. Hydrants located at intersections shall be installed at the curb return. Within residential areas, all other hydrants shall be located on property lines between lots. See Drawings 8-2A and 8-2B for specifications and typical installation details.

3. The minimum size main serving a fire hydrant shall be six inches in diameter, however in this situation, the distance from the nearest intersecting main to the hydrant shall not be greater than 50 feet if fire flow requirements are 1500 gpm, or 10 feet if fire flow requirements are greater then 1500 gpm. Not more than one hydrant shall be placed on a six-inch main between intersecting water mains. The pipeline connecting the hydrant and the main shall be a minimum of six-inch in diameter, with a gate valve flange connected to the main.

4. A fire hydrant or four (4)-inch blow-off assembly shall be installed on all permanent dead-end runs including cul-de-sacs. If the local Fire District requires a hydrant at the end of a dead-end run, then a 4-inch Blow-off assembly will not be allowed. Two-inch Blow-off valves shall be used if dead-end runs are temporary. Wherever possible, the blow-off assemblies shall be installed in the street right-of-way, a minimum distance of three (3) feet from the lip of gutter. In no case shall the location be such that there is a possibility of back-siphonage into the distribution system. See Drawings 8-12, and 8-13 for specifications and typical installation details.

B. Water Service Lines

Service lines from the water distribution main to the property line or edge of easement shall normally be installed at the time the main is constructed. Services from mains installed in private roads shall extend one foot beyond the edge of the pavement. Service line criteria shall be as follows:

1. In all new subdivisions, the service line shall be located between 9 inches and 30 inches from the side property line.

2. Normal size of a residential service line shall be one inch. Schools, commercial, industrial, or multiple-family units with higher water demand shall be provided with larger service lines, subject to approval of Water Supply. All services shall be installed with a corporation stop at the main and a curb stop or gate valve at the property line. The curb stop shall be used only when the service is less then 4 inches. A gate valve shall be used if the service size is 4 inches or larger. Installation of a valve box is required over all gate valves.

3. The Water Quality Division Maintenance Section shall make all water service taps into existing mains upon application for a permit and payment of the required fees. A note to this effect shall be placed on the plan sheet which details the area that requires such tapping. Application should be made to Sacramento County of Public Works Agency and the required fees paid at least five (5) days in advance of the time the tap is desired. The Contractor shall do all excavation and backfill, and the installation of the remainder of the water service. (Note: The above applies only when the service is constructed as a part of an improvement contract. For rules regarding the installation of an individual water service, contact Water District at 875-7014.)

C. Water Meters
Water meters shall be installed on all residential, commercial, industrial, multi-family, and irrigation water services. Residential meters and meter boxes will be installed by the builder after building permits are issued, not when water service lines are installed. Size of water meter shall not be less than the size of the service line unless approved by Water Supply. See Drawings 8-6A, 8-6B, and 8-6C for specifications and typical installation details.

D. Detector-Check Valves
A detector-check valve and bypass meter is required on each fire service line into a building. See Drawing 8-7 for specifications and typical installation details.

E. Back-Flow Devices
Back-flow devices are required in accordance with Title 17, Chapter V, and Sections 7583-7622 of the California Administrative Code. See Drawings 8-8A and 8-8B for specifications and typical installation details.

F. Air Release/Vacuum Valve Assemblies
Air release/vacuum valve assemblies are requires at high points in a distribution system as determined by Water Supply. See Drawing 8-14 for specifications and typical installation details.

8-17 RECYCLED WATER AND NON-POTABLE WATER TRANSMISSION MAINS AND DISTRIBUTION MAINS

Recycled water and non-potable water facilities may be required by the Water Agency or Water District for use in specified areas as determined by Water Supply. Design flows and demands for recycled and non-potable water systems shall be determined by the Water Agency. Design requirements for recycled water and non-potable water transmission mains and distribution mains are similar to potable water; however, there are special provisions described as follows:

1. To avoid cross connection of the potable and non-potable water systems, recycled water and non-potable facilities shall be clearly marked through appropriate coloring of pipe materials and above ground appurtenances.

2. All materials and work shall be in accordance with the latest edition of the Sacramento County Standard Construction Specifications for the construction of potable water systems. Because recycled water and non-potable facilities are not specifically addressed in the Standard Construction Specifications, special construction requirements shall be obtained from Water Supply.

3. Coloring of pipes shall be colored purple and embossed or integrally stamped/marked "CAUTION: NONPOTABLE WATER – DO NOT DRINK", or "CAUTION: NONPOTABLE WATER – DO NOT DRINK". Valve and meter

boxes shall be colored purple and have the words "NONPOTABLE WATER" stamped into the face.

4. All above ground facilities shall be marked with a sign to caution against drinking water from the recycled water system. All signs shall be made and placed in such a manner as to become a permanent part of the facility or appurtenance. Park sites, large turf areas, and other publicly used areas may require warning signs of the appropriate size as determined by Water Supply or other regulatory agency.

5. The recycled water system shall maintain a minimum pressure of 40 psi.

6. The recycled and non-potable water mains shall be located on the south and east side of a street. The recycled and non-potable water mains shall be located at a minimum of four feet from the lip of gutter. The recycled and non-potable water mains and valve actuators will be located in the center of traffic lanes or on traffic lane lines. A deviation from these criteria may be allowed if approved by Water Supply in consultation with other affected utility providers.

8-18 RECORD PLANS

Record Drawings shall be in accordance with Section 2-11 *Record Plans* of these improvement standards and shall also include the following:

1. Each sheet of the improvement plan shall be labeled or stamped "As-Built" or "Record Drawing".

2. Elevations of the top of the end of distribution mains and transmission mains.

3. The type of water distribution main and transmission main pipe installed shall be clearly marked on each sheet.

4. The type of end fitting and pipe at the end of the distribution mains and transmission mains shall be described.

5. Changes of location of shut-off valves, fittings, air release/vacuum valves, blow-off assemblies, hydrants, and water services for which an improvement plan revision was not obtained.

Record Drawings shall be approved by Water Supply prior to acceptance of the project.

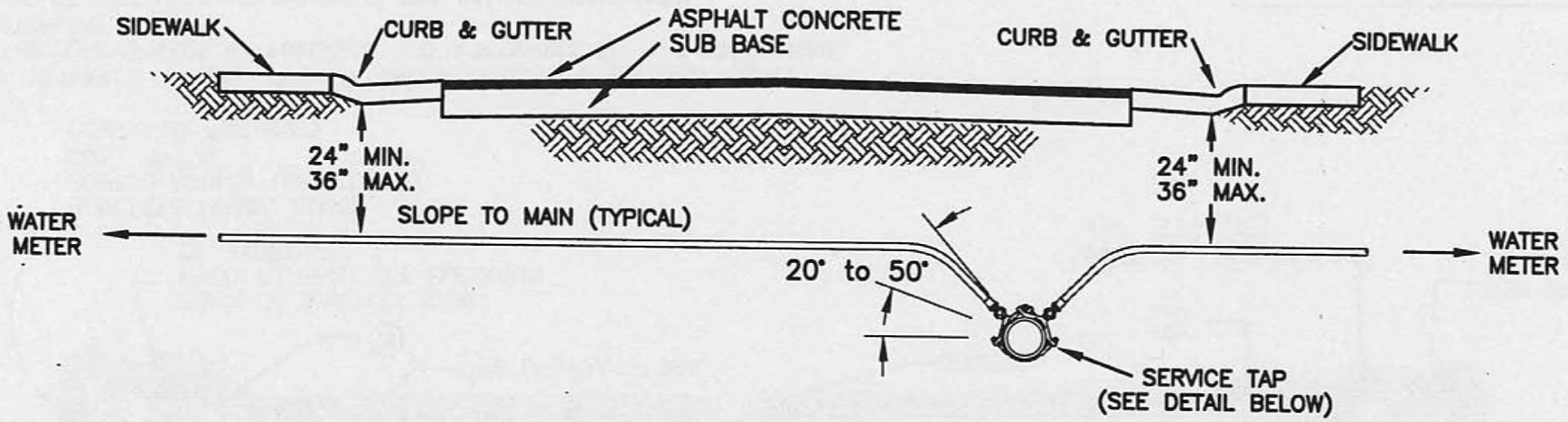

NOTES:

1. CORPORATION STOP, METER CURB STOP AND WATER SERVICE LINE ARE TO BE THE SAME SIZES.
2. SERVICE SADDLES SHALL HAVE A SINGLE WIDE BRONZE STRAP FOR 1" AND 2" SERVICES. DOUBLE STRAPS, FLATTENED TO PROVIDE A WIDE BEARING SURFACE AGAINST THE PIPE, SHALL BE USED FOR SERVICE SADDLE SIZES LARGER THAN 2 INCHES, EXCEPT WHERE SIZE OF TAP EXCEEDS MANUFACTURER'S RECOMMENDED LIMIT FOR SIZE OF WATER MAIN. FOR THIS SITUATION, A SPECIAL FITTING SHALL BE SPECIFIED. BRONZE 'U' BOLTS (NOT FLATTENED) MAY BE PLACED ON CAST IRON AND DUCTILE IRON WATER MAINS.
3. SERVICE SADDLES, CORPORATION STOPS, COUPLING NUTS, BOLTS, AND ALL APPURTENANCES SHALL BE BRONZE.
4. SERVICE TAP MUST BE MADE BETWEEN 20 DEGREES TO 50 DEGREES ABOVE THE SPRINGLINE OF THE PIPE.
5. SERVICE TAPS SHALL BE A MINIMUM OF 18" APART ALONG THE WATER MAIN.
6. INSULATED LOCATING WIRE REQUIRED ON ALL SERVICE LINES, SEE DRAWING 8–4. WIRE SHALL BE CONNECTED TO LOCATING WIRE ALONG WATER MAIN FOR CONTINUITY.

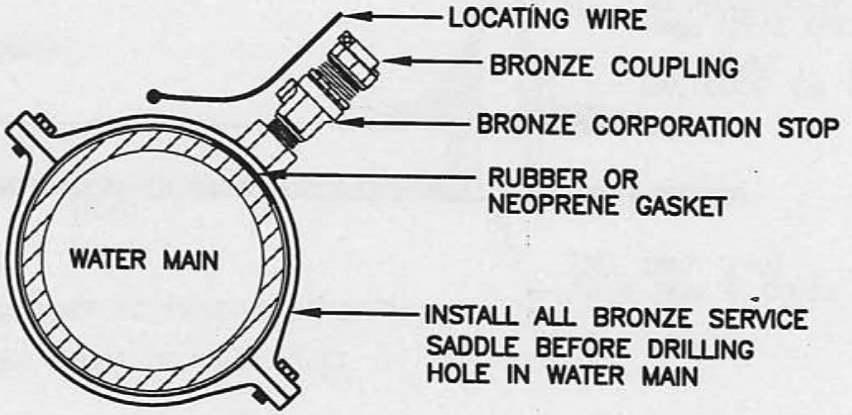

SERVICE TAP DETAIL

Robert A. Ishii
DIRECTOR

SACRAMENTO COUNTY
PUBLIC WORKS AGENCY

WATER SERVICE INSTALLATION

SCALE: NONE
DATE: 3/99

8-1

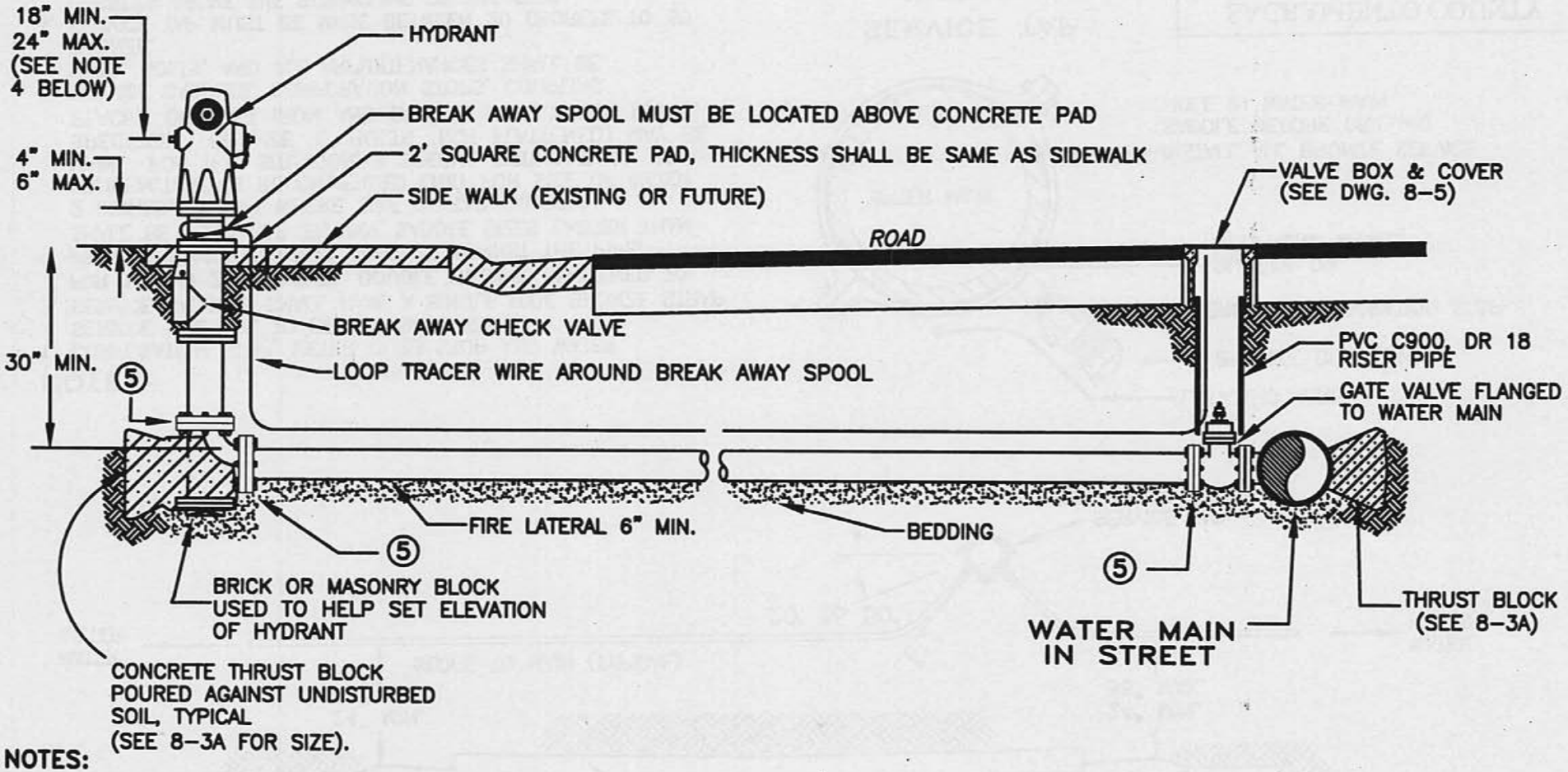

NOTES:

1. IN COMMERCIAL AREAS, FIRE HYDRANTS SHALL BE PROTECTED FROM VEHICULAR DAMAGE BY BOLLARDS AND ACCESSIBLE TO FIRE PROTECTION EQUIPMENT.
2. TYPE OF FIRE HYDRANT SHOWN IS FOR ILLUSTRATIONS ONLY.
3. GATE VALVE SHALL BE FLANGED TO THE WATER MAIN.
4. LOWEST CAP NUT ON HYDRANT SHALL BE 18" MIN. TO 24" MAX. ABOVE TOP OF CONCRETE PAD.
5. THESE JOINTS MAY BE FLANGE, OR RESTRAINED MECHANICAL JOINTS WITH SCWMD APPROVED RESTRAINING DEVICE.

Robert A. Ahrens
DIRECTOR

SACRAMENTO COUNTY
PUBLIC WORKS AGENCY

FIRE HYDRANT INSTALLATION
WATER MAIN IN STREET

SCALE: NONE
DATE: 3/99

8-2A

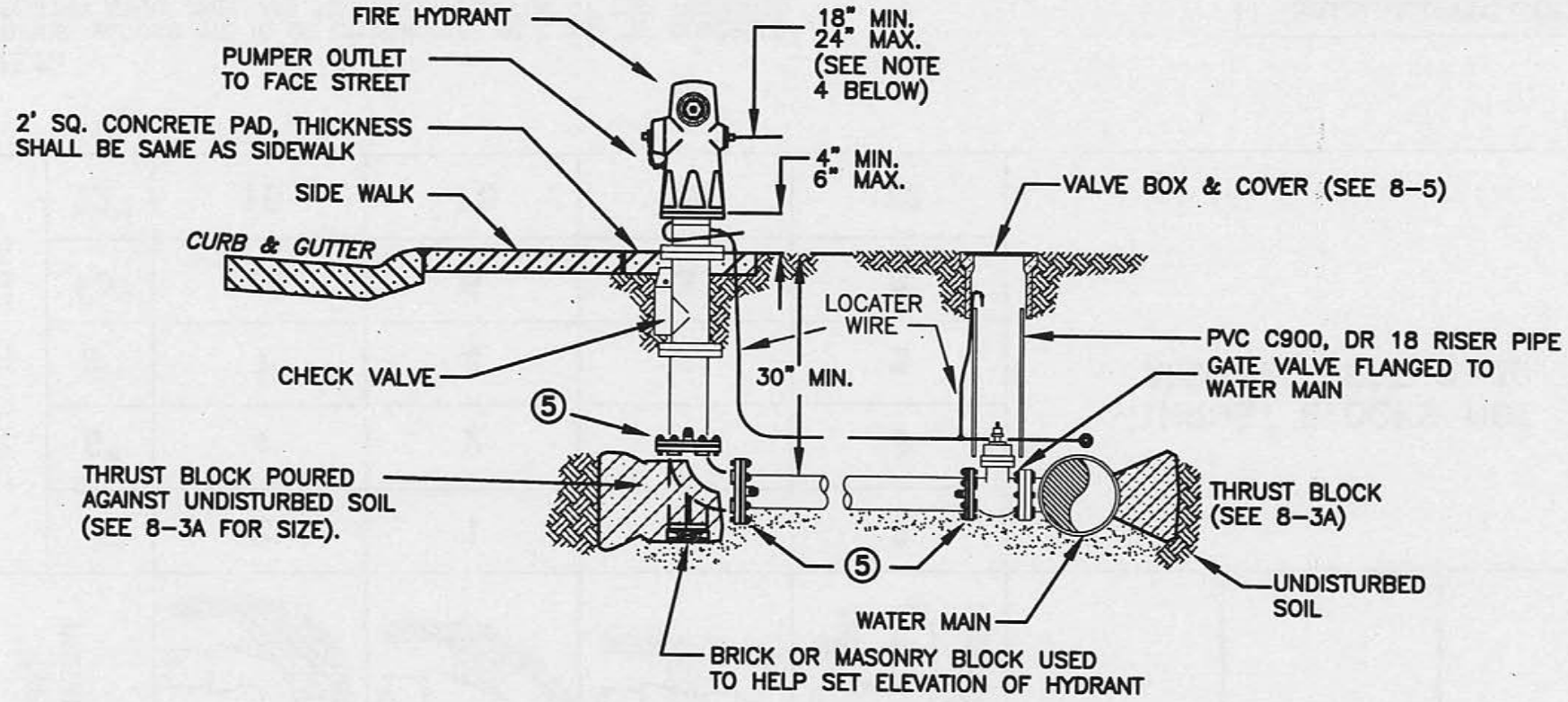

NOTES:

1. IN COMMERCIAL AREAS, FIRE HYDRANTS SHALL BE PROTECTED FROM VEHICULAR DAMAGE BY BOLLARDS AND BE ACCESSIBLE TO FIRE PROTECTION EQUIPMENT.
2. TYPE OF HYDRANT SHOWN IS FOR ILLUSTRATIONS ONLY.
3. GATE VALVE SHALL BE FLANGED TO THE WATER MAIN.
4. LOWEST CAP NUT ON HYDRANT SHALL BE 18" MIN. TO 24" MAX. ABOVE TOP OF CONCREETE PAD.
5. THESE JOINTS MAY BE FLANGED, OR RESTRAINED MECHANICAL JOINTS WITH SCWMD APPROVED RESTRAINING DEVICE.

DIRECTOR

SACRAMENTO COUNTY
PUBLIC WORKS AGENCY

FIRE HYDRANT INSTALLATION
WATER MAIN NOT IN ROADWAY

SCALE: NONE
DATE: 3/99

8-2B

REQUIRED BEARING AREA IN TOTAL SQUARE FEET

TYPE OF FITTING		90° BEND	45° BEND	11-1/4° BEND 22-1/2° BEND	TEE OR DEAD END	TEE WITH PLUG	CROSS WITH PLUG	CROSS WITH PLUGS
TYPICAL INSTALLATION		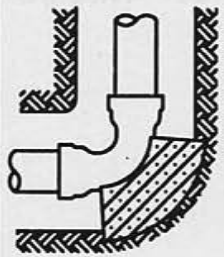		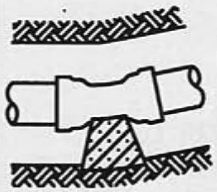	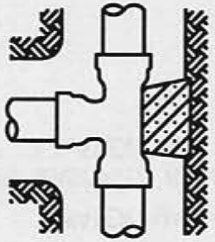			
SIZE OF PIPE	4"	2	1	1	2	THRUST BLOCKS NOT ALLOWED, SEE 8-3B		
	6"	4	2	1	3			
	8"	7	4	2	5			
	10"	12	6	3	8			
	12"	16	10	5	12			

NOTES:

1. THRUST BLOCKS ARE TO BE CONSTRUCTED OF CLASS "B" CONCRETE.
2. BEARING AREAS GIVEN ARE FOR CLASS 150 PIPE AT TEST PRESSURE OF 150 PSI IN SOIL WITH 2,000 PSF BEARING CAPACITY. INSTALLATIONS USING DIFFERENT PIPE, TEST PRESSURES, SOIL TYPES SHOULD ADJUST AREAS ACCORDINGLY, SUBJECT TO THE APPROVAL OF SCWMD.
3. THRUST BLOCKS ARE TO BE POURED AGAINST UNDISTURBED SOIL.
4. PIPE JOINTS ARE TO BE KEPT CLEAR OF CONCRETE.

DIRECTOR

SACRAMENTO COUNTY PUBLIC WORKS AGENCY

THRUST BLOCK BEARING AREA

SCALE: NONE
DATE: 3/99

8-3A

RESTRAIN LENGTH IN FEET

PIPE CONFIGURATION	CROSSING PIPE SIZE	DEPTH OF 30"								DEPTH OF 60"							
		6"		8"		10"		12"		6"		8"		10"		12"	
		DIP	PVC	DIP	PVC	DIP	PVC	DIP	PVC	DIP	PVC	DIP	PVC	DIP	PVC	DIP	PVC
IN LINE VALVE 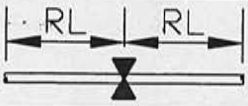		38	24	45	31	58	38	70	46	17	17	26	24	32	30	41	38
VALVE AT TEE 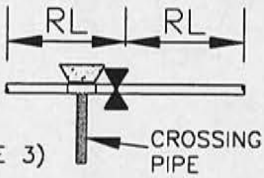 (SEE NOTE 3)	6"	3	2	17	13	37	24	48	33	3	2	12	10	20	19	30	26
	8"	2	2	12	8	27	19	43	30	2	2	6	5	17	15	27	24
	10"	2	2	4	3	19	15	39	28	2	2	2	2	12	11	24	21
	12"	2	2	2	2	14	10	32	24	2	2	2	2	10	8	20	19
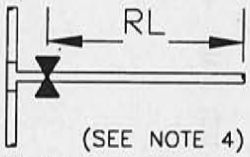 (SEE NOTE 5)		37	21	42	27	56	32	68	38	16	15	23	21	30	24	38	30
	6"	2	2	18	15	41	26	50	34	2	2	14	12	22	20	32	28
VALVE AT CROSS 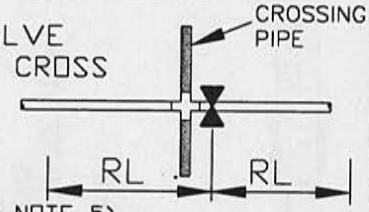 (SEE NOTE 5)	8"	2	2	16	12	32	20	44	32	2	2	6	4	18	16	29	26
	10"	2	2	4	4	20	17	40	32	2	2	2	2	14	12	26	24
	12"	2	2	3	2	18	14	34	26	2	2	2	2	12	10	22	20

RL = RESTRAINED LENGTH

NOTES:

1) ALL JOINTS WITHIN THE RESTRAIN LENGTH MUST BE RESTRAINED.
2) IF RESTRAIN LENGTH IS GREATER THAN 20', DUCTILE IRON PIPE WITH INSIDE THE BELL RESTRAINING DEVICES MUST BE USED FOR THE ENTIRE RESTRAINED LENGTH.
3) RESTRAIN LENGTH FOR THE TEE DESCRIBED, ASSUMES A THRUST BLOCK IS INSTALLED AT LOCATIONS SHOWN ABOVE. IF THRUST BLOCK IS NOT INSTALLED RESTRAIN LENGTH MUST BE APPROVED BY WATER SUPPLY.
4) THIS CONFIGURATION IS ONLY TO BE USED IF A THRUST BLOCK CAN NOT BE POURED BEHIND THE TEE AND AGAINST UNDISTURBED SOIL.
5) JOINTS ON PIPES PERPENDICULAR (CROSSING PIPES) TO RESTRAIN LENGTH RUN, MUST BE RESTRAINED FOR A MIN. OF 4 FEET.
6) THE RESTRAIN LENGTHS ARE BASED ON A WATER PRESSURE OF 150 PSI. IF HIGHER PRESSURE OR HIGHER SURGE PRESSURES ARE ANTICIPATED, THEN THIS TABLE DOES NOT APPLY AND RESTRAIN LENGTH MUST BE APPROVED BY SCWMD.

Robert J. Shaw
DIRECTOR

SACRAMENTO COUNTY
PUBLIC WORKS AGENCY

PIPE RESTRAINED LENGTH

SCALE: NONE
DATE: 3/99

8-3B

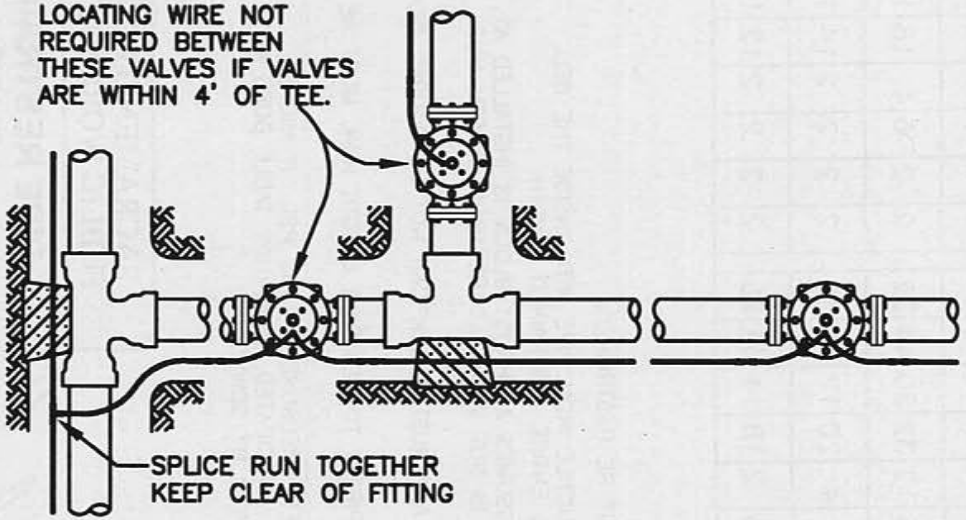

TYPICAL LAYOUT

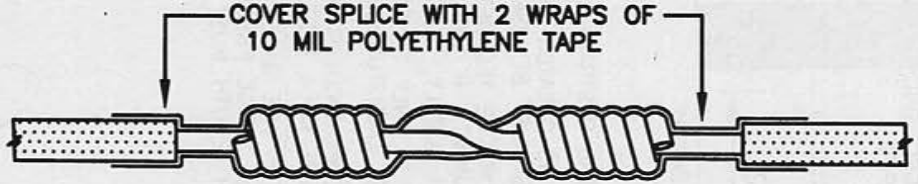

SPLICE DETAIL

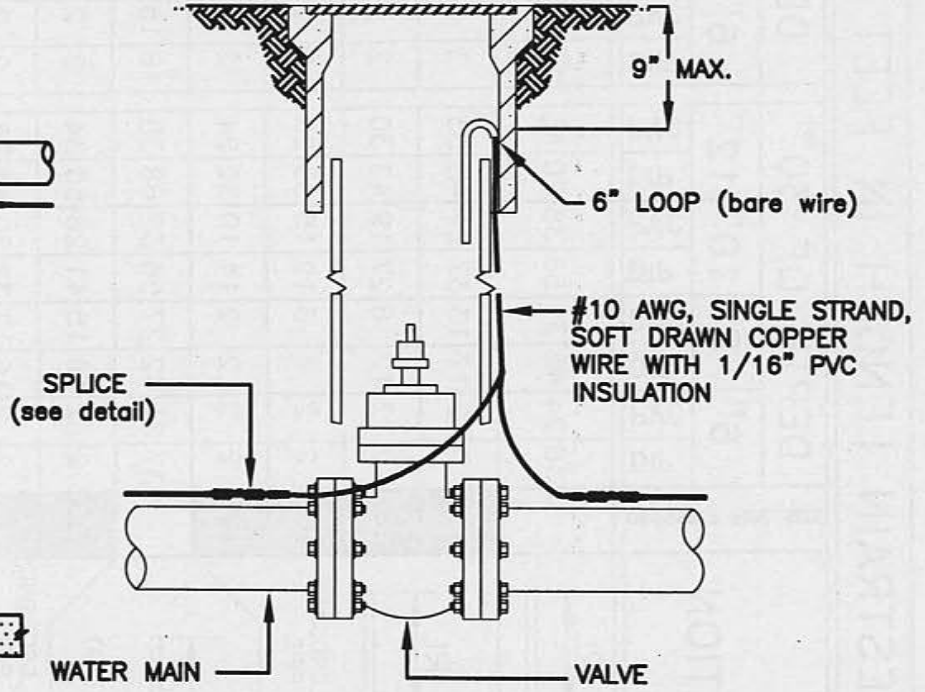

VALVE DETAIL

NOTES:

1. WIRE SHALL BE CONTINUOUS BETWEEN VALVE BOXES, EXCEPT AS NOTED.
2. LOCATING WIRE SHALL BE LAID ON TOP OF THE WATER MAIN, AND SHALL BE TAPED TO IT OR THE POLYETHYLENE ENCASEMENT (IF THE PIPE IS DUCTILE IRON) AT 10' INTERVALS AND TAPED AT ALL FITTINGS. TAPE SHALL BE 10 MIL POLYETHYLENE.
3. CONTRACTOR SHALL CONDUCT A CONTINUITY TEST ON ALL LOCATING WIRE SPLICES.
4. ALL SPLICES SHALL BE SOLDERED.

Robert J. Shenk
DIRECTOR

SACRAMENTO COUNTY
PUBLIC WORKS AGENCY

LOCATING WIRE FOR WATER MAINS AND SERVICES

SCALE: NONE
DATE: 3/99

8-4

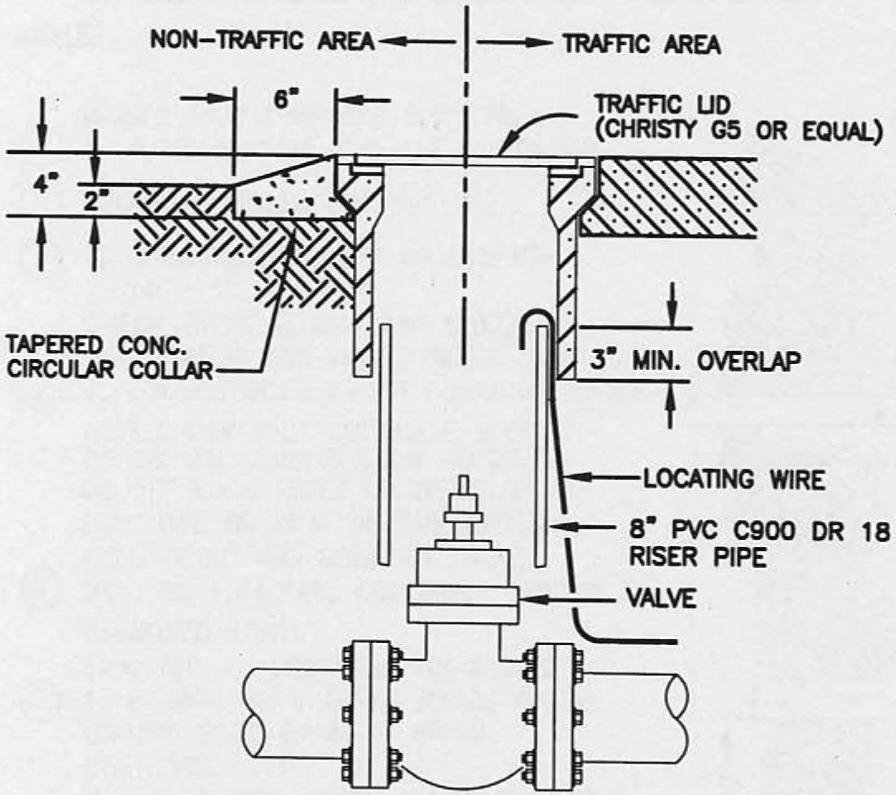

TRAFFIC VALVE BOX

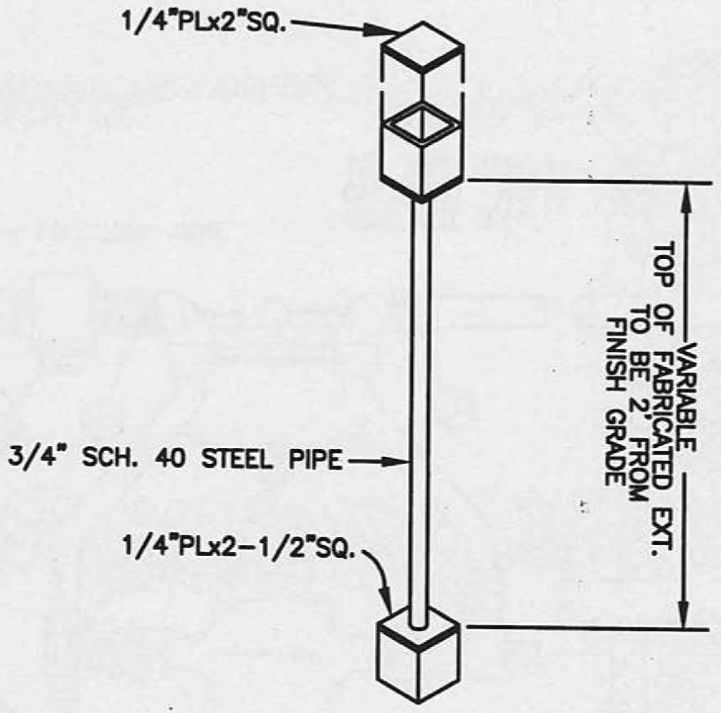

VALVE OPERATING NUT EXTENSION

REQUIRED WHERE VALVE NUT IS IN EXCESS OF 10 FEET BELOW FINISH GRADE.

NOTES:

1. VALVE BOX AND RISER SHALL BE SET PLUMB AND CENTERED OVER WATER VALVE NUT.
2. SET VALVE BOX TO FINAL FINISH GRADE. IN AREAS WHERE THE FINISH GRADE HAS NOT BEEN DEFINED, PLACE 4"X4" LOCATING POST PAINTED BLUE WITHIN 1 FOOT OF VALVE BOX. POST SHALL BE 6 FEET IN LENGTH AND BURIED 3 FEET.

Robert J. Shaw
DIRECTOR

SACRAMENTO COUNTY
PUBLIC WORKS AGENCY

VALVE BOX INSTALLATION AND OPERATING NUT EXTENSION

SCALE: NONE
DATE: 3/99

8-5

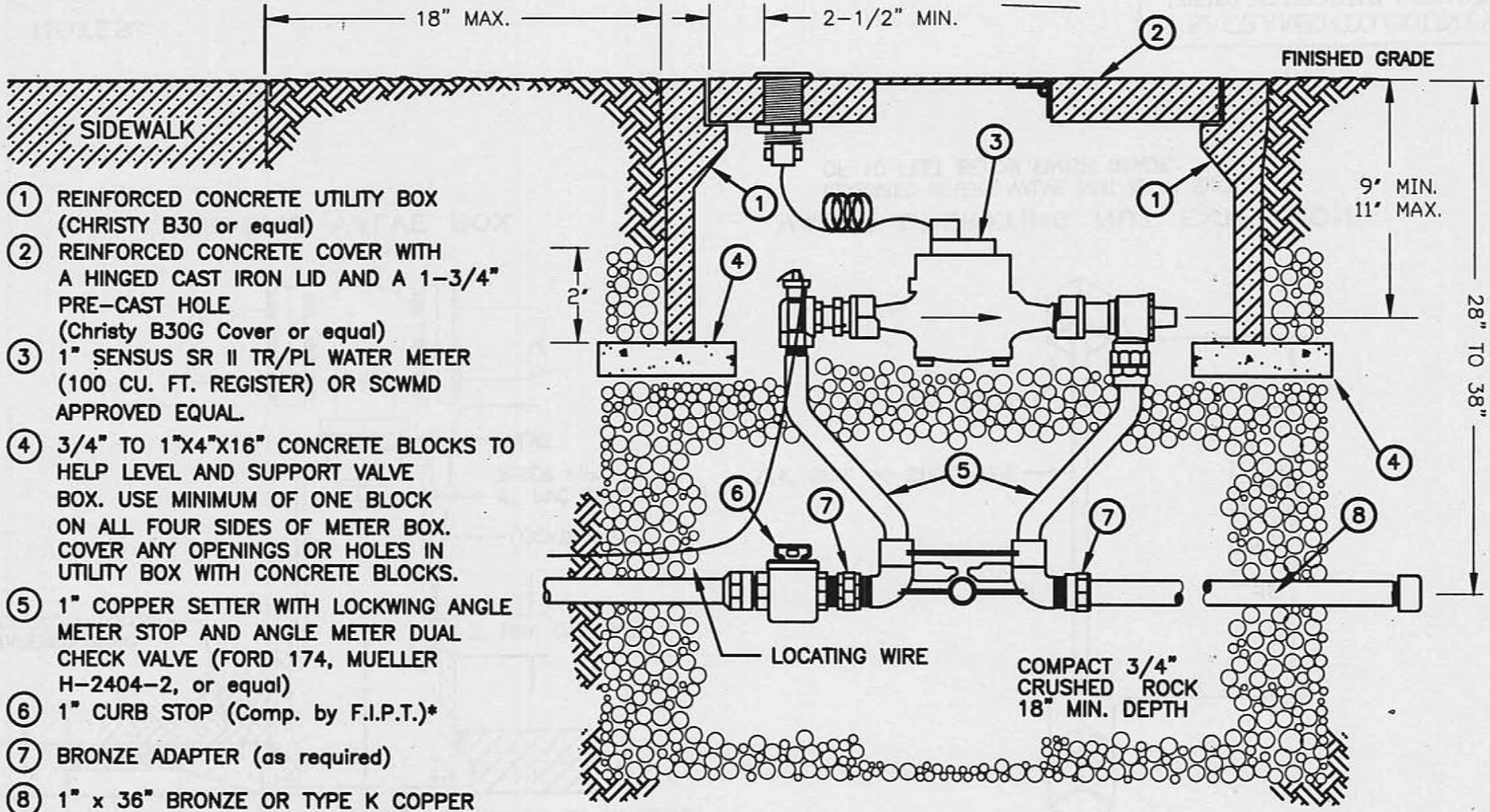

1. REINFORCED CONCRETE UTILITY BOX (CHRISTY B30 or equal)
2. REINFORCED CONCRETE COVER WITH A HINGED CAST IRON LID AND A 1-3/4" PRE-CAST HOLE (Christy B30G Cover or equal)
3. 1" SENSUS SR II TR/PL WATER METER (100 CU. FT. REGISTER) OR SCWMD APPROVED EQUAL.
4. 3/4" TO 1"X4"X16" CONCRETE BLOCKS TO HELP LEVEL AND SUPPORT VALVE BOX. USE MINIMUM OF ONE BLOCK ON ALL FOUR SIDES OF METER BOX. COVER ANY OPENINGS OR HOLES IN UTILITY BOX WITH CONCRETE BLOCKS.
5. 1" COPPER SETTER WITH LOCKWING ANGLE METER STOP AND ANGLE METER DUAL CHECK VALVE (FORD 174, MUELLER H-2404-2, or equal)
6. 1" CURB STOP (Comp. by F.I.P.T.)*
7. BRONZE ADAPTER (as required)
8. 1" x 36" BRONZE OR TYPE K COPPER NIPPLE WITH THREADED END CAP

NOTE:

ALL METALLIC PIPES AND FITTINGS SHALL BE ENCASED WITH 6 MIL PLASTIC SO THAT NO SOIL IS IN CONTACT WITH THE PIPES AND FITTINGS

* Compression by female iron pipe threads

Robert J. Shaw

DIRECTOR

SACRAMENTO COUNTY PUBLIC WORKS AGENCY

1" RESIDENTIAL METERED WATER SERVICE

SCALE: NONE
DATE: 3/99

8-6A

1. REINFORCED CONCRETE UTILITY BOX (CHRISTY B36 FOR 1–1/2" & 2", B30 FOR 1", OR EQUAL)
2. REINFORCED CONCRETE COVER WITH A HINGED CAST IRON LID AND A 1–3/4" PRE–CAST HOLE LOCATED OPPOSITE WATER LABEL(Christy B36G cover or equal).
3. SENSUS SR TR/PL WATER METER (100 CU. FT. REGISTER) OR SCWMD APPROVED EQUAL.
4. FLANGED WINGED ANGLE METER STOP WITH TEFLON COATED BALL
5. OVAL FLANGED 90° BRONZE FITTING
6. 3/4" TO 1"X4"X16" CONCRETE BLOCK TO HELP SUPPORT VALVE BOX, USE ONE BLOCK ON ALL FOUR SIDES OF METER BOX. COVER ANY OPENINGS OR HOLES IN THE SIDE OF THE UTILITY BOX WITH CONCRETE BLOCK.
7. BRONZE COMPRESSION BY THREADED 90° FITTING.

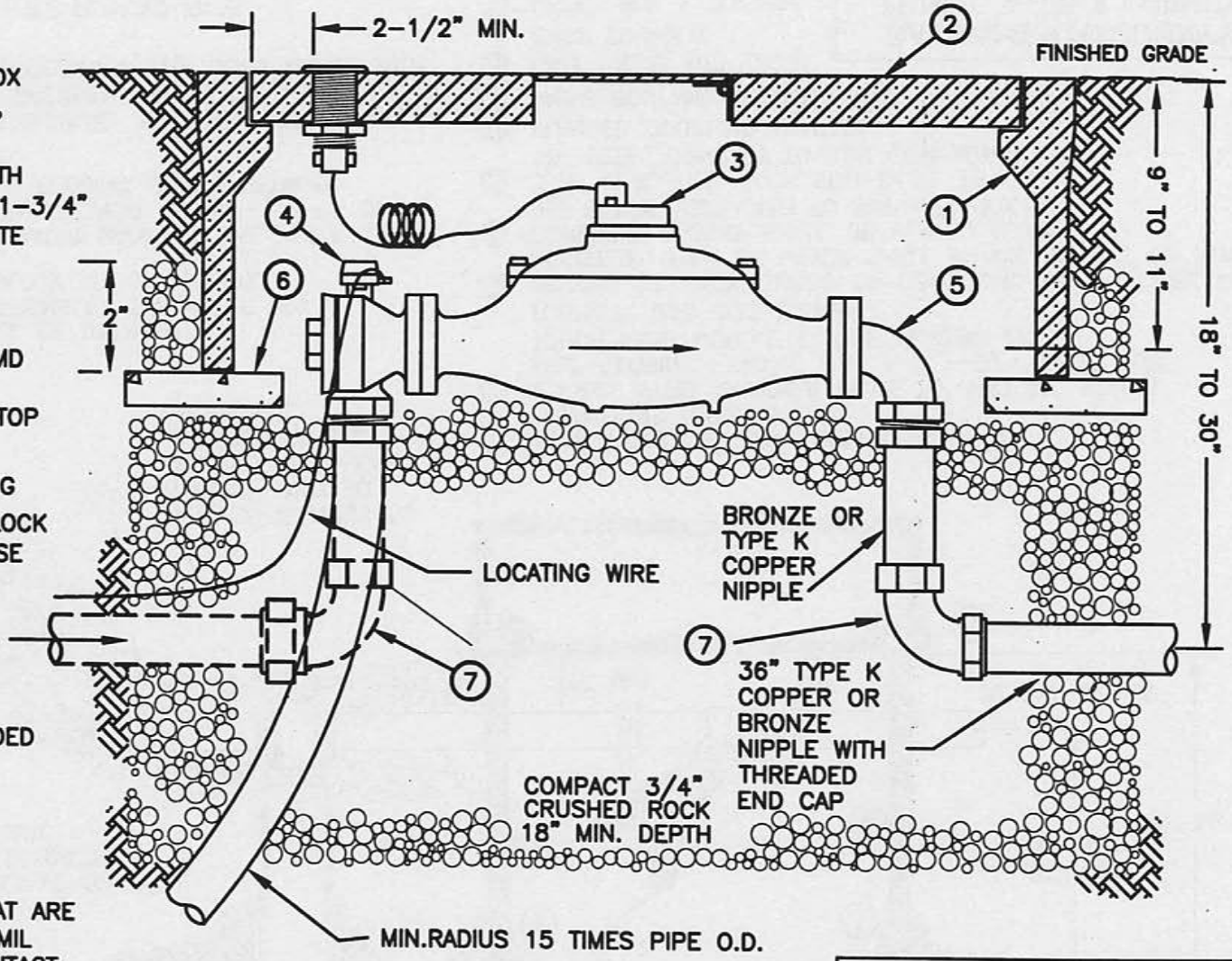

NOTE:
ALL METALLIC PIPES AND FITTING THAT ARE BURIED SHALL BE ENCASED WITH 6 MIL PLASTIC SO THAT NO SOIL IS IN CONTACT WITH THE PIPES AND FITTINGS.

Robert J. Shank
DIRECTOR

SACRAMENTO COUNTY
PUBLIC WORKS AGENCY

**1-1/2" OR 2"
COMMERCIAL METERED
WATER SERVICE**

SCALE: NONE
DATE: 3/99

8-6B

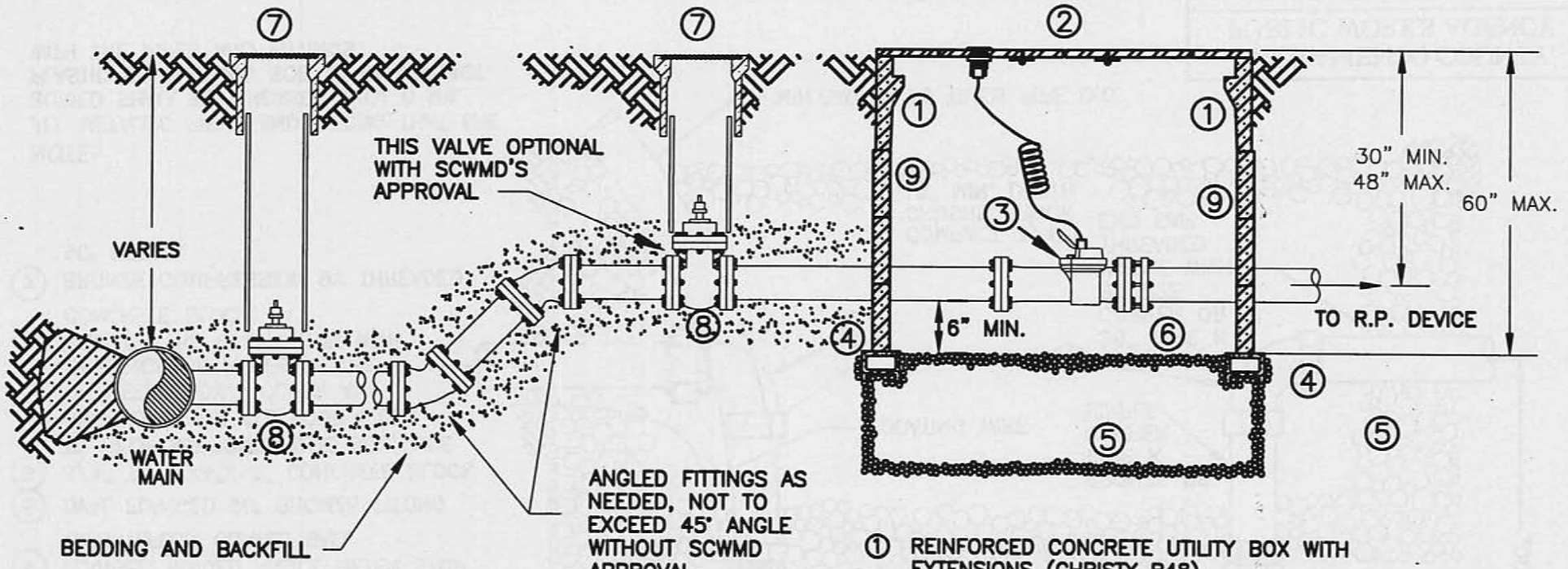

NOTES:

WHEN NEEDED CONCRETE BLOCKS SHALL BE USED TO BLOCK ANY OPENING OR CUT OUT PORTIONS OF THE METER BOX NOT UTILIZED (MINIMUM OF 1" THICK BLOCK ARE REQUIRED).

ALL 4" TO 6" DIA. PIPE BETWEEN THE WATER MAIN AND THE METER SHALL BE DUCTILE IRON WITH POLYETHYLENE ENCASEMENT AND 6 –INCHES OF SAND BACKFILL AND 6–INCHES OF SAND BEDDING. JOINTS BETWEEN MAIN AND METER SHALL BE RESTRAINED.

3" PIPE SHALL BE TYPE K COPPER OR BRONZE WRAPPED WITH 6 MIL PLASTIC AND HAVE SAND BEDDING AND BACKFILL. VALVES ON 3 INCH DIAMETER PIPE SHALL HAVE BRONZE CORPORATION AND CURB VALVES WITH TEFLON COATED BALLS.

VALVES ATTACHED TO THE MAIN MUST HAVE FLANGED ENDS.

INSTALL LOCATING WIRE PER 8–4.

① REINFORCED CONCRETE UTILITY BOX WITH EXTENSIONS (CHRISTY B48)
② 2 PIECE STEEL CHECKER PLATE W/ TWO 10" ROUND SELF–CLOSING READING LIDS AND 1–3/4" HOLE FOR TOUCH READ MODULE IN ONE READING LID. (CHRISTY B48–62G COVER)
③ SENSUS DR TR/PL TURBO OR COMPOUND METER (CUBIC FEET REGISTER). TYPE OF METER SHALL BE CALLED OUT ON PLANS
④ CONCRETE BLOCKS SHALL BE PLACED ALONG THE ENTIRE PERIMETER TO SUPPORT BOX
⑤ 3/4" CHRUSHED ROCK SUB–BASE, 12" TO 18" DEEP, COMPACT TO 90% COMPACTION.
⑥ FLANGED COUPLING ADAPTER.
⑦ VALVE BOX AND LID(SEE 8–5).
⑧ GATE VALVE, WITH BOTH ENDS FLANGED
⑨ METER BOX EXTENSION (TYPICAL)

Robert J. Ahern
DIRECTOR

SACRAMENTO COUNTY
PUBLIC WORKS AGENCY

3" TO 6" METER INSTALLATION

SCALE: NONE
DATE: 3/99

8-6C

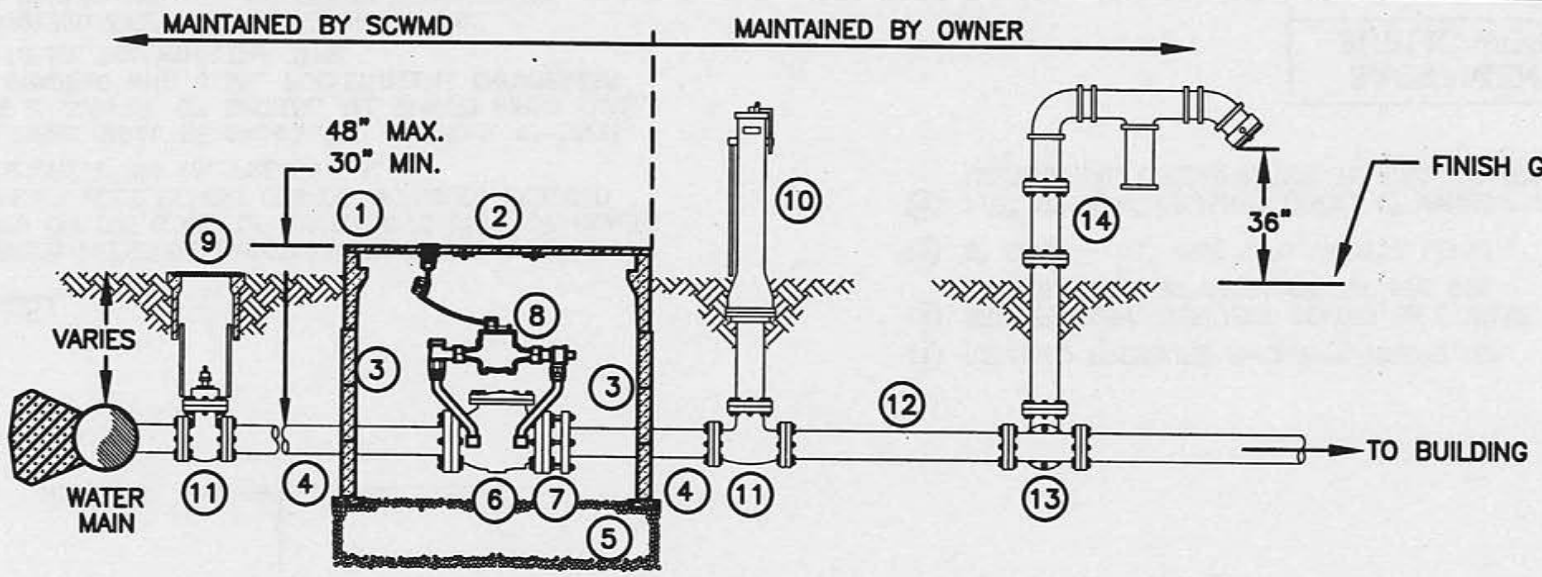

1. REINFORCED CONCRETE UTILITY BOX (CHRISTY B48)
2. 2 PIECE STEEL CHECKER PLATE W/ TWO 10" ROUND SELF-CLOSING READING LIDS AND 1-3/4" HOLE FOR TOUCH READ MODULE IN ONE READING LID. (CHRISTY B48-62G COVER)
3. REINFORCED CONCRETE UTILITY BOX EXTENSIONS.
4. CONCRETE BLOCKS SHALL BE PLACED ALONG THE ENTIRE PERIMETER TO SUPPORT BOX.
5. 3/4" CRUSHED ROCK SUB-BASE, 12" TO 18" DEEP. COMPACT TO 90% RELATIVE COMPACTION.
6. DETECTOR CHECK VALVE-TYPE AND MODEL TO BE APPROVED BY THE FIRE DEPARTMENT AND THE SACRAMENTO COUNTY WATER MAINTENANCE DISTRICT.
7. FLANGED COUPLING ADAPTOR.
8. 5/8" X 3/4" BYPASS METER SHALL BE SENSUS SRII TR/PL CU. FT. REG..
9. VALVE BOX AND LID.(SEE 8-5)
10. FLANGED POST INDICATOR VALVE WITH BREAKAWAY LOCK.
11. GATE VALVE, WITH BOTH ENDS FLANGED.
12. DUCTILE IRON SPOOL.
13. FLANGED TEE.
14. WAFER CHECK.

NOTES:

CHECK VALVE AND PIPE SHALL BE U.L.-F.M. APPROVED.

INSTALLATION MAY VARY WITH FIELD CONDITIONS AND FIRE DEPARTMENT REQUIREMENTS.

INSTALL LOCATING WIRE PER 8-4.

ALL JOINTS BETWEEN MAIN AND DETECTOR CHECK SHALL BE FLANGED.

BURIED DUCTILE IRON PIPE SHALL BE WRAPPED WITH 8-MIL. POLYETHYLENE ENCASEMENT INSTALLED PER AWWA C105 AND INSTALLED WITH 6 INCHES SAND BEDDING AND BACKFILLED WITH SAND TO 6 INCHES ABOVE TOP OF PIPE.

Robert J. Shaw

DIRECTOR

SACRAMENTO COUNTY
PUBLIC WORKS AGENCY

FIRE PROTECTION DETAIL

SCALE: NONE
DATE: 3/99

8-7

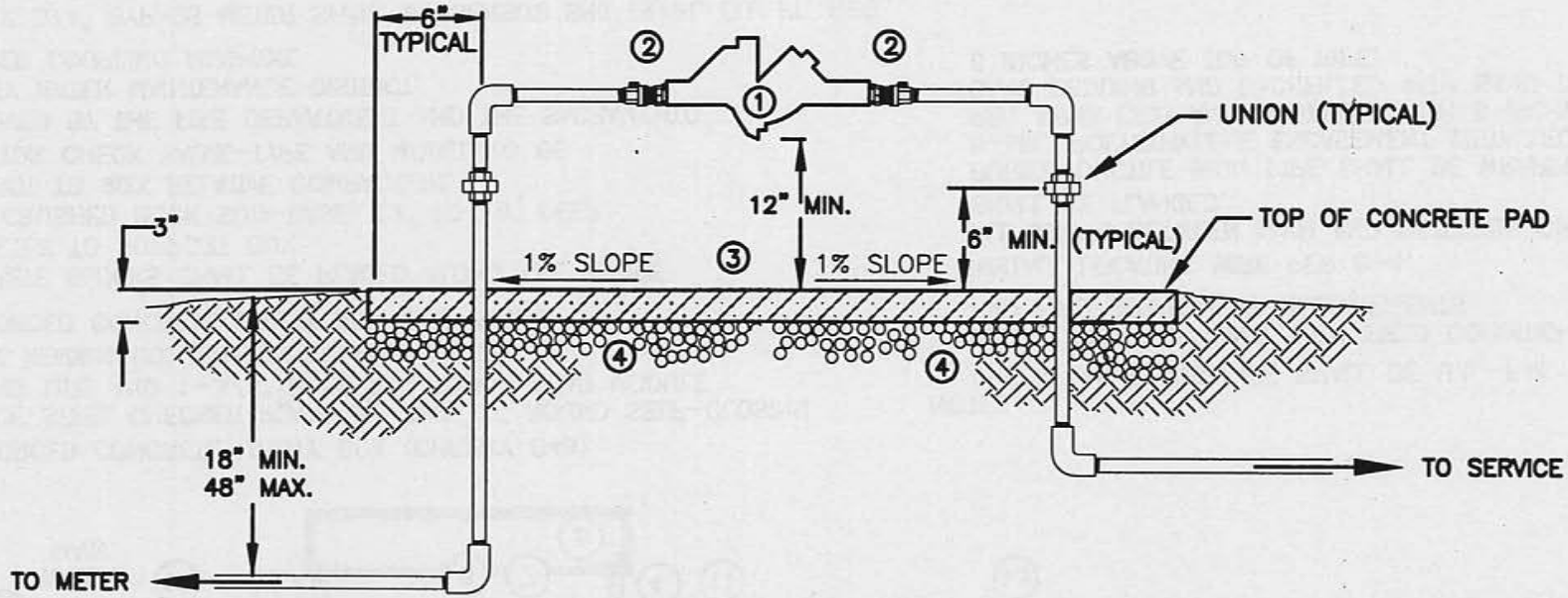

NOTES:

REDUCED PRESSURE BACKFLOW PREVENTER SHALL BE LISTED ON THE STATE OF CALIFORNIA'S DEPT. OF HEALTH SERVICES MOST RECENT LIST OF APPROVED REDUCED PRESSURE BACKFLOW PREVENTERS.

ALL PIPES SHALL BE GALVANIZED SCHEDULE 40 STEEL, TYPE K COPPER, OR BRONZE. ALL BURIED PIPES SHALL BE WRAPPED WITH 6 MIL. POLYETHYLENE ENCASEMENT OR 10 MIL POLYETHYLENE TAPE.

GALVANIZED PIPE SHALL HAVE ANODE BAG PER COUNTY BUILDING INSPECTION REQUIREMENTS CODE.

① REDUCED PRESSURE BACKFLOW PREVENTER.

② BRONZE BODY, RESILIENT SEATED BALL VALVE MINIMUM WORKING PRESSURE OF 175 PSI.

③ 3" SLAB – 18" WIDE WITH VARYING LENGTH

④ 1/2" OR 3/4" CRUSHED ROCK, 4" MINIMUM THICKNESS, MECHANICALLY COMPACTED TO 95% COMPACTION.

Robert H. Shanks
DIRECTOR

SACRAMENTO COUNTY
PUBLIC WORKS AGENCY

REDUCED PRESSURE BACKFLOW PREVENTER 1" TO 3"

SCALE: NONE
DATE: 3/99

8-8A

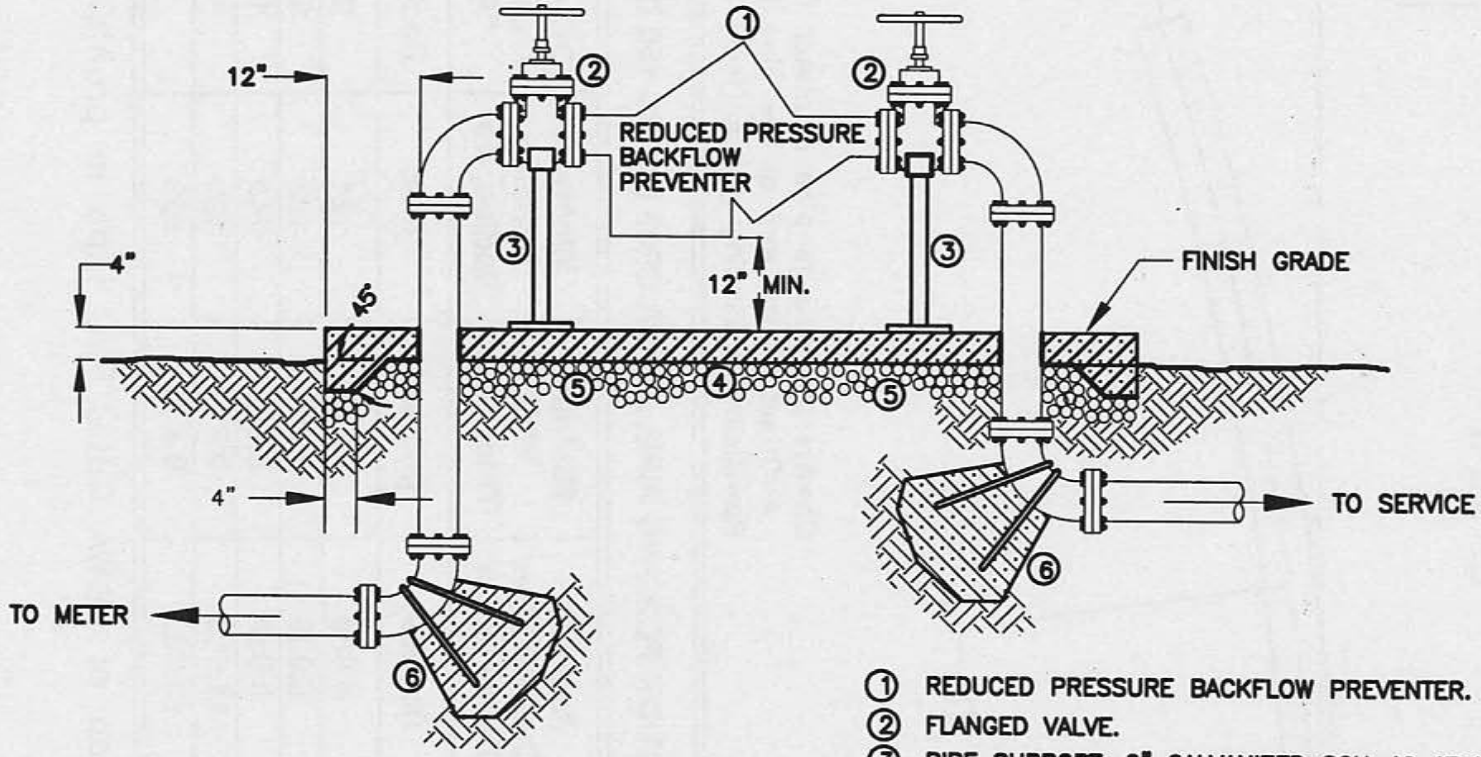

① REDUCED PRESSURE BACKFLOW PREVENTER.
② FLANGED VALVE.
③ PIPE SUPPORT, 2" GALVANIZED SCH 40 AT MINIMUM.
④ 4" CONCRETE SLAB – 24" WIDE WITH VARYING LENGTH.
⑤ 6" OF CRUSHED AGGREGATE COMPACTED TO 95% COMPACTION
⑥ THRUST BLOCK WITH #5 REBARS. WRAP THE PORTION OF THE REBAR THAT IS NOT EMBEDDED IN THE CONCRETE WITH 20 MIL POLYETHELYNE TAPE.

NOTES:

REDUCED PRESSURE BACKFLOW PREVENTER SHALL BE LISTED ON THE STATE OF CALIFORNIA'S DEPT. OF HEALTH SERVICES MOST RECENT LIST OF APPROVED REDUCED PRESSURE BACKFLOW PREVENTERS.

INSTALL LOCATING WIRE PER 8–4.

ALL PIPE SHALL BE CEMENT LINED DUCTILE IRON, CLASS 350 MEETING THE REQUIREMENTS OF AWWA C151 AND C115 ALL JOINTS SHALL BE FLANGED. FLANGES SHALL CONFORM TO AWWA C207, CLASS D REQUIREMENTS.

BURIED PIPE SHALL BE WRAPPED WITH 8 MILS OF POLYETHYLENE ENCASEMENT WITH SAND BEDDING AND BACKFILL.

Robert H. Shenk
DIRECTOR

SACRAMENTO COUNTY
PUBLIC WORKS AGENCY

REDUCED PRESSURE BACKFLOW PREVENTER 4" AND LARGER

SCALE: NONE
DATE: 3/99

8-8B

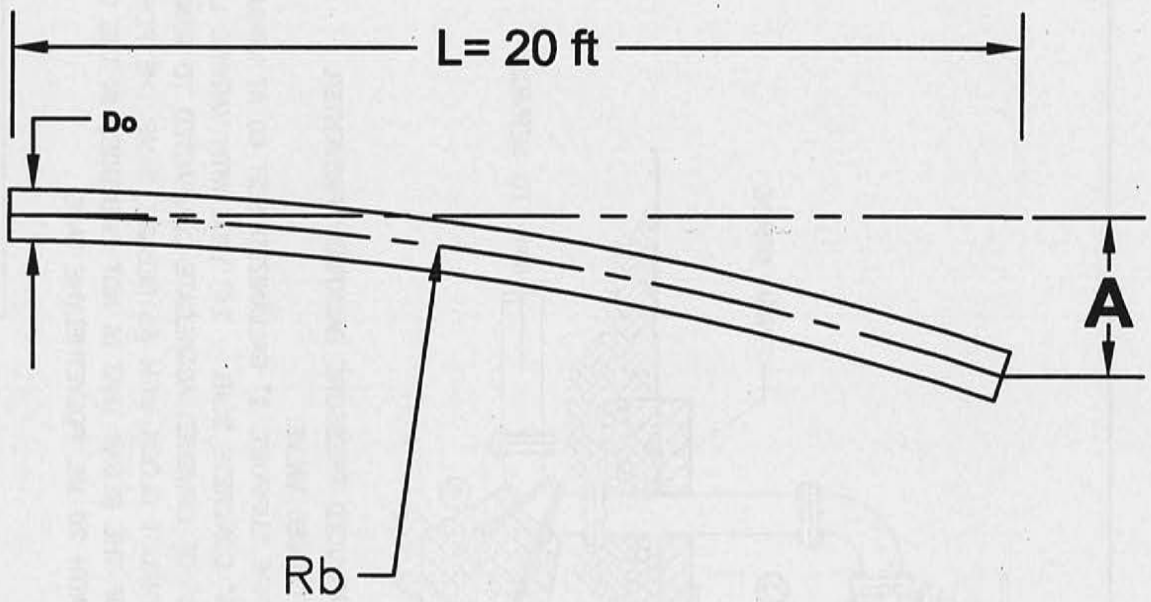

Do=Average outside pipe diameter (inches)
A=Offset at the end of the pipe (inches)
Rb=Minimum bending radius (feet)

MAX. DEFLECTION FOR PVC PIPE, AWWA C900 CLASS 150 DR 18

Nominal Pipe Diameter	Average Outside Pipe Diameter,Do	Minimum Wall Thickness	Minimum Bending Radius, Rb	Offset at Free End "A"
(inches)	(inches)	(inches)	(feet)	(inches)
4	4.800	0.267	121	20
6	6.900	0.383	185	13
8	9.050	0.503	240	10
10	11.100	0.617	400	6
12	13.200	0.733	800	4

Joint Deflection of AWWA C900 PVC Pipe is prohibited.

DIRECTOR

SACRAMENTO COUNTY
PUBLIC WORKS AGENCY

MAXIMUM DEFLECTION FOR PVC PIPE

SCALE: NONE
DATE: 3/99

8-9

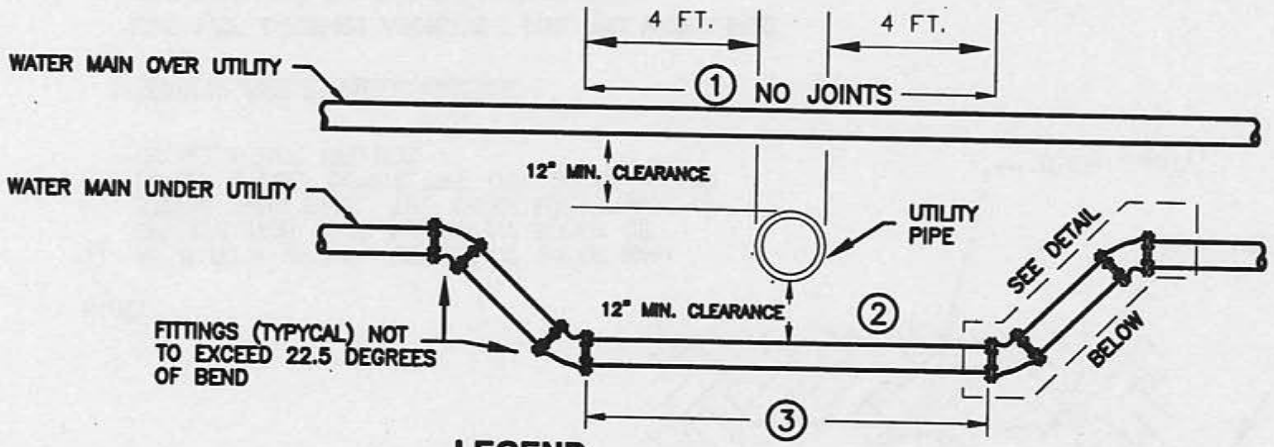

① IF UTILITY BEING CROSSED IS NOT A STORM DRAIN, SEWER, OR OTHER WATER LINE, THEN THE "NO JOINT" REQUIREMENT DOES NOT APPLY

② IF THE UTILITY BEING CROSSED IS A SEWER, STORM DRAIN OR OTHER WATER LINE, THE TYPE OF PIPE MUST BE DUCTILE IRON OR AWWA C900 DR 14 PVC PIPE

③ NO JOINTS ALLOWED IF LESS THAN 18 FEET. ALL JOINTS BETWEEN FITTINGS MUST BE RESTRAINED WITH EITHER OF THE METHODS DESCRIBED FOR DIP. BELL RESTRAINTS FOR PVC PIPE ARE NOT ALLOWED.

LEGEND

DIP= DUCTILE IRON PIPE
AWWA= AMERICAN WATER WORKS ASSOC.
PVC= POLYVINYL CHLORIDE PIPE
POJ= PUSH ON JOINTS
SCWMD= SACRAMENTO COUNTY WATER MAINTENANCE DISTRICT

NOTES

A. IF DIP IS USED, FITTINGS MAY HAVE BELL ENDS WITH U.S. PIPE FIELD LOK GASKETS FOR RESTRAINING DEVICESS OR APPROVED EQUAL BY SCWMD. BELL RESTAINTS FOR PVC PIPE ARE NOT ALLOWED.

B. IF BEND IS TO EXCEED 22.5 DEGREES, THE BEND AND THE RESTRAIN LENGTH MUST BE APPROVED BY SCWMD.

C. WRAP ALL DIP AND FITTINGS WITH 8 MIL. POLYETHYLENE ENCASEMENT IN ACCORDANCE WITH AWWA C105.

D. RESTRAINING DEVICE FOR DIP: FOR POJs, USE U.S. PIPE FIELD LOK GASKETS OR APPROVED EQUAL; FOR MJ JOINTS USE STAR PIPE PRODUCTS STARGRIP 3000, STAR PIPE PRODUCTS ALLGRIP 3600, EBAA MEGALUG 2000PV SERIES, OR APPROVED EQUAL BY SCWMD.

E. RESTRAINING DEVICE FOR PVC PIPE: USE MJ FITTINGS WITH STAR PIPE PRODUCTS ALLGRIP 3600, EBAA MEGALUG 2000PV SERIES, OR APPROVED EQUAL BY SCWMD.

F. SEE PLAN & PROFILE FOR RESTRAINED LENGTH AND DEGREE OF BEND.

G. THIS DETAIL IS FOR WATER PIPES 12" IN DIAMETER & SMALLER.

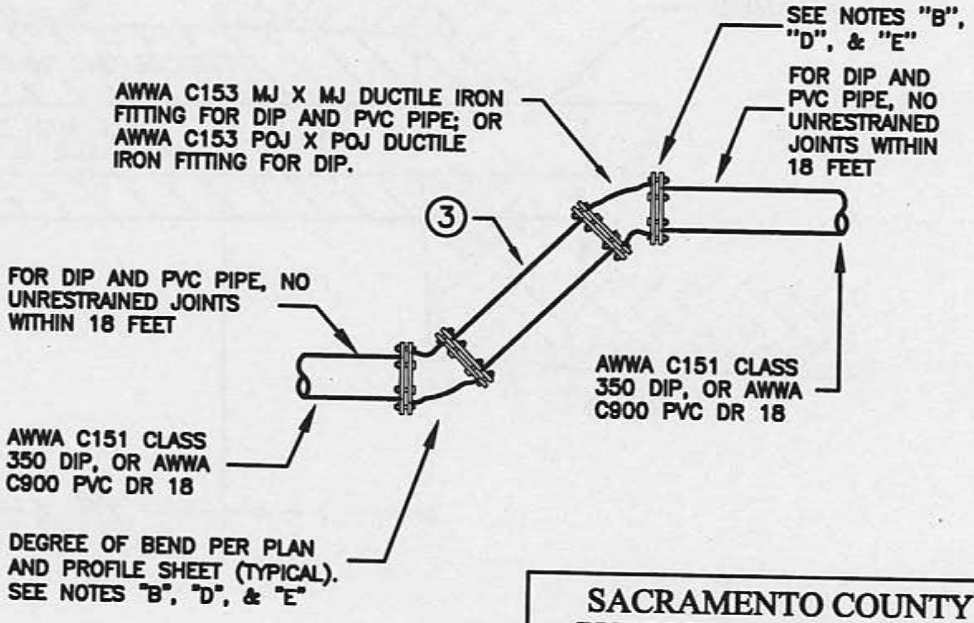

Robert D. Shanks
DIRECTOR

SACRAMENTO COUNTY PUBLIC WORKS AGENCY

UTILITY CROSSING

SCALE: NONE
DATE: 3/99

8-10

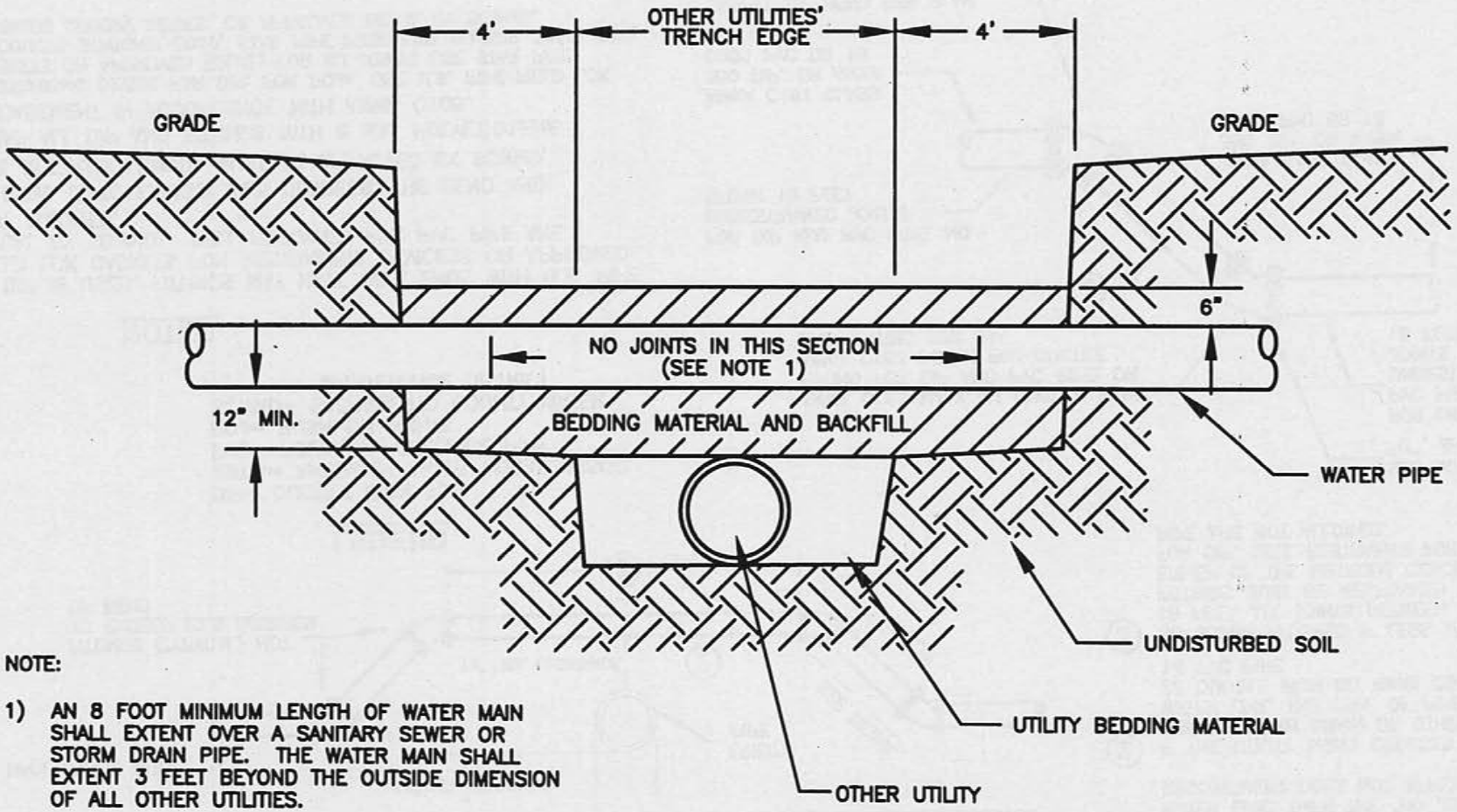

NOTE:

1) AN 8 FOOT MINIMUM LENGTH OF WATER MAIN SHALL EXTENT OVER A SANITARY SEWER OR STORM DRAIN PIPE. THE WATER MAIN SHALL EXTENT 3 FEET BEYOND THE OUTSIDE DIMENSION OF ALL OTHER UTILITIES.

BEDDING AND BACKFILL MATERIAL

USE 1/2" CRUSHED AGGREGATE FOR PVC WATER PIPE
USE SAND FOR DUCTILE IRON WATER PIPE
COMPACT BEDDING AND BACKFILL MATERIAL
TO 90% RELATIVE COMPACTION

Robert F. Shank
DIRECTOR

SACRAMENTO COUNTY
PUBLIC WORKS AGENCY

UTILITY CROSSING UNDER EXISTING WATER MAIN

SCALE: NONE
DATE: 3/99

8-11

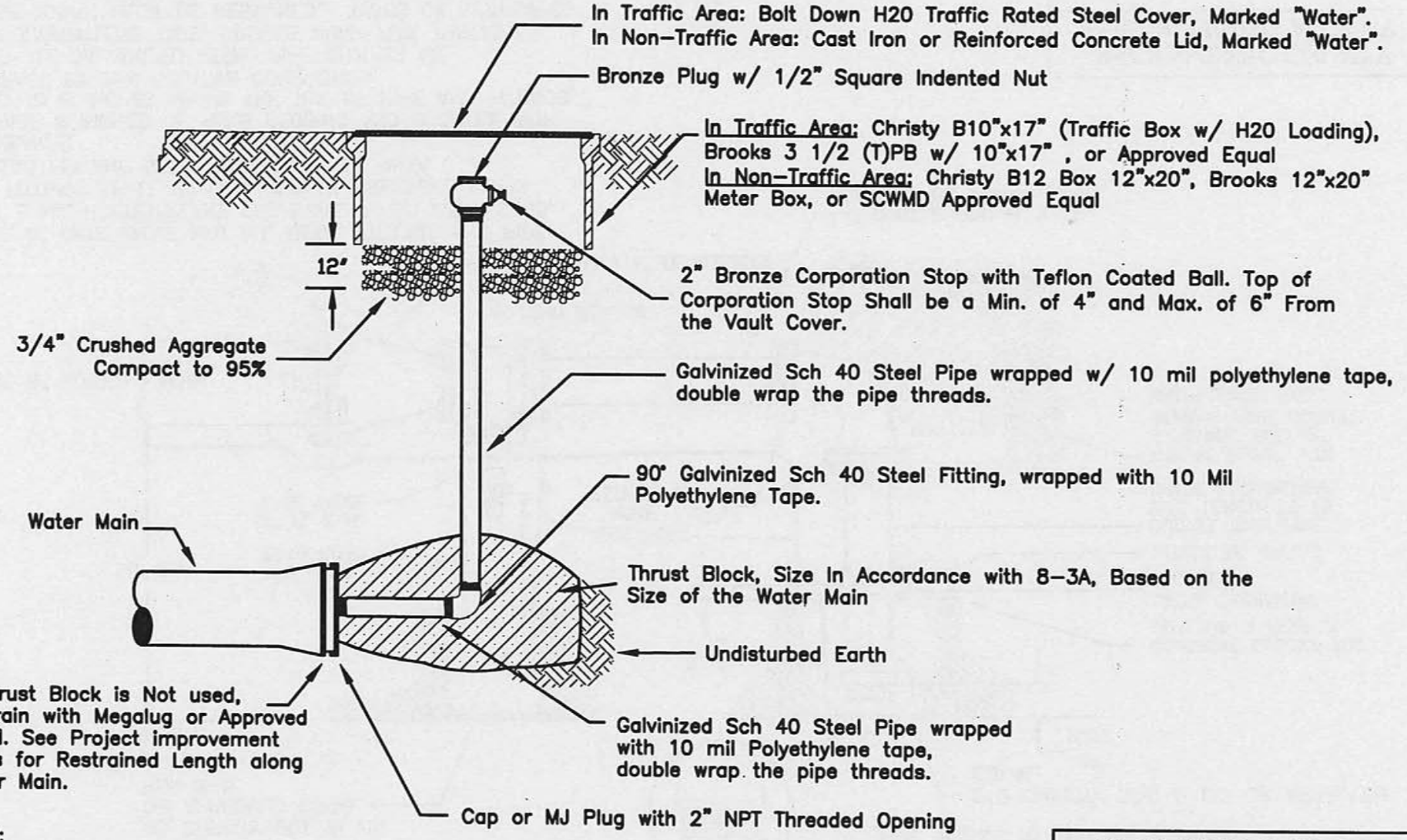

NOTE:
Backfill with Native Material and Compact to 80% Compaction. In traffic areas the backfill and compaction requirements for the road shall govern.

DIRECTOR

SACRAMENTO COUNTY
PUBLIC WORKS AGENCY

2" TEMPORARY BLOW OFF ASSEMBLY

SCALE: NONE
DATE: 3/99

8-12

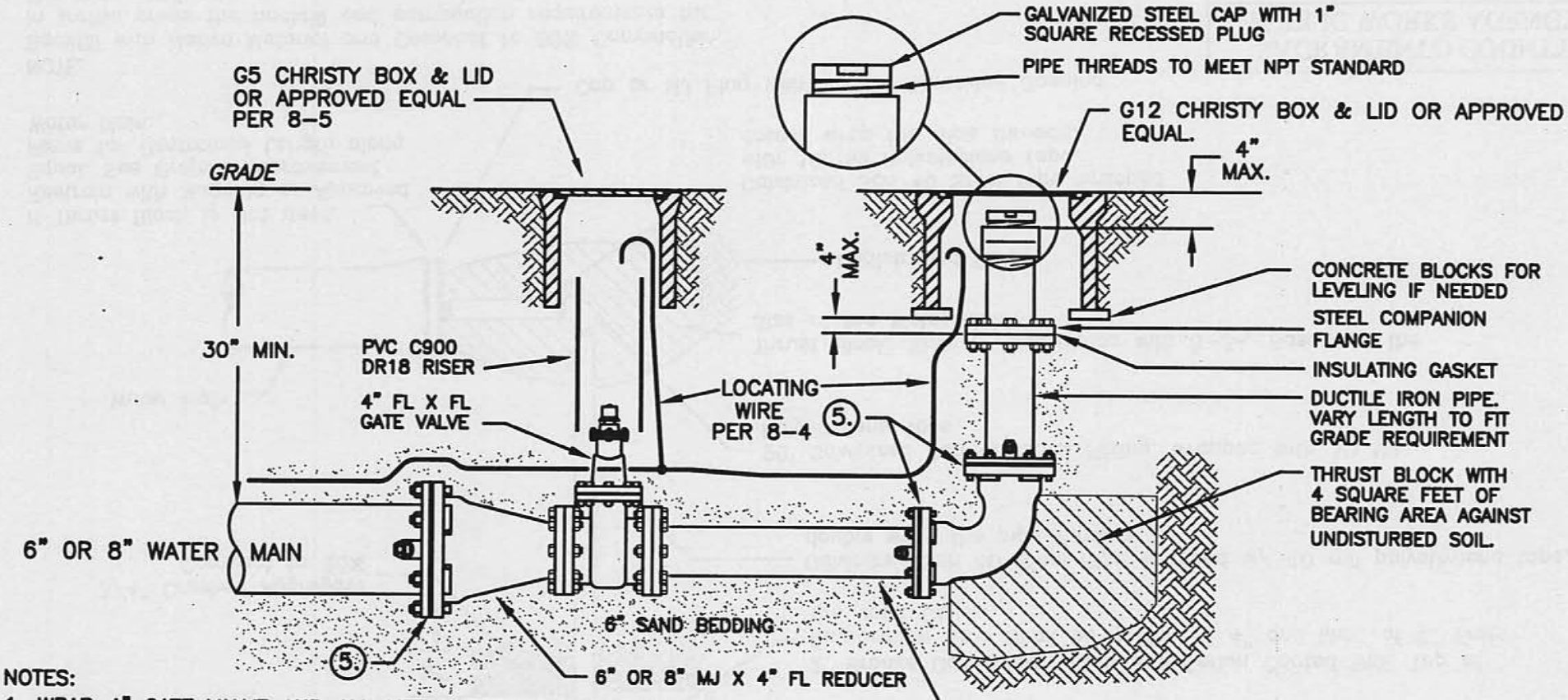

NOTES:

1. WRAP 4" GATE VALVE AND ALL METAL FITTINGS AND PIPE WITH 8 MIL POLYETHYLENE ENCASEMENT PER AWWA C105.
2. ALL FITTINGS SHALL HAVE A MINIMUM PRESSURE CLASS OF 200 PSI AND MEET AWWA C110 OR AWWA C153 STANDARDS.
3. PROVIDE 6 INCHES OF SAND BEDDING AND BACKFILL WITH SAND TO 6 INCHES ABOVE THE TOP OF PIPE AND FITTINGS, COMPACT TO 90% RELATIVE COMPACTION.
4. WRAP ALL GALVANIZED STEEL PIPE WITH 20 MIL OF POLYETHYLENE TAPE; DOUBLE WRAP PIPE THREADS.
5. THESE JOINTS MUST BE RESTAINED. TYPES OF RESTRAINED JOINTS MAY BE: (1) FLANGE, (2) MJ WITH SCWMD APPROVED RESTAINING DEVICES (EBAA OR STAR PIPE PRODUCTS), OR (3) FOR D.I.P., PUSH ON JOINTS WITH U.S. PIPE FIELD-LOK GASKET OR SCWMD APPROVED EQUAL.

Robert J. Shenk
DIRECTOR

SACRAMENTO COUNTY
PUBLIC WORKS AGENCY

4" BLOW OFF ASSEMBLY AT END OF MAIN

SCALE: NONE
DATE: 3/99

8-13

3/16" steel, 6" x 6" rectangular tube 18" high with an 8-1/2" cap, spot welded at the top. Clean interior and exterior of steel with a water based cleaner, Devprep 88 or equal. Factory apply 1 coat, at 2.0 mils, of Tnemec series 135 epoxy primer, then 1 coat, at 2.0 mils of Tnemec series 28 acrylic to the cap, tube, & top of the lid of the utility box. Color to be Hunter Green or approved equal by SCWMD.

2-3/8" Bolts, Grade 3 with washer.

1/4" thick steel lid. Tack weld 1/4" thick by 1" wide steel plate around perimeter of lid so top of lid is flush w/ top of box. Cut 5"x5" square hole in top of lid. Square hole to be centered relative to width of lid. Lid & tube assembly shall be PWAE118M by Placer Waterworks or approved equal by SCWMD. Lid shall be bolted to box.

Weld 2 locking nuts to lid to accept bolts.

1" schedule 40 Galvanized steel pipe w/steel threaded coupling and 1" to 3/4" PVC adapter. Operator must be able to unscrew PVC Riser from coupling.

1" Crispin UL-10 Combination Air Release/Vacuum Valve or SCWMD Approved Equal

1"- 90° bronze fitting (Typ)

1"- bronze nipple (Typ)

1 1/4" x 1" Bronze threaded union

Copper pipe (0.182" wall thickness) per AWWA C800 w/ plastic encasement; maintain upward grade from corp. stop to Air/Vacuum Combination valve

1" bronze corp. stop

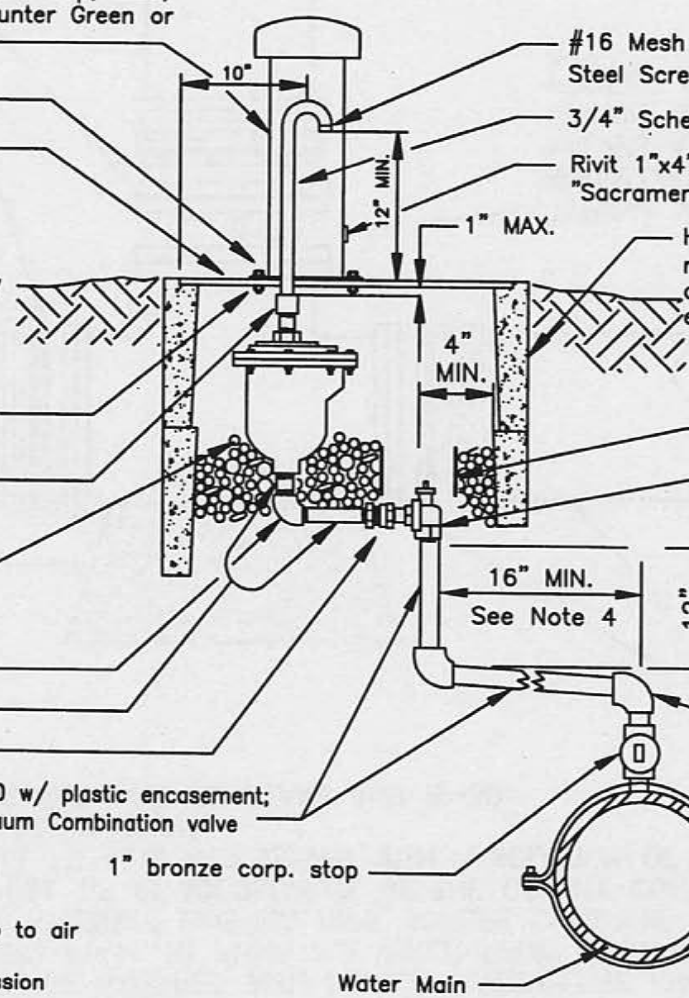

#16 Mesh Bronze or Stainless Steel Screen

3/4" Schedule 40 PVC

Rivit 1"x4" silver colored name plate that reads "Sacramento County Water" to tubing.

H20 Traffic rated box to accept bolt down H20 rated metal lid. Box shall have a 13" x 24" inside dimension as made by Christy, Brooks or approved equal.

6" Diameter PVC Sleeve

1" Bronze angled curb stop ball valve type: Jones or approved equal by SCWMD.

Backfill W/ sand to 12 inches above pipe and place warning tape 12 inches above pipe

1"- 90° copper fitting (typical)

Bronze service saddle and bolts, wrap w/ 8 mil polyethylene encasement

Notes:

1. Maintain a grade upward from corp. stop to air valve.
2. Flare or solder joint fittings and compression fittings are acceptable.
3. Provide 3'x3'x3' of 1/2" crushed aggregate for drainage and support under valve, compact to 95%.
4. See plan and profile sheets for location of valve box and air vent
5. Detail not for use in roadways.

Robert F. Shaw

DIRECTOR

SACRAMENTO COUNTY PUBLIC WORKS AGENCY

COMBINATION AIR / VACUUM VALVE

SCALE: NONE

DATE: 3/99

8-14

NOTES:
1. TEE AND MJ X FLANGE ADAPTER SHALL BE WRAPPED WITH 8 MIL POLYETHYLENE ENCASEMENT
2. DIG SUMP UNDER CUT IN LOCATION AND PUMP TO PUMP ALL WATER FROM EXISTING MAIN AWAY FROM CUT IN LOCATION. DO NO ALLOW ANY WATER TO ENTER EXISTING PIPE. ADHERE CHLORINE TABLETS TO TEE OR CROSS, THE NUMBER OF TABLETS SHALL BE IN ACCORDANCE OF THE COUNTY CONSTRUCTION STANDARDS. SPRAY EXISTING PIPE, ALL FITTINGS AND VALVES WITH A SOLUTION OF SUPER CHLORINATED WATER JUST PRIOR TO INSTALLATION.
3. PROVIDE RESTRAINT OF PIPE JOIINT AS REQUIRED BY PLANS AND 8-3B.

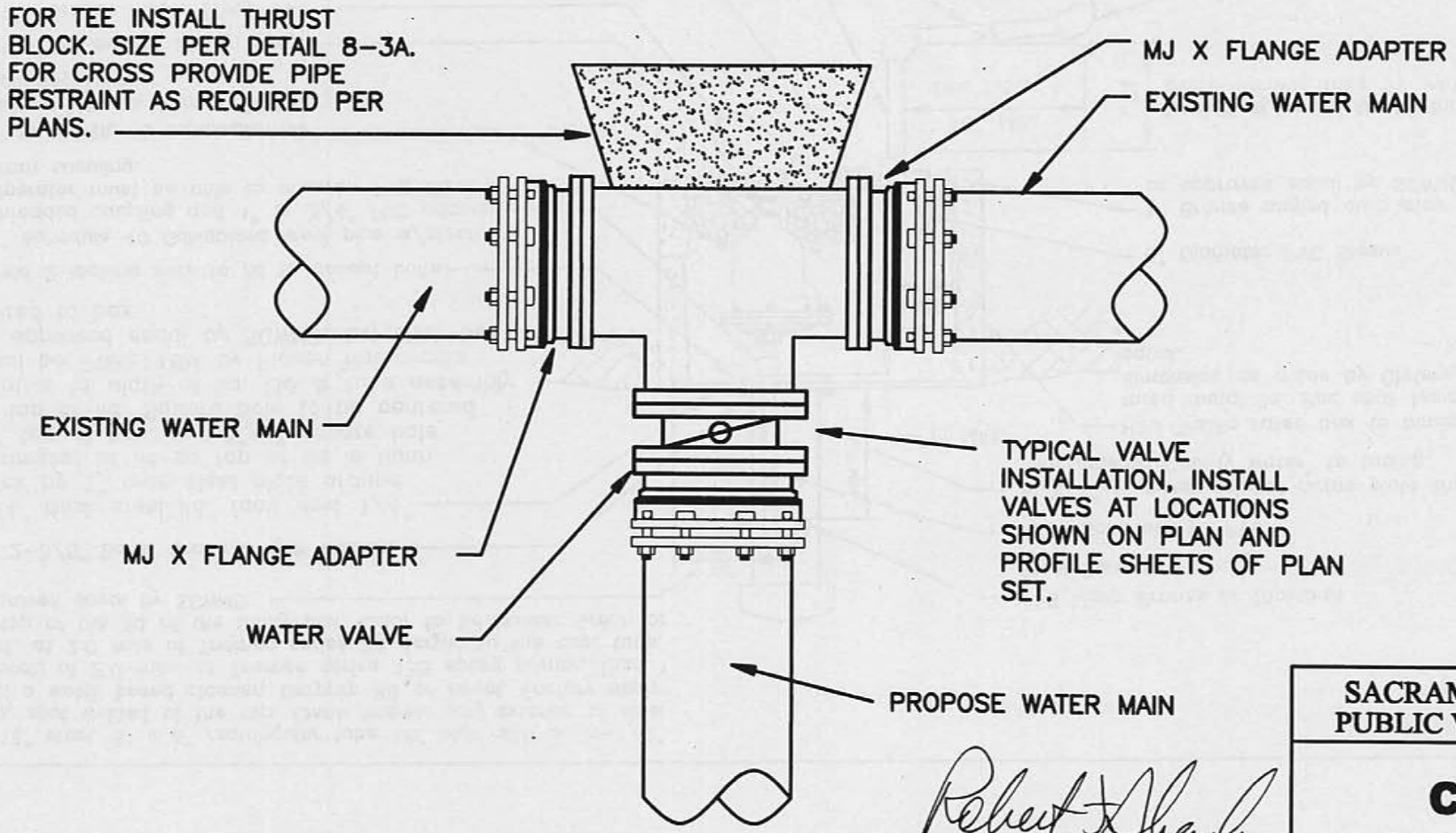

Robert K. Shenk
DIRECTOR

SACRAMENTO COUNTY
PUBLIC WORKS AGENCY

CUT IN

SCALE: NONE
DATE: 3/99

8-15

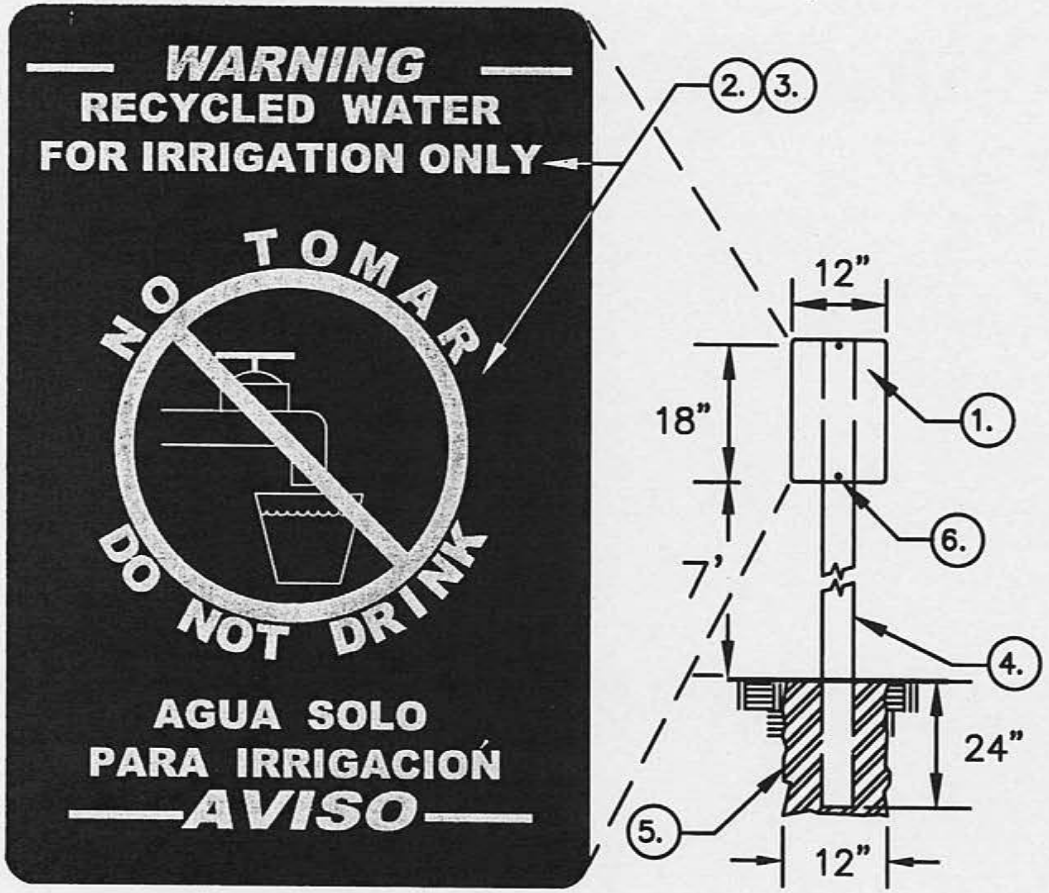

SIGN, LETTER HEIGHTS, & SYMBOL SIZE SHOWN ARE IN REQUIRED PROPORTIONS

NOTES:

1. 12"x 18" ALUMINUM SHEET ALLOY 6061–T6 0.080" GAUGE, ROUNDED CORNERS (1" RADIUS).
2. LETTER HEIGHT & SYMBOL SIZE SHALL BE PROPORTIONAL TO SIGN SIZE.
3. LETTER & SYMBOL SHALL BE WHITE IN COLOR. THE BACKGROUND SHALL BE PURPLE (PANTONE 241) IN COLOR.
4. 4"x4" POST. SHALL BE REDWOOD OR TREATED DOUGLAS FIR(STATE OF CALIF. SPEC. NO. 56–2.02B).
5. FOOTING SHALL BE 24" IN DEPTH WITH COMPACTED EARTH IN 4" LIFTS OR CONCRETE.
6. 5/16"ø x 4–1/2" ZINC PLATED STEEL BOLT WITH VANDAL PROOF NUTS.

ALL SIGNS SHALL CONFORM TO THE LATEST COUNTY OF SACRAMENTO STANDARD CONSTRUCTION SPECIFICATIONS SECTIONS SS104–03 AND SS104–04. A DIRECT OR PRESSURE SENSITIVE DECAL INK SCREENING PROCESS REQUIRED.

3" x 4–1/2" PRESSURE SENSITIVE DECALS ARE REQUIRED FOR IRRIGATION CONTROLLERS AND OTHER ABOVE GROUND FACILITIES REQUIRING A WARNING SIGN. WHEN CONDITIONS AND/OR FACILITY CHARACTERISTICS RENDER THESE SPECIFICATIONS INAPPROPRIATE, ALTERNATIVE SIGNING MUST BE SUBMITTED FOR REVIEW AND APPROVAL BY THE SACRAMENTO COUNTY WATER MAINTENANCE DISTRICT.

Robert K. Thomas
DIRECTOR

SACRAMENTO COUNTY
PUBLIC WORKS AGENCY

NONPOTABLE RECYCLED WATER WARNING SIGN

SCALE: NONE
DATE: 3/99

8-16

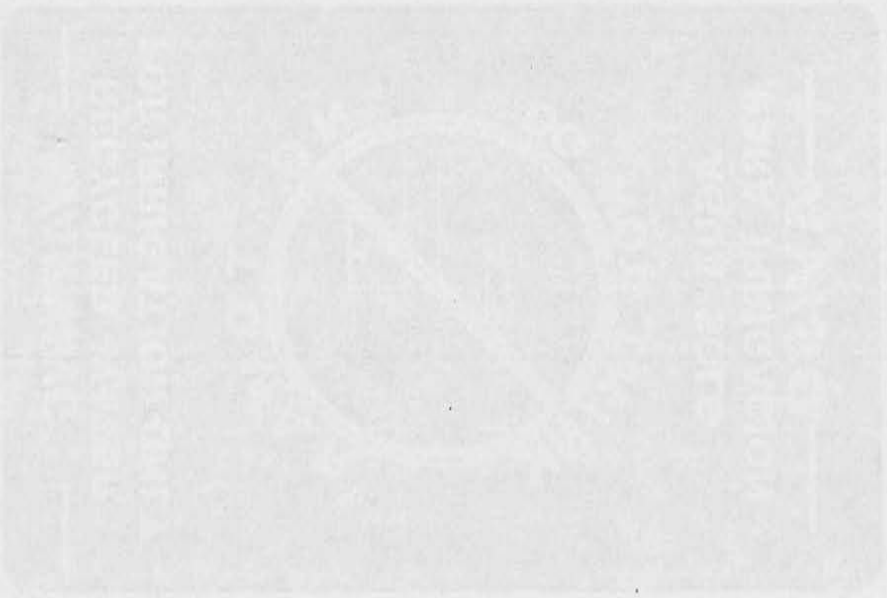

SECTION 9

STORM DRAINAGE DESIGN

TABLE OF CONTENTS

Section **Page**

9-1 COUNTY POLICY AND REQUIREMENTS 3

9-2 STORMWATER UTILITY 3

9-3 DEFINITIONS 4

9-4 FEDERAL FLOOD PROGRAM 4

9-5 DRAINAGE FEES AND CREDITS 4

9-6 DRAINAGE DIVERSIONS 5

9-7 DRAINAGE EASEMENTS 5

9-8 DRAINAGE CAPACITY/DESIGN 6

9-9 DESIGN COMPUTATION 6

9-10 DESIGN RUNOFF 7

A. UNDER 160 ACRES 7
B. 160 TO 640 ACRES 8
C. OVER 640 ACRES 8

9-11 HYDRAULICS 8

A. HYDRAULIC GRADE LINE 8
B. HYDRAULIC GRADIENT 8
i. Friction Losses 9
ii. Velocity Head Losses 10
(1) Entrance Losses 10
(2) Manhole and Junction Losses 10
(a) Straight Through Manhole 11
(b) Incoming Opposing Flows 11
(c) Changes in Direction of Flow 11
(d) Several Entering Flows 13
(3) Bend Loss 15
(4) Trashrack Head Loss 16

9-12 CLOSED CONDUITS 16

A. MATERIAL 16
i. Reinforced Concrete Pipe 16
ii. Concrete Cast-In-Place-Pipe 16
iii. Polyvinyl Chloride Pipe 17
iv. High Density Polyethylene Pipe 17
v. Metal Pipe 18
B. COVER REQUIREMENTS 18
i. Minimum Cover 18
ii. Maximum Cover 19
iii. Temporary Construction Vehicle Loading 21
C. TRENCH REQUIREMENTS 21

D. SPACING REQUIREMENTS 21
E. ALIGNMENT REQUIREMENTS 21
F. VELOCITY 22
G. ENTRANCES AND EXITS 22
H. WATER AND SOIL TIGHT SYSTEM 22
I. BORES AND JACKED PIPE 23

9-13 MANHOLES 23

9-14 JUNCTION BOXES 24

9-15 INLETS 25

9-16 PIPE STUBS 26

9-17 HEADWALLS, WINGWALLS, ENDWALLS, TRASH RACKS, ACCESS CONTROL RACKS AND RAILINGS 27

9-18 DRAINAGE PUMPS 27

9-19 DETENTION SYSTEMS 27

9-20 OPEN CHANNELS 27

9-21 OUTFALL DESIGN 29

9-22 FENCING REQUIREMENTS 29

9-23 CROSS CULVERT CRITERIA 30

9-24 DRAINAGE ALONG CLASS "C" STREETS 30

9-25 CLASS "C" SUBDIVISIONS 30

LIST OF DRAWINGS 31

SECTION 9

STORM DRAINAGE DESIGN

9-1 COUNTY POLICY AND REQUIREMENTS

A. The planning, design and construction of drainage facilities and other related appurtenances to be owned, operated and maintained by the County of Sacramento shall comply with these standards herein referred to as the "Storm Drainage Design Standards".

B. In addition to these Storm Drainage Design Standards, other specific requirements for the improvement and construction of drainage facilities are set forth in the Sacramento County Water Agency Drainage Ordinance, the County of Sacramento Standard Construction Specifications, the Sacramento City/County Drainage Manual and the Sacramento County Code.

C. All submitted plans shall be signed by a registered Civil Engineer prior to submission for plan review and all work shall be in accordance with these design standards and good engineering practice.

D. The Director shall decide all questions of interpretation of "good engineering practice," guided by the standards and manuals of the discipline in question.

E. All drainage facilities shall be located within the County's rights-of-way unless otherwise approved by the Director. Adequate access for maintenance of the system shall be provided.

F. All new habitable structures shall be protected from the 100-year (1-%) flood event and all public roads are protected from the design flood event. Definition of the design flood event is found in the Sacramento City/County Drainage Manual.

G. Finished floor elevations shall be set at least one foot (1') above the hydraulic grade line, as projected from the ultimate future 100-year hydraulic grade line of the channel into which a gravity storm drain system sized for a design storm will discharge.

H. The design of a new storm drain system shall include consideration of the downstream creek or storm drain. The Consulting Engineer shall show that the existing storm water system can convey the proposed drainage without adverse upstream, downstream or adjacent impacts or that the upstream, downstream or adjacent facilities are being improved to the point where they can.

9-2 STORMWATER UTILITY

Sacramento County maintains public drainage facilities within the Sacramento County Stormwater Utility service area. New development in areas outside the existing Sacramento County Stormwater Utility service area will be required to annex or form a benefit assessment district for storm drain maintenance as required by the Director.

9-3 DEFINITIONS

The following terms, abbreviations or definitions shall apply and the intent and meaning shall be interpreted as stated herein wherever they are encountered in these standards or in any documents or instruments referenced by these standards unless otherwise approved by the Director.

A.	ASTM	American Society for Testing and Materials.
B.	FEMA	Federal Emergency Management Agency.
C.	Trunk Drainage	Mainline drainage from an area over 30 acres.
D.	Credit Letters	An agreement between the county and developer identifying eligible reimbursement costs.
E.	Right-of-Way	A strip of land dedicated, condemned or reserved for public use.
F.	Drainage Easement	A strip of land dedicated, condemned or reserved for drainage use.
G.	Temporary	Not permanent
H.	Overland Release Path	An alignment that allows the passage of floodwater through a development without damaging structures.
I.	SACPRE	Software for developing runoff flows.

9-4 FEDERAL FLOOD PROGRAM

A. The County of Sacramento is a participant in the National Flood Insurance Program and all development in the County shall comply with the regulations of the Federal Emergency Management Agency (FEMA). Amendments of FEMA flood maps will be required for all commercial and subdivision development located in a federal flood zone. Petitions for a Conditional Letter of Map Amendment (CLOMA) or Conditional Letter of Map Revision (CLOMR), including any fee required by FEMA, shall be submitted to the Water Resources Division before improvement plans are approved. These regulations do not preclude the County from requiring additional standards to protect the public from a projected runoff.

B. Fill for the removal of land from the FEMA 100-year floodplain of a watercourse where building pads will be created must be compacted to 95 percent (95%) of the maximum density obtainable with the standard proctor test method (ASTM Standard D-698) or an equivalent test method acceptable to FEMA.

9-5 DRAINAGE FEES AND CREDITS

All development in Zones 11A, 11B and 11C and all future subzones of the Sacramento County Water Agency is conditioned upon payment of a drainage fee. The Sacramento County Water Agency administers said fees for the construction of trunk drainage systems. The Sacramento County Water Agency will reimburse second parties for the construction of trunk drains according to a predetermined credit schedule where the County requires such work. The fee and credit schedule is shown in the Agency Ordinance and is revised annually. Approved credit letters shall be obtained before approval of improvement plans.

9-6 DRAINAGE DIVERSIONS

A. The diversion of natural drainage is allowable only within the limits of the proposed improvement. All drainage must enter and leave the improved area at its original horizontal and vertical alignment unless an agreement, approved by the Director, has been executed with the adjoining property owners or drainage is being discharged into a County right-of-way or intended for said drainage easement.

B. Temporary drainage diversions during construction may be approved by the Director and shall be located and constructed in such a fashion as to permit their removal when necessary for the prevention of damage to adjoining properties.

9-7 DRAINAGE EASEMENTS

A. In unusual circumstances, where the Director or designee has given prior approval, County storm drain facilities may be placed in easements. Such easements must be wide enough to accommodate normal construction equipment and shall be easily accessible to such equipment as necessary to construct, operate and maintain the facility. The easement shall be offered to the County of Sacramento.

B. Where improvements fall on adjacent property (such as daylighting ditch profiles) written permission from the adjacent property owner(s) for such construction shall be required. A copy of the documents, which grant such approval, shall be submitted to the Director or designee before the approval of the improvement plans.

C. In the event necessary permanent offsite easements cannot be acquired through negotiation, the County will condemn necessary rights-of-way providing the person, firm, or corporation requesting such condemnation enters into a written agreement to pay all costs and expenses of the condemnation. The agreement shall require a cash deposit that will consist of the estimated cost of condemnation plus 25%. It shall require payment of all costs and expenses of the deposit as specified by the County. Any unspent funds will be returned.

D. Acquisition and maintenance of temporary construction easements outside of the limits of the subdivision shall be the subdividers responsibility.

E. Easements for closed conduits shall meet the following width criteria:
   1. All easements for closed conduits shall have a minimum width equal to the greater of fifteen feet (15') or the required trench width according to the standard detail for pipe bedding and initial backfill (DWG. 9-1) plus two feet (2') of additional width for every foot of depth as measured from the bottom of the pipe to finished grade. Exceptions to the minimum width require approval by the Director.
   2. All conduits shall be centered within their easements.
   3. Drainage easements for open channels shall have sufficient width to contain the ultimate channel, fencing where required and a twenty-foot (20') service road with drainage ditch. Additional width shall be provided to allow equipment to safely negotiate the service road for the purposes of construction, operations and maintenance activities.
   4. Easements shall not be split along property lines unless otherwise approved by the Director.

9-8 DRAINAGE CAPACITY/DESIGN

A. All drainage systems shall be designed to accommodate the ultimate development of the entire upstream watershed. The design storm shall be used in the design of closed conduit drainage systems. All open channel drainage systems shall be designed to carry the 100-year frequency design storm with freeboard. Freeboard requirements shall be determined by the Water Resources Division on a plan-by-plan basis.

B. The Consulting Engineer shall design an overland release path and show its incorporation in the grading plan which insures that the 100-year design storm flows through the proposed development to prevent flooding to existing and proposed structures in the event of malfunction or overloading of the drainage system. The overland release path shall be designed and constructed in a manner to transport the peak rate of runoff from the 100-year frequency storm falling on fully developed and saturated tributary watershed. Streets, parking lots, playgrounds, pedestrian areas, pedestrian walkways, utility easements and other open space areas may be considered compatible uses with the overland release.

9-9 DESIGN COMPUTATION

The design computations for drainage shall include the following information that shall be submitted before the plans will be accepted for checking:

A. Topographic map showing existing and proposed ground elevations that show on-site and off-site watershed boundaries draining onto the site. It shall also include total and sub-shed areas in acres.
B. Quantity of flow (cfs) to each structure with corresponding area and land uses that generates the quantity.
C. Quantity of flow (cfs) in each pipe.
D. Flow line elevation of manhole or structure.
E. Top of structure elevation.
F. Hydraulic grade line elevation at each structure.
G. Hydraulic gradient
H. Pipe size, type, class, length and gradient.
I. Channel dimensions, flow and water surface profile computations.
J. High Density 3.5" diskettes with all computer input files used for analysis and design or other acceptable electronic media.

9-10 DESIGN RUNOFF

Use of three design methods, Nolte, Sacramento and Sato for runoff calculations in the County of Sacramento are described in Volume 2 of the City/County Drainage Manual, Hydrology Standards. Other methods may be used upon approval of Water Resources Division. The required design methods, their appropriate applications and design tools provided are summarized in Table 9-1.

Table 9-1 – Minimum Design Methods

Application	Basin Size	Hydrologic Calculation	Method	Design Tools
Design of: · street drainage · storm sewers · culverts	<640 ac	Flow	Nolte	Design Charts
Special Case Design of: · street drainage · storm sewers · culverts	<640 ac	Flow	Sacramento	Design Charts, HEC-1 and SACPRE
Master Plans Design of: · open channels · bridges · detention facilities	No limit	Flow and Volume	Sacramento	HEC-1and SACPRE
Water Quality Detention Basins	<640 ac	Volume	Sato	Design Chart

A. Under 160 acres

i. The runoff used in storm drainage design for drainage area 160 acres and smaller shall be computed from the Drainage Zone chart and the accompanying Design Runoff graphs shown on Standard Drawings 9-2, 9-3, 9-4 and 9-5. The selection of the appropriate chart will be based on the County General Plan.

ii. In drainage areas that contain multiple zoning, the runoff shall be computed from the following formula:

$$Q_{Design} = Q + (Q_m - Q_r)\, A_m/A_t + (Q_c - Q_r)\, A_c/A_t$$

Where: Q_r=Flow from residential curve using total area of watershed.
Q_m=Flow from Multiple Family formula using total area of watershed.
Q_c=Flow from commercial curve using total area of watershed.
A_m=Area of Multiple family zoning.
A_c=Area of Commercial zoning.
A_t=Area in total.

iii. Residential runoff curves shall be used for those areas zoned AR-2 to RD-5, inclusive. Multiple family runoff shall be computed for those areas zoned RD-7 to RD-30, inclusive. Commercial runoff curves shall be used for those areas zoned RD-40, industrial and commercial uses.

iv. At sag points where the total change in grade exceeds 4% within 200 feet of a drop inlet the design Q at that inlet shall be increased to 0.7 cfs/acre.

B. 160 to 640 acres

The runoff to be used in drainage design for watersheds between 160 and 640 acres shall be taken from Figures 2-8 to 2-10 in the Hydrology Standards.

C. Over 640 acres

The Sacramento method shall be used for watersheds greater than 640 acres.

9-11 HYDRAULICS

A flapgate shall be installed in all laterals outletting into a mainline stormdrain whenever the water surface level of the main line is higher than the surrounding area drained by the lateral. The flapgate must be set back from the main line drain so that it will open freely and not interfere with the main line flow. A junction structure shall be constructed for this purpose.

A. Hydraulic Grade Line

i. Hydraulic grade line calculations shall begin at the ultimate future 100-year channel water surface elevation for new pipe systems outfalling to a channel. For the design storm, the hydraulic grade line shall be a minimum one-half foot (1/2') below the elevation of all inlet grates and manhole covers. The hydraulic grade line shall be shown on the plans wherever the hydraulic grade line is above the soffit of the pipe.

ii. A note shall be made on the plans indicating stationing where the hydraulic grade line is below the soffit of the pipe.

iii. For open channel systems, the hydraulic grade line shall be shown for the design storm and 100-year flood events.

iv. In adjacent unimproved areas with no available development plans, the future gutter flow line is assumed one and one-half feet (1.5') lower than the natural ground elevation.

B. Hydraulic Gradient

In order to analyze the drainage system to determine if design flows can be accommodated without causing flooding at some locations or causing flows to exit the system at locations where this is unacceptable, the consulting engineer shall analyze the hydraulic gradient. Following are the equations and charts needed for manual calculation of the location of the hydraulic gradient.

The Mannings Formula shall be used to compute capacities of all open and closed conduits other than driveway- and cross-culverts.

i. Method 1 Friction Losses

Friction losses can be calculated two ways. These methods cannot be interchanged for design of the pipe system. One method shall be used throughout the analysis. The first method uses a conservative Manning's "n" value to account for minor losses.

The Manning's formula shall be used to compute capacities of all open and closed conduits and all cross culverts which will become a part of the closed conduit system.

The minimum 'n' values to be used in the Manning's formula shall conform to the following:

Precast Concrete Pipe	0.015
High Density Polyethylene Pipe	0.015
Polyvinylchloride Pipe	0.015
Concrete Box Culvert	0.016
Ribbed Metal Pipe	0.015
Concrete Cast-In-Place Pipe	0.015
Open Channel Fully Lined	0.018
Corrugated Metal Pipe 2-2/3" x ½" Corrugations	0.024
Corrugated Metal Pipe 3" x 1" or 5" x 1" Corrugations	0.028
Open Channel with Lined Bottom, Clean Sides	0.030
Earth Channel, Clean, Uniform Sides	0.035
Natural Channel	0.060 or as specified

Using Method 1 does not require the analysis of other minor losses except for Trashrack Head Loss identified in 9-11.b.2.d.4. Pipes that are designed with inlet control shall account for losses associated with inlet control.

ii. Method 2 – Minor losses

Energy losses from pipe friction shall be determined by the following:

$$S_f = [Qn/1.486\ AR^{2/3}]^2$$

Where:

S_f = friction slope, ft/ft
Q= flow rate, ft^3/s
n= Mannings coefficient
A= area, ft^2
R= hydraulic radius

The head loss due to friction is determined by the formula:

$$H_f = S_f L$$

Where:

H_f = friction head loss, ft
L = length of outflow pipe, ft

The minimum "n" value used in Mannings formula shall conform to the following:

Precast Concrete Pipe	0.012
High Density Polyethylene Pipe	0.012
Polyvinylchloride Pipe	0.012
Concrete Box Culvert	0.013
Ribbed Metal Pipe	0.013
Concrete Cast-In-Place Pipe	0.014
Pavement Surfaces	0.016
Open Channel Fully Lined	0.018
Corrugated Metal Pipe 2-2/3" x ½" Corrugations	0.024
Corrugated Metal Pipe 3" x 1" or 5" x 1" Corrugations	0.028
Open Channel with Lined Bottom, Clean Sides	0.030
Earth Channel, Clean, Uniform Sides	0.035
Natural Channel	0.060 or as specified

Velocity Head Losses

Analysis methods must account for all minor losses. Overly compensating for minor losses by increasing the friction loss for the pipe material shall not be allowed.

Minor head loss is usually written as:

$$H_L = K_c (V^2/2g)$$

Where:

H_L is the minor head loss

K_c is a loss coefficient dependent on the type of loss

$V^2/2g$ is the velocity head

The loss coefficient and the form of the equation are different depending on the type of loss, whether flow is open channel or pressure flow, and at times, whether flow is subcritical or supercritical. Full discussion and values of coefficients are given in several references (Chow *Open Channel Hydraulics*; Brater and King *Handbook of Hydraulics*; Rouse *Fluid Mechanics for Hydraulic Engineers*; Hendrickson *Hydraulics of Culverts*). The following are minor head loss formulas for hydraulic structures commonly found in storm drain systems and open channels.

(1) Entrance Losses

Entrance losses to box culverts and pipes of various materials can be estimated by using the entrance loss coefficients listed in Table 9-2 in conjunction with the minor head loss equation.

(2) Manhole and Junction Losses

Junctions are locations where two or more pipes join together to form another pipe or channel.

Multiple pipes or channels coming together at a junction should flow together smoothly to avoid high head losses. Items that promote turbulent flow and high losses include a large angle between the two (>60°), a large vertical difference between the two (greater than 6 inches (6") between the two inverts), and absence of a semicircular channel or benching at the bottom of the junction box in the case of pipes. Special problems arise when smaller pipes join a larger one at a junction.

(a) Straight Through Manhole

In a straight through manhole where there is no change in pipe size, the minor loss shall be calculated by:

$$H_m = 0.05\ (V^2/2g)$$

(b) Incoming Opposing Flows

The head loss at a junction, H_{jl}, for two almost equal and opposing flows meeting head-on with the outlet direction perpendicular to both incoming directions is considered as the total velocity head of outgoing flow.

$$H_{jl} = V^2/2g$$

(c) Changes in Direction of Flow

When main storm drainpipes or lateral lines meet in a junction, velocity is reduced within the chamber and specific head increases to develop the velocity needed in the outlet pipe. The sharper the bend (approaching 90°) the more severe the energy loss becomes. When the outlet conduit is sized, determine the velocity and compute head loss in the chamber by the minor head loss formula in conjunction with the following:

K	Degree of Turn (In Junction)
0.19	15
0.35	30
0.47	45
0.56	60
0.64	75
0.70	90 and greater

Any degrees of turn greater than 90 degrees requires the approval of Water Resources Division prior to submission of plans.

For a graphic solution to other degree of turns, refer to drawing 9-6.

Table 9-2 Entrance Loss Coefficients for Culverts (FHWA 1985) Outlet Control, Full or Partly Full Entrance Head Loss.

$H_e = k_e (V^2/2g)$

Type of *Structure and Design of Entrance*	*Coefficient* k_e
Pipe, Concrete	
Projecting from fill, socket end (groove-end)	0.2
Projecting from fill, sq. cut end	0.5
Headwall or headwall and wingwalls	
Socket end of pipe (groove-end)	0.2
Square Edge	0.5
Rounded (radius = 1/12D)	0.2
Mitered to conform to fill slope	0.7
*End-section conforming to fill slope	0.5
Beveled edges, 33.78 or 458 bevels	0.2
Side- or slope-tapered inlet	0.2
Pipe, or Pipe-Arch, Corrugated Metal	
Projecting from fill (no headwall)	0.9
Headwall or headwall and wingwalls square-edge	0.5
Mitered to conform to fill slope, paved or unpaved slope	0.7
*End-section conforming to fill slope	0.5
Beveled edges, 33.78 or 458 bevels	0.2
Side- or slope-tapered inlet	0.2
Box, Reinforced Concrete	
Headwall parallel to embankment (no wingwalls)	
Square-edged on 3 edges	0.5
Rounded on 3 edges to radius of 1/12 barrel dimension, or beveled edges on 3 sides	0.2
Wingwalls at 308 to 758 to barrel	
Square-edged at crown	0.4
Crown edge rounded to radius of ½ barrel dimension, or beveled top edge.	0.2
Wingwalls at 108 to 258 to barrel	
Square-edged at crown	0.5
Wingwalls parallel (extension of sides)	
Square-edged at crown	0.7
Side- or slope-tapered inlet	0.2

*Note: "End-section conforming to fill slope," made of either metal, concrete or HDPE are the sections commonly available from manufacturers. From limited hydraulic tests they are equivalent in operation to a headwall in both *inlet* and *outlet* control. Some end sections, incorporating a *closed* taper in their design, have a superior hydraulic performance.

The following equation may be used to determine the loss in head in cases where it may be necessary to split or branch the flow into another drain.

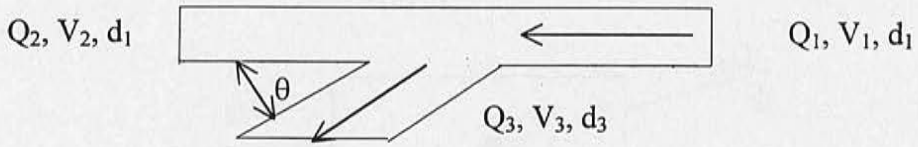

$$H_{br} = cV_1^2/2g$$

Divergence Angle - θ	$Q_3/Q_1 = 0.3$	$Q_3/Q_1 = 0.5$	$Q_3/Q_1 = 0.7$
90°	c = 0.76	0.74	0.80
60°	c = 0.59	0.54	0.52
45°	c = 0.35	0.32	0.30

(d) Several Entering Flows

The computation of losses in a junction with several entering flows utilizes the principle of conservation of energy, involving both position energy (elevation of water surface) and momentum energy (mass times velocity head). Thus, for a junction with several entering flows, the energy content of the inflows is equal to the energy content of the outflows plus additional energy required by the collision and turbulence of flows passing through the junction. In addition, when two nearly equal flows enter the junction from opposing directions, head loss is considered as the total velocity head of the outgoing flow.

For example, the total junction losses at the sketched intersection is as follows:

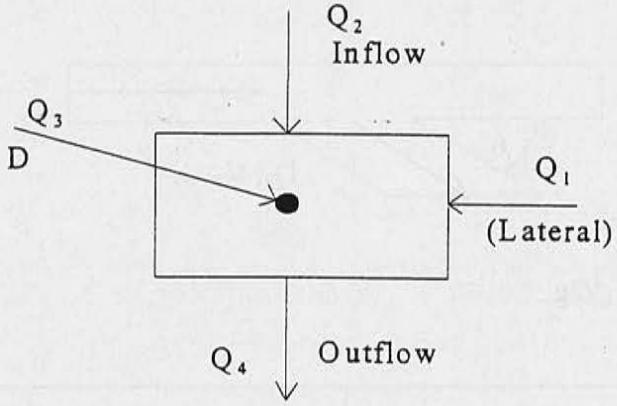

Figure 9-1

$$Hj_2 = [(Q_4V_4^2) - (Q_1V_1^2) - (Q_2V_2^2) + (KQ_1V_1^2)] / (2gQ_4)$$

Where:

Hj_2 = junction losses, ft
Q = discharges, cfs
V = horizontal velocities ft/s
V_3 = is assumed to be zero
K = bend loss factor

Subscript nomenclature for the equation is as follows:

Q_1 = 90 ° lateral, cfs
Q_2 = straight through inflow, cfs
Q_3 = vertical dropped-in flow, from an inlet, cfs
Q_4 = main outfall = total computed discharge, cfs
V_1, V_2, V_3, V_4 are the horizontal velocities of foregoing flows, respectively in feet per second

Also assume: $H_b = K (V_1^2)/2g$ for change in direction.
No velocity head of an incoming line is greater than the velocity head of the outgoing line.
Water surface of inflow and outflow pipes in junction to be level.

When losses are computed for any junction condition for the same or a lesser number of inflows, the above equation will be used with zero quantities for those conditions not present. If more directions or quantities are at the junction, additional terms will be inserted with consideration given to the relative magnitudes of flow and the coefficient of velocity head for directions other than straight through.

(3) Bend Loss

Bend losses shall be calculated from the following equations:

$$H_b = K_b (V^2/2g)$$

In which

$$K_b = 0.20 (\Delta/90°)^{0.5}.$$

Where Δ = Central angle of bend in degrees.

Bend losses should be included for all closed conduits, those flowing partially full as well as those flowing full.

(4) Trashrack Head Loss

The head loss through a stationary trashrack is commonly determined from the following equation:

$$H_{TR} = K_{TR} (V^2_n/2g)$$

$$K_{TR} = 1.45 - 0.45\ A_n/A_g - (A_n/A_g)^2$$

Where K_{TR} = Trashrack coefficient

A_n = Net area through bars, in ft^2

A_g = Gross area of trashrack and supports (water area without trashrack in place), in ft^2

V_n = Average velocity through the rack openings (Q/A_n), in ft/sec

For design, assume that the rack is clogged, thereby reducing the value of A_n by 50%.

9-12 CLOSED CONDUITS

The specific type of pipe or alternate pipe to be used in the development shall be shown on the plans. If the Consulting Engineer or contractor proposes to use any type of pipe not shown on the approved plans, the plans shall be resubmitted to the county for approval. The minimum inside diameter for pipes shall be no less than twelve inches (12"). No storm drain conduit shall have a diameter less than that of the conduit immediately upstream of it.

A. Material

Drainage systems to be maintained by the County of Sacramento shall be constructed of the following materials for the specific purpose specified:

i. Reinforced Concrete Pipe

Class of pipe shall be based upon depth as detailed in the Standard Drawings. Pipe shall conform to ASTM C76, latest revision. The consultant shall specify on the plans that the assembly of joints shall be in accordance with the pipe manufacturer's recommendations and the requirements of ASTM C 443.

ii. Concrete Cast-In-Place-Pipe

(1) Where Concrete Cast-In-Place-Pipe is to be used, a soil report is required for the project that addresses placement of Concrete Cast-In-Place-Pipe. A copy of said soil report must be provided in addition to the items required in sub-section 9 of this Section. Additionally, the Consulting Engineer shall provide details to the County for connection of the Concrete Cast-In-Place-Pipe to different piping materials as will be used.

(2) The minimum wall thickness at all points shall be 1/12 of the nominal internal diameter of the pipe plus one-half inch (1/2"), but in no case less than two inches (2").

iii. Polyvinyl Chloride Pipe

(1) Polyvinyl Chloride (PVC) Pipe may be used conforming to one of the following specifications:

DIAMETER	ASTM DESIGNATION
12 inch	D 3034, SDR 35 C900, DR 18
14 inch	C905, DR 18
15 inch	D 3034, SDR 35 C905, DR 18
16 inch	C905, DR 18
18 inch	D 2241, SDR 51 C905, DR 18
20 inch	C905, DR 18
21 inch	D 2241, SDR 51
24 inch	D 2241, SDR 51 C905, DR 18
27 inch	D 2241, SDR 51
30 inch	C905, DR 18

(2) Joints of PVC pipe shall consist of either an elastomeric gasket coupling or an integral bell and spigot with an elastomeric gasket. The consultant shall specify on the plans that the assembly of joints shall be in accordance with the pipe manufacturer's recommendations and the requirements of ASTM D 3212.

(3) Use of PVC pipe downstream of the last manhole or junction structure to open channels, detention facilities or to a daylight condition is not allowed.

iv. High Density Polyethylene Pipe

(1) High Density Polyethylene Pipe shall be AASHTO M294 or MP7-97 Type S or Type D with inside diameters of 12 to 60 inches. Pipe joints shall be bell and spigot or welded type, certified capable of watertight performance, with O-ring gaskets meeting ASTM F-477. The assembly of joints shall be in accordance with the pipe manufacturer's recommendations and the requirements of ASTM D 3212.

(2) Use of High Density Polyethylene Pipe downstream of the last manhole or junction structure to open channels, detention facilities or to a daylight condition

is not allowed. This condition does not preclude the use of HDPE for driveway culverts.

v. **Metal Pipe**

(1) Metal pipe shall be corrugated steel, corrugated aluminum, corrugated aluminized steel Type II, ribbed steel, ribbed aluminized steel Type II or ribbed aluminum.

(2) Metal pipe shall be designed for a minimum maintenance free service life of fifty (50) years in accordance with the methods specified in Section 854.3 and 854.4 of the California Department of Transportation Highway Design Manual. To assure that the maintenance free service life is achieved, alternative metal pipe may require added thickness and/or protective coatings. The Consulting Engineer shall provide certified copies of the laboratory report giving the results of pH and resistivity tests. The report shall also include a map showing the location of each site and depth where samples were taken.

(3) Unless otherwise specified by the Director, a minimum of two soil samples shall be taken for the first 1,000 lineal feet of pipe or fraction thereof on a project with a minimum of one additional sample being required for each additional 1,000 lineal feet of pipe or fraction thereof. The samples shall be taken along the approximate alignment and at the approximate depth of the pipe to be installed. Priority in sampling shall be given to trunk facilities.

B. Cover Requirements

At locations where the minimum cover requirements cannot feasibly be obtained, the conduit shall be either encased in concrete or provided with a concrete cover or other methods of pipe protection as approved by the Director. Cover shall be measured from the top of a rigid pavement or the bottom of a flexible pavement.

i. **Minimum Cover**

The minimum cover height shall be per Table 9-3.

Table 9-3 Minimum Pipe Cover Requirements

Pipe Material Type and Location	Minimum Cover Requirement
High Density Polyethylene (HDPE) – non traffic areas	Twelve inches (12") – top of pipe to top of grade
High Density Polyethylene (HDPE) – for dia. to 36" in traffic areas	Twelve inches (12")
High Density Polyethylene (HDPE) – dia. 42" to 60" in traffic areas	Twenty-four inches (24")
Corrugated Metal	Span/8 but not less than 12 inches (12")
Spiral Rib - Steel	Span/3 but not less than twelve inches (12")

Pipe Material Type and Location	Minimum Cover Requirement
Spiral Rib – Aluminum with spans less than or equal to 72"	Span/2 but not less than twelve inches (12")
Spiral Rib – Aluminum with spans greater than 72"	Span/3 but not less than thirty inches (30")
Reinforced Concrete in unpaved areas and under flexible pavements	1/8 the diameter or rise (the greater of) but not less than twelve inches (12")
Reinforced Concrete under rigid pavements	A nine-inch (9") space between top of pipe and bottom of slab consisting of compacted granular fill shall be maintained at a minimum.
Cast-in-Place-Concrete-Pipes in paved areas	The Structural Section plus twenty-four inches (24")
Cast-in-Place-Concrete-Pipes in unpaved areas	Twenty-four inches (24")
Polyvinyl Chloride – C900 and C905	Twelve inches (12")
Polyvinyl Chloride – D2241 and D3034	Twenty-four inches (24")

Note: All depths shown are for a minimum trench width equal to the outside diameter of the pipe plus sixteen inches (16") measured at the top of the pipe.

ii. Maximum Cover

Maximum height of cover shall be per tables 9-4a and b.

Table 9-4a Maximum Pipe Cover Requirements - Concrete and Plastic Pipe

Measured to bottom of trench in feet

DIA.	RCP Class					Cast In Place	PVC	HDPE
	I	II	III	IV	V			
12	Not Permitted	8	12	30	No Limit	No Limit	14	49
15		10	15	35			14	45
18		11	16	38			14	43
21		12	17	39			14	
24		12	18	39			14	43
27		13	19	39			14	
30		14	19	38			Not Permitted	34
33		14	20	38				
36		13	17	27	69			45
42		14	18	29	62	38		46
48		15	19	30	60	30		41
54		16	20	31	58	26		46
60	14	16	21	31	57	24		48
66	15	17	22	32	56	21		
72	15	18	23	33	56	21		

Note:

1. All depths shown are for a minimum trench width equal to the outside diameter of the pipe plus sixteen inches (16") measured at the top of the pipe.

Table 9-4b Maximum Pipe Cover Requirements - Metal Pipes

Measured to bottom of trench in feet

DIA.	CMP ** Thickness - inches					Ribbed Steel Pipe Thickness - inches			Ribbed Aluminum Pipe Thickness - inches			
	0.064	0.079	0.109	0.138	0.168	0.064	0.079	0.109	0.060	0.075	0.105	0.135
12	99	No Limits										
15	99											
18	99											
21	99	99										
24	93	99				36	50	67	21	29	49	64
30	74	93	99			30	40	56	17	24	40	51
36	62	78	99	99		26	35	48	14	21	34	44
42	53	66	93	99		21	31	41	13	18	30	37
48	46	58	81	99	99	20	28	38	12	17	26	34
54	47	52	72	93	99	19	26	34		15	25	31
60	43	53	65	84	99		25	32		14	23	28
66	39	48	68	76	93		22	30			21	26
72	35	42	62	70	85		22	28			20	25

Note:

1. All depths shown are for a minimum trench width equal to the outside diameter of the pipe plus sixteen inches (16") measured at the top of the pipe.
2. ** Normal pipe corrugation profile is 2 2/3" x ½". The corrugation of the pipes within the shaded box area shall have profile of 3" x 1" or 5" x 1".
3. When flow velocity exceeds five (5) feet per second, the next thicker gauge shall be used for CMP pipe.

iii. **Temporary Construction Vehicle Loading**

A note shall be made on the plans stating the minimum cover requirements during construction for temporary construction vehicle loading.

For metal and plastic pipes, place at least four feet (4') of cover over the top of the pipe.

For reinforced concrete pipe, place at least three feet (3') of cover over the top of the pipe.

C. Trench Requirements

i. Trenches shall be excavated with full depth and vertical sides whenever possible.

ii. The minimum trench width shall not be less than the outside diameter of the pipe barrel plus sixteen inches (16"), measured at the top of the pipe. The maximum trench width shall not exceed six (6) nominal pipe diameters, measured at the top of the pipe.

iii. In fill areas, or in areas with poor soil conditions where it is anticipated that a good, firm, vertical-walled trench cannot be constructed, the consulting engineer shall design the pipe structural requirements in accordance with good engineering practice. A note shall be placed on the plans directing the contractor to place the proper strength pipe if trench conditions encountered differ from the design trench.

iv. Where conditions require side sloping of trenches, the minimum vertical trench shall be from the bottom of the trench to one foot (1') over the top of the pipe.

D. Spacing Requirements

When multiple lines of pipes or pipe arches greater than forty-eight inches (48") in diameter or span are used, they shall be spaced so that the sides of the pipes shall be no closer than one-half diameter or three feet (3'), whichever is less, to permit adequate compaction of backfill material. For diameters less than forty-eight inches (48"), the minimum clear spacing shall not be less than two feet (2').

E. Alignment Requirements

i. The location of storm drainage pipelines in new streets shall be six feet (6') north or west of and parallel to the centerline of the street. For major roadways, pipes may be placed 3 feet (3') off lip of gutter where appropriate.

ii. All new storm drains shall be placed a minimum of one hundred feet (100') from existing and proposed water wells. Encroachments less than one hundred feet (100') require approval of the Environmental Management Department prior to plan approval.

iii. Meandering and unnecessary angular changes of pipelines shall be avoided. Angular changes, when necessary, shall not exceed 90 degrees unless approved by the Director. No angular changes in direction are allowed for Concrete Cast-In-Place-Pipe other than on a radius.

iv. Pipeline Radius Criteria: All pipe placed on curves shall meet manufacturer's recommendations for curved alignment. All curves, radii, length of pipe joints, and types of pipe shall be shown on the plans. The minimum radius of curvature for Concrete Cast-In-Place-Pipe shall be determined by the formula R = 30D where R = radius of curvature, and D = nominal internal pipe diameter, with R and D expressed in the same units.

v. Pipelines shall be laid straight in both horizontal and vertical planes between manholes unless otherwise approved by the Director.

vi. Where storm drain pipelines of different diameter join, the invert elevations shall be adjusted to maintain a uniform energy gradient.

vii. In some situations, pipelines may be placed in alternative locations, including under curb and gutter, as approved by the Director.

F. Velocity

i. The minimum full flow velocity shall be no less than two (2) feet per second. The maximum velocity shall be less than the critical velocity at full flow.

ii. When full-flowing pipelines that produce velocities greater than twelve (12) feet per second are approved by the Director, special provisions shall be taken to prevent erosion or pipe displacement.

G. Entrances and Exits

i. Headwalls and other structures shall be designed to increase hydraulic efficiency, prevent erosion adjacent to the conduit and provide a counterweight to prevent flotation.

ii. When a drop inlet is not installed, flared end sections should be used. Headwalls may be used where dictated by physical conditions. Both installations shall conform to the State Standard Plans.

iii. Where exits are necessary, headwalls or flared end sections should be used for culverts. Where drainage systems discharge into a channel, standard headwalls shall be installed per the State Standard Plans. The vertical face of the headwall shall be set back a sufficient distance from the channel side slope to accommodate flapgates in a fully opened position without encroachment of the flap past the channel side slope face.

iv. Energy dissipation shall be designed at outlets where velocities are erosive.

H. Water and Soil Tight System

i. All storm drain pipe, manholes, and fitting connections shall be water and soil tight.

ii. The allowable infiltration for any portion of the storm drain system shall be measured by a weir or current meter placed in the appropriate manhole and shall not exceed five hundred (500) gallons per inch of internal diameter per mile per day.

iii. The allowable water exfiltration for any length of the storm drain pipe between manholes shall be measured and shall not exceed five hundred (500) gallons per inch of internal pipe diameter per mile of pipe per day. During exfiltration testing, the maximum internal pipe pressure at the lowest end shall not exceed eleven feet (11') of water or 5.0 psi and the internal water head shall be two feet (2') higher than the top of the pipe or two feet (2') higher than the ground water level, whichever is greater. Vacuum go/no-go testing method or alternate testing methods may be submitted for thirty-inch (30") or greater internal diameter pipes.

iv. A note shall be placed on the improvement plans stating these requirements and that the contractor is responsible for providing equipment and labor for performing tests and making measurements when directed to do so by the county's inspector.

I. Bores and Jacked Pipe

All conductor or casing pipes shall be sealed at both ends in such a manner as to provide waterproof seal.

9-13 MANHOLES

Requirements for manholes are as follows:

A. Standard precast concrete or saddle type manholes shall be used except where special manholes or junction boxes are required. The design must be submitted to the Director for approval. In no case will junction boxes or manholes be allowed which are smaller than twenty-four inches (24") inside dimension. Precast concrete manholes shall be manufactured in accordance with ASTM C 478. Cast-in-place manholes shall conform to drawings 9-7 and 9-8.

B. Manholes shall be located at junction points, angle points greater than 15 degrees, and changes in conduit size or materials. On curved pipes with radii of 200-feet to 400-feet, manholes shall be placed at the B.C. and E.C. and on 300-feet maximum intervals along the curve. On curves with radii exceeding 400-feet, manholes shall be placed at the B.C. and E.C. and on 400 feet maximum intervals along the curve for pipes twenty-four inches (24") and less in diameter and 500-feet maximum intervals along the curve for pipes greater than twenty-four inches (24") in diameter. Manhole spacing on curves with radii less than 200-feet will be determined on an individual basis.

C. Spacing of manhole, junction boxes or inlets of such size as to be accessible for maintenance shall not exceed 400-feet for drains fifteen inches (15") and smaller in diameter, 500-feet for drains between eighteen inches (18") and thirty-six inches (36") in diameter, and 600-feet for pipes greater than forty-two inches (42") in diameter. The spacing of manholes shall be nearly equal whenever possible. Manholes shall not be placed in roadway intersections unless wholly necessary as a junction point.

D. All manholes and junction boxes other than inlets shall have standard manhole frames and covers as shown in drawings 9-9 to 9-10. Manholes will not be allowed in the gutter flow line except as approved by the Director.

E. A reinforced concrete lid as shown on Standard Drawing 9-7 shall be required when any pipe would enter the manhole above any portion of the base of a manhole cone.

F. Slotted manhole covers may be used to pick up minor drainage in non-traffic areas, including on-site drainage on residential lots. Covers shall conform to drawing 9-11.

G. Improvement plans shall include a special detail for all manholes at junction points where there is a change in pipe direction and pipe diameter exceeds forty-eight inches (48").

H. The maximum manhole chimney height is eighteen inches (18").

I. Resilient connectors are required between the manhole and pipe except in the case of type of Type B Saddle Manholes (drawing 9-7). The resilient connector is manufactured in accordance with ASTM C 923. Use of non-shrinking or expansive grout for making connections of pipe and water stop to manhole walls is required.

9-14 JUNCTION BOXES

Drop inlets shall not be used as junction boxes. The requirements for junction boxes are as follows:

A. Junction boxes shall be constructed of reinforced concrete or fabricated from reinforced concrete pipe section where size limitations permit.

B. Minimum wall thickness for reinforced concrete junction boxes shall be six inches (6").

C. The inside dimension of junction boxes shall be such as to provide a minimum of three-inch (3") clearance on the outside diameter of the largest pipe in each face.

D. All junction boxes shall be rectangular unless otherwise approved by the Director.

E. Junction boxes deeper than four feet (4') shall have a minimum inside dimension of forty-eight inches (48").

F. Junction boxes shallower than four feet (4') shall have a minimum inside dimension of thirty-six inches (36").

G. Pipes adjacent to junctions shall have tight, impermeable joints.

9-15 INLETS

Grating-type inlets are used on steep sloped streets (generally greater than 4%) where due to the high velocity of the street flow it is difficult to direct the water into a curb-opening inlet. Inlets with grates only should not be used in sump conditions because of the possibility of debris clogging the grates.

Requirements for inlets are as follows:

A. Inlets shall be placed so that the length of flow in the gutter does not exceed 500-feet in either direction, except for Class B streets in AR-1 development where length of gutter flow shall not exceed 1,000-feet in either direction. The flow rate used to check the depth shall include any runoff that may by-pass upstream grates. Exceptions to the 500- and 1,000-feet limit standards may be granted by the Water Resources Division if in the opinion of the Water resources Division doing so is justifiable.

B. Figure 1 is a cross section of a typical compound gutter.

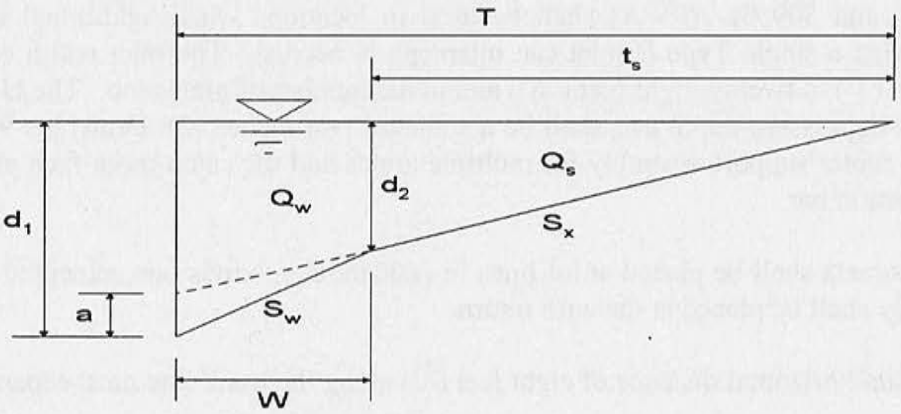

Figure 1 – Flow in Compound Gutters

The equations for determining spread and depth in compound gutter sections are given below.

$d_1 = TS_X + a$ $\qquad S_W = a/W + S_X$ $\qquad A = (T^2S_X + Wa)/2$

$d_2 = (T - W)S_X$ $\qquad t_S = (Q_S n/0.56S_X^{5/3}S^{1/2})^{3/8}$ $\qquad Q = Q_W + Q_S$

$$Q_S = 0.56[(T - W)S_X]^{2.67}S^{0.5}/nS_X$$

$$Q_W = 0.56\{(TS_X + a)^{2.67} - [(T - W)S_X]^{2.67}\}S^{0.5}/n(a/W + S_X)$$

Where:

T = width of flow or spread, ft
Q = gutter flow rate, cfs
S_X = pavement cross slope, ft/ft (typically 0.02)
W = width of depressed gutter section, ft
S = longitudinal slope, ft/ft
Q_W = depressed section flow, cfs
S_W = depressed section slope, ft/ft
a = gutter depression, ft

d_1 = depth of water at curb, ft d_2 = depth of water at change in section slope, ft
n = Manning's roughness coefficient (typically 0.016)
Q_S = gutter capacity above depressed section, cfs
t_S = width of flow or spread beyond depressed section, ft

C. A clogging factor of fifty percent (50%) shall be used when computing the interception capacity of the inlet. Drawing 9-12 shall be used to compute the flow capacity for Type B inlets. That drawing does not include the clogging factor.

D. The connector pipe from inlets at sag points shall be sized to accommodate the design runoff taking into consideration by-pass flow from upstream inlets. Drawings 9-13 to 9-15 show the Type B inlet and its frame and grate.

E. Type F inlets shall be used in unimproved medians, and may be used in roadside ditches away from driveway locations and in back lot situations. Drawing 9-18 is the Type F inlet.

F. Curb opening catch basins with grating(s) and debris skimmer (Standard Plan drawings 300, 301, 308, and 309 by APWA) shall be used in locations where additional inlet capacity beyond what a single Type B inlet can intercept, is needed. The inlet width can vary from seven feet (7') to twenty-eight feet (28') and in the number of grates too. The H dimension is the gutter depression depth and shall be a standard two inches (2). Drawings 9-16 and 9-17 show the center support assembly for multiple grates and the catch basin face plate assembly and protection bar.

G. Inlets in streets shall be placed at lot lines in residential subdivisions, except at intersections where they shall be placed at the curb return.

H. A minimum horizontal distance of eight feet (8') along the trunk line must separate laterals.

9-16 PIPE STUBS

The criteria for pipe stubs shall be as follows:

A. Temporary pipe stubs shall be two (2) sizes larger than the permanent pipe and a flared end section or a corrugated drop inlet shall be used at the entrance.

B. A headwall and trash rack shall be required where the upstream pipe ends at a park or open field.

C. Whenever a pipe stub is required, all ditches and swales shall be "trained" toward the stub.

D. Pipe stubs shall be as deep as possible to provide for future extension.

E. Flared end sections shall be required for the upstream/downstream end of a pipe system that does not connect to an existing pipe system or channel.

9-17 HEADWALLS, WINGWALLS, ENDWALLS, TRASH RACKS, ACCESS CONTROL RACKS AND RAILINGS

The requirements for these facilities are as follows:

A. All headwalls, wingwalls and endwalls shall be considered individually and in general shall be designed in accordance with the Standards and Specifications of the California Department of Transportation.

B. Trash racks will be provided where they are necessary to prevent clogging of culverts and storm drains and eliminate hazards. Trash racks shall be designed such that the ratio of trash rack open area to drain opening is at a minimum four to one (4:1).

C. Access control racks shall be required on pipes twenty-four inches (24") or larger and shall be designed such that the ratio of access control rack open area to drain opening is at a minimum four to one (4:1).

D. The Director may require metal beam guardrail or chain link fencing at culverts, headwalls, box culverts, and on steep side slopes. Installation shall be in accordance with the Standard Construction Specifications.

9-18 DRAINAGE PUMPS

Drainage pumping plants shall be designed in accordance with the latest edition of the Hydraulic Institute Standards and as specified by the Director.

9-19 DETENTION SYSTEMS

Detention system designs require the approval of the Director.

9-20 OPEN CHANNELS

A. Open channels are required whenever one or more of the following applies:

i. The design flow rate exceeds the capacity of a seventy-two inch (72") pipe.

ii. The outfall is at an elevation such that minimum cover cannot be obtained over the pipe.

iii. County policy requires the channel to remain natural.

B. Open channels shall consist of natural earth channels, lined bottom channels or concrete lined channels as approved by the Director.

C. Criteria for open channels shall be as follows:

i. Open channel design shall include a water surface profile analysis using the Corp of Engineers HEC RAS computer program or their UNET program or other hydraulic program if approved and directed by Water Resources Division.

ii. Open channels shall be designed to convey the 100-year flood event with a minimum one-foot (1') of freeboard. The Director may specify additional freeboard requirements.

iii. Minimum velocity: Two-feet per second (ft/s)

iv. Maximum velocity:
(1) Earth channels, six ft/s
(2) Lined channels, ten ft/s
(3) Bottom-lined channels, eight ft/s

v. The Consulting Engineer shall determine if a need for super elevating the outside bank on bends is required.

vi. The centerline curve radius of an open channel shall be equal to or greater than twice the bottom width (thirty-five foot (35')minimum).

vii. Natural earth channels shall be vegetated with native grasses or other permanent vegetative cover as determined by the Director.

viii. Channels shall be constructed to a typical cross section. Fully lined channels shall be designed with side slopes of 1 horizontal to 1 vertical (1:1); channels with unlined sides shall be designed with side slopes of 3 horizontal to 1 vertical (3:1) or flatter. Exceptions shall be approved by the Director. Drawing 9-24 shall be used in the design of lined channels.

ix. All channels shall have a minimum bottom width of six feet (6') and shall have access ramps for maintenance equipment. An access ramp is required between each set of culverts or other above grade channel obstructions and at the upstream and downstream ends of the channel. Drawing 9-25 shows the typical ramp and transition detail. A twenty foot (20') service road shall be provided having a sixteen-foot (16') improved surface and two-foot (2') shoulders on each side. Roads having a radius tighter than forty-two feet (42') shall require additional width as determined by Water Resources Division.

x. For all channels, either improved or natural, the following items shall be shown on improvement plans in addition to information heretofore required:

(1) Typical sections and cross-sections.

(2) Profile of the existing channel and top of bank profile for a minimum of 1,000-feet each side of the development in order to establish an average profile grade through the development. The Consulting Engineer shall contact the County for profiles of major drainage channels.

(3) Interceptor Ditches - Interceptor ditches or approved alternates shall be placed at the top of the cut or bank where deemed necessary by the Director to prevent erosion of the channel bank. Runoff shall not be allowed to "sheet drain" over top of bank.

xiii. Erosion Protection - Erosion protection, as specified by the Director, shall be placed at the top of the cut or bank, where deemed necessary by the Director, to prevent erosion of the channel bank. Drawings 9-26 and 9-27 show details for both pipe and ditch discharge erosion.

9-21 OUTFALL DESIGN

Requirements for outfall design are as follows:

A. All drainage outfalls shall be shown in both plan and profile on the improvement plans for a distance of 1,000 feet or until a definite "daylight" condition is established.

B. All existing and proposed drainage ditches upstream and downstream of the improvement shall be shown on the plans and profile for a distance of at least 500 feet or until an average profile grade through the improvement is established.

C. The profiles shall include ditch flow-line and top of bank elevations.

D. When improvements have more than one unit or phase, the drainage outfall shall be shown as extending to the property boundary and beyond, if required, although it may not be constructed with the current unit development. All temporary outfalls shall be shown in both plan and profile on the improvement plans.

9-22 FENCING REQUIREMENTS

The requirements for fencing (see drawings 9-28 and 9-29) shall be as follows:

A. Improved channels exceeding three feet (3') in depth and with side slopes steeper than 3:1 shall be fenced with six foot (6') chain link or other suitable open style fencing. The approval of Water Resources Division is necessary for other suitable open style fencing.

B. In all other areas, fencing shall be placed only upon the recommendation of the Director.

C. Drive gates shall be minimum 12-feet (12') wide, and walk gates shall be 4-feet (4') wide minimum. Drive gates shall be set a minimum of 20-feet (20') back from the edge of pavement to allow for a safe parking area off of the traveled way while opening /closing gates. AC paving shall be provided between the traveled way and drive gate. AC paving design shall be per Section 4 – STREETS of these Improvement Standards.

D. Fences shall be located 6-inches (6") inside the drainage right-of-way and easement lines and a minimum one-foot (1') from top of bank.

9-23 CROSS CULVERT CRITERIA

The design of cross culverts shall be as follows:

A. Cross culverts shall be designed in accordance with procedures outlined in the U.S. Department of Transportation "Hydraulic Design of Highway Culverts," Hydraulic Design Series No. 5, September, 1985.

B. Cross culvert size shall be determined based on runoff as specified in these standards.

C. Cross culverts shall be checked against 100-year runoff to assure that no adverse effect will occur upstream and downstream because of the higher design event.

D. Cross culvert profile will be determined by an examination of the overall profile of the channel for a minimum distance of 500-feet on each side of the installation.

9-24 DRAINAGE ALONG CLASS "C" STREETS

The criteria for design of drainage along Class "C" streets are as follows:

A. Roadside ditches shall be sized to convey anticipated runoff. If the roadside ditch extends beyond the dedicated right-of-way, either the right-of way shall be extended to contain the ditch in the right-of -way or a drainage easement shall be dedicated over the portion of the ditch outside the right-of-way.

B. Side slopes of roadside ditches shall be per standard drawing H-19 of these improvement standards.

C. Hydraulic gradients for roadside ditches shall be shown on the plans and shall be below the structural section of the roadway. Ditches shall be designed to convey the 100-year design flow.

D. Driveway culverts sized for each individual lot shall be included in the plans.

9-25 CLASS "C" SUBDIVISIONS

Design criteria for Class "C" subdivisions shall be determined on an individual basis. The Sacramento County Water Resources Division should be consulted before engaging in the design of any Class "C" subdivisions.

LIST OF DRAWINGS

Title	Drawing
PIPE BEDDING AND INITIAL BACKFILL (DRAINAGE)	9-1
DRAINAGE ZONES	9-2
DESIGN RUNOFF	9-3
DESIGN RUNOFF RESIDENTIAL	9-4
DESIGN RUNOFF COMMERCIAL	9-5
LOSS IN JUNCTION DUE TO CHANGE IN DIRECTION OF FLOW IN LATERAL	9-6
TYPE B SADDLE MANHOLE (MAIN LINE ID=48" OR LARGER)	9-7
TYPE A SADDLE MANHOLE	9-8
GREY CAST IRON STANDARD 24"MANHOLE FRAME & COVER	9-9
GREY CAST IRON STANDARD 24"MANHOLE FRAME & COVER	9-10
GRATE TYPE MANHOLE COVER	9-11
FLOW CAPACITY TYPE B GRATE	9-12
DROP INLET TYPE B	9-13
WELDED STEEL GRATE FRAME	9-14
WELDED STEEL GRATE	9-15
CENTER SUPPORT ASSEMBLY FOR MULTIPLE GRATES	9-16
CATCH BASIN FACE PLATE ASSEMBLY AND PROTECTION BAR	9-17
DROP INLET TYPE F	9-18
DROP INLET TYPE G (TYPE 2 C&G ONLY)	9-19
DRAINAGE INLET TYPE H	9-20
CORRUGATED METAL PIPE DRAINAGE INLET TYPE I	9-21
CORRUGATED PIPE FITTINGS	9-22
PIPE CONNECTIONS	9-23
LINED CHANNEL SECTION	9-24

TYPICAL RAMP AND TRANSITION DETAIL 9-25

EROSION CONTROL PIPE DISCHARGE 9-26

EROSION CONTROL DITCH DISCHARGE 9-27

BARBED WIRE AND WIRE MESH FENCES 9-28

CHAIN LINK FENCE 9-29

UTILITY STREAM CROSSING 9-30

CURB OPENING CATCH BASIN 300-1

CURB OPENING CATCH BASIN WITH GRATING(S) AND DEBRIS SKIMMER 301-1

MONOLITHIC CATCH BASIN CONNECTION 308-0

CATCH BASIN REINFORCEMENT 309-0

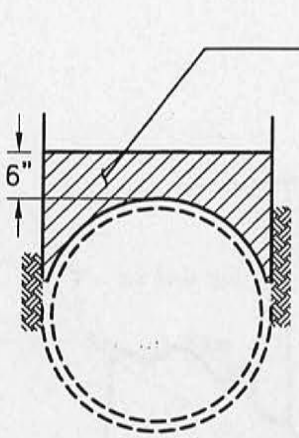

CAST–IN–PLACE
CONCRETE PIPE

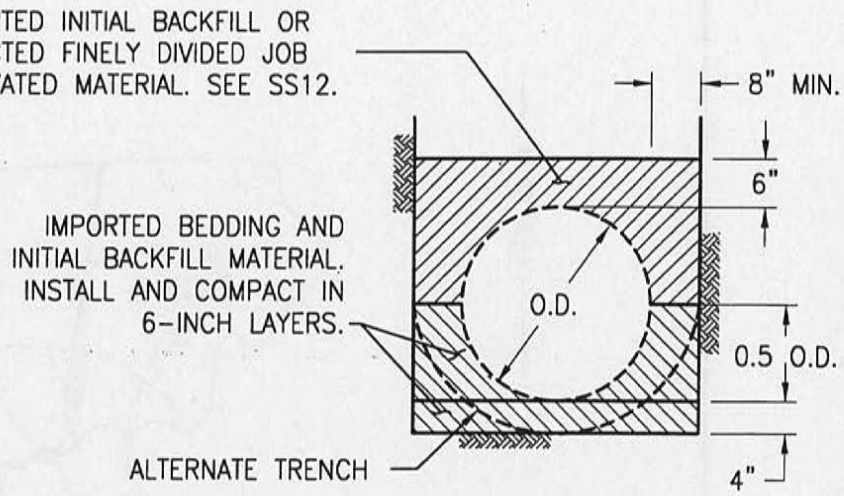

PIPES 24" OR GREATER
IN DIAMETER

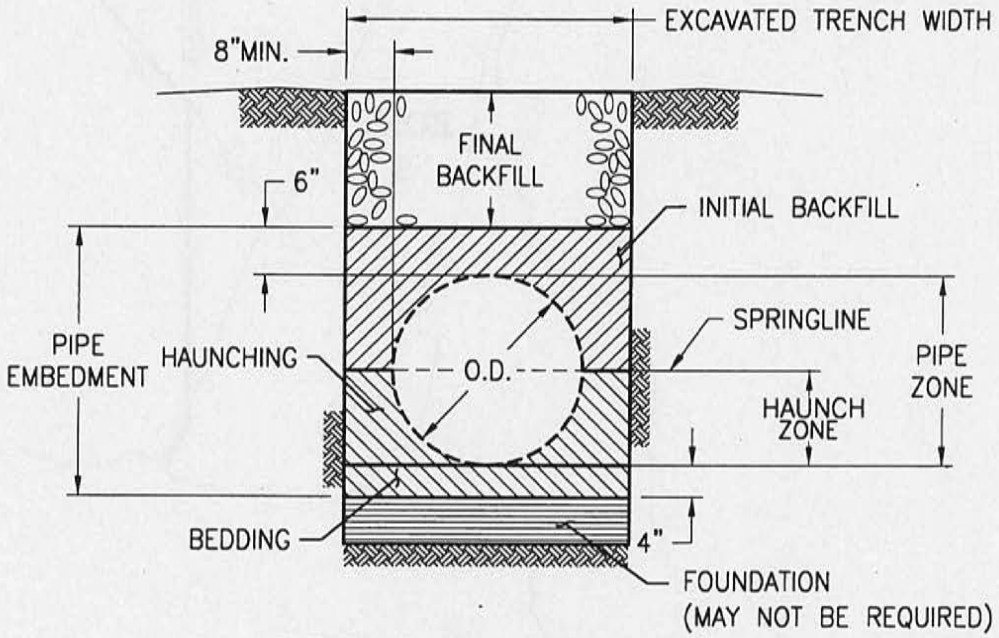

PIPES LESS THAN 24"
IN DIAMETER

NOTES

1. INITIAL BACKFILL MATERIAL SHALL BE THOROUGHLY COMPACTED AROUND PIPE BY SHOVEL SLICING OR TAMPING PER SS12–0.
2. TRENCH WIDTH SHALL CONFORM TO SS10–03.
3. BEDDING AND INITIAL BACKFILL MATERIAL SHALL CONFORM TO SS12.
4. BEDDING AND INITIAL BACKFILL FOR PVC PIPE SHALL BE CRUSHED ROCK. SAND & GRAVEL WILL NOT BE PERMITTED.

Robert J. Leonard
DIRECTOR

SACRAMENTO COUNTY
PUBLIC WORKS AGENCY

PIPE BEDDING AND INITIAL BACKFILL (DRAINAGE)

DRAWN BY: MYRA FIELDS
SCALE: NONE
DATE: 11/98

9-1

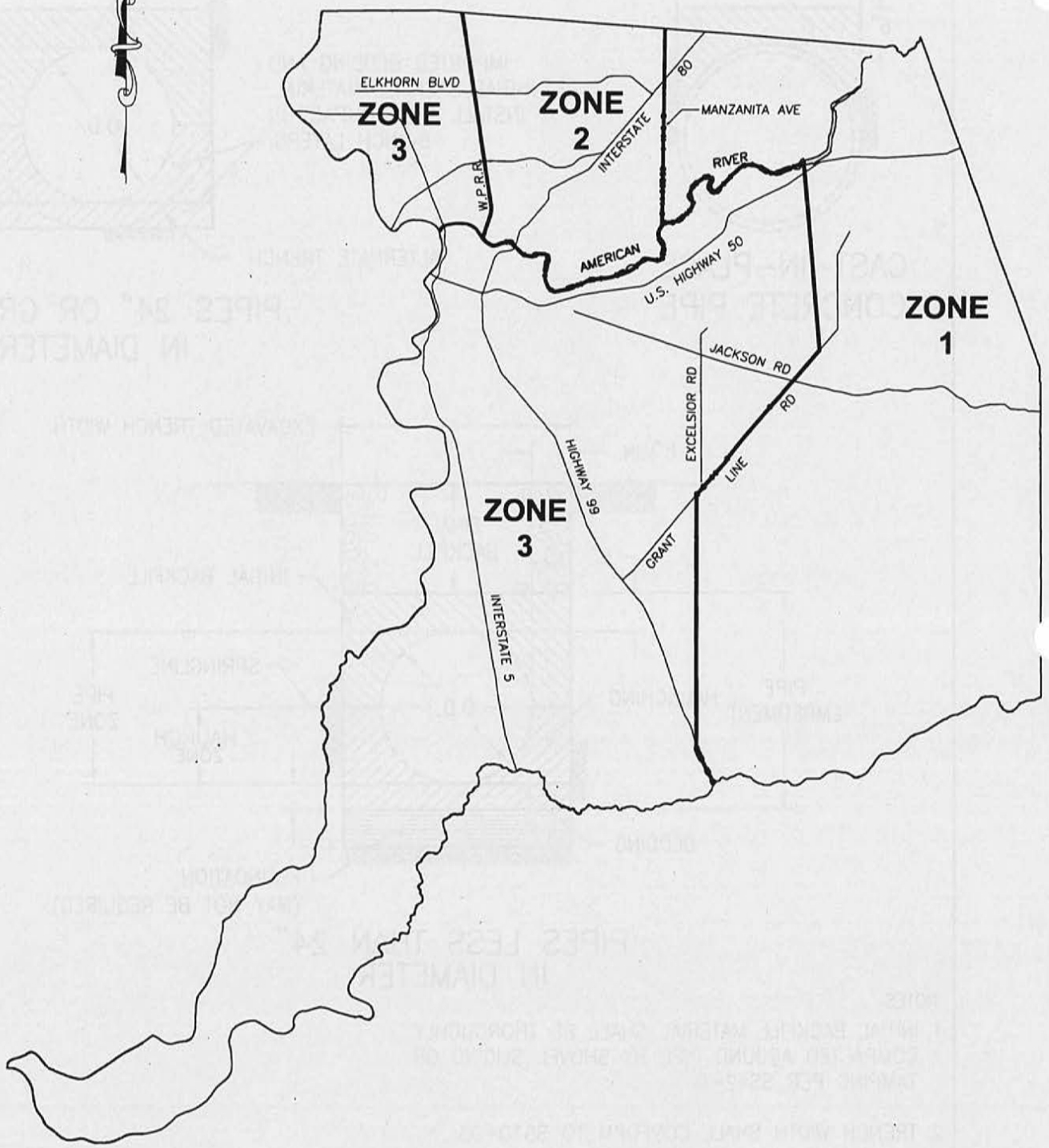

SACRAMENTO COUNTY
PUBLIC WORKS AGENCY

DRAINAGE ZONES

DIRECTOR

DRAWN BY: HEIDI HUBER
SCALE: NONE
DATE: 11/98

9-2

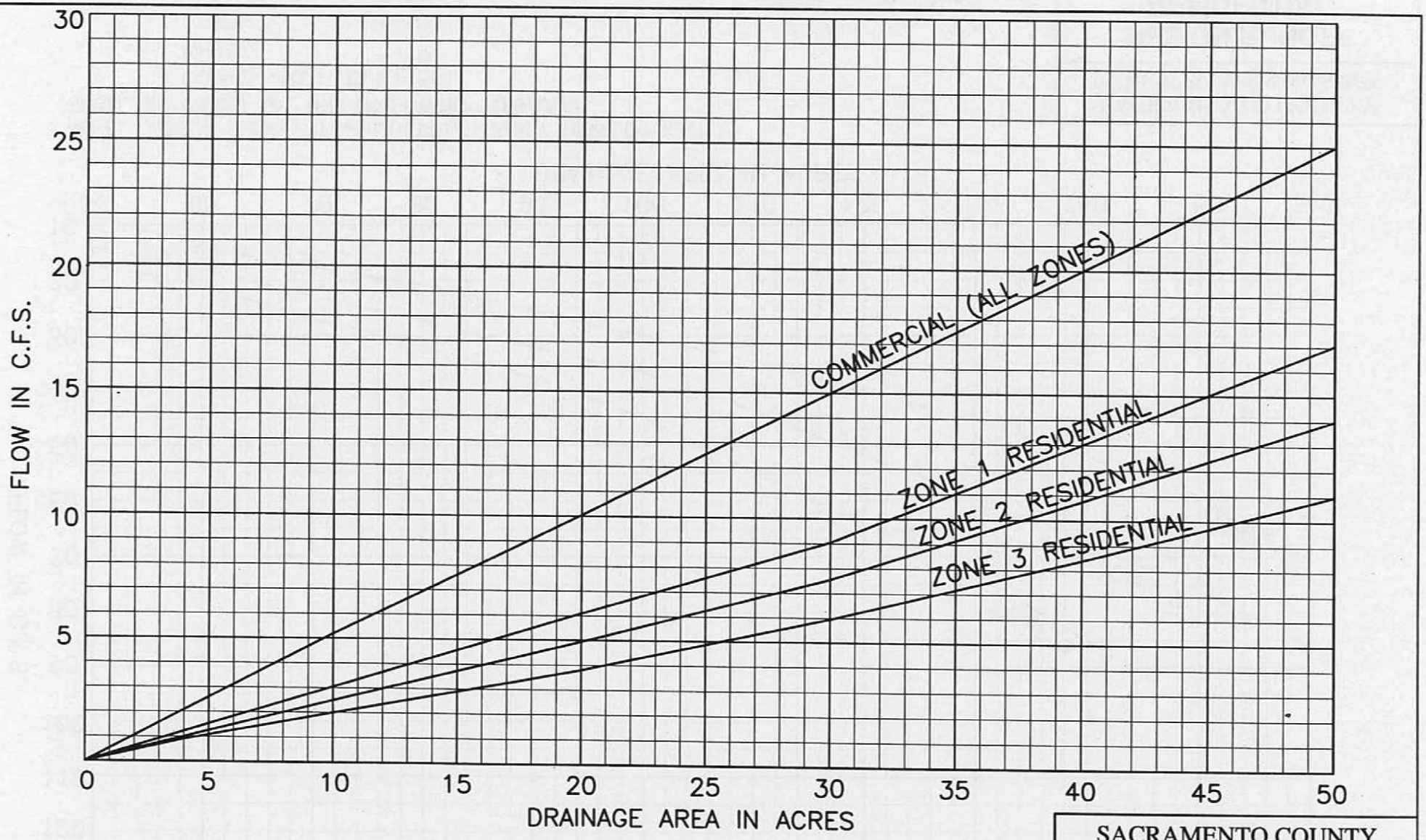

NOTE: SEE NOTE, DRAWING 9–4 FOR COMPUTING MULTIPLE FAMILY RUNOFF VALUES.

DIRECTOR

SACRAMENTO COUNTY
PUBLIC WORKS AGENCY

DESIGN RUNOFF

DRAWN BY: MYRA S. FIELDS
SCALE: NONE
DATE: 7/98

9-3

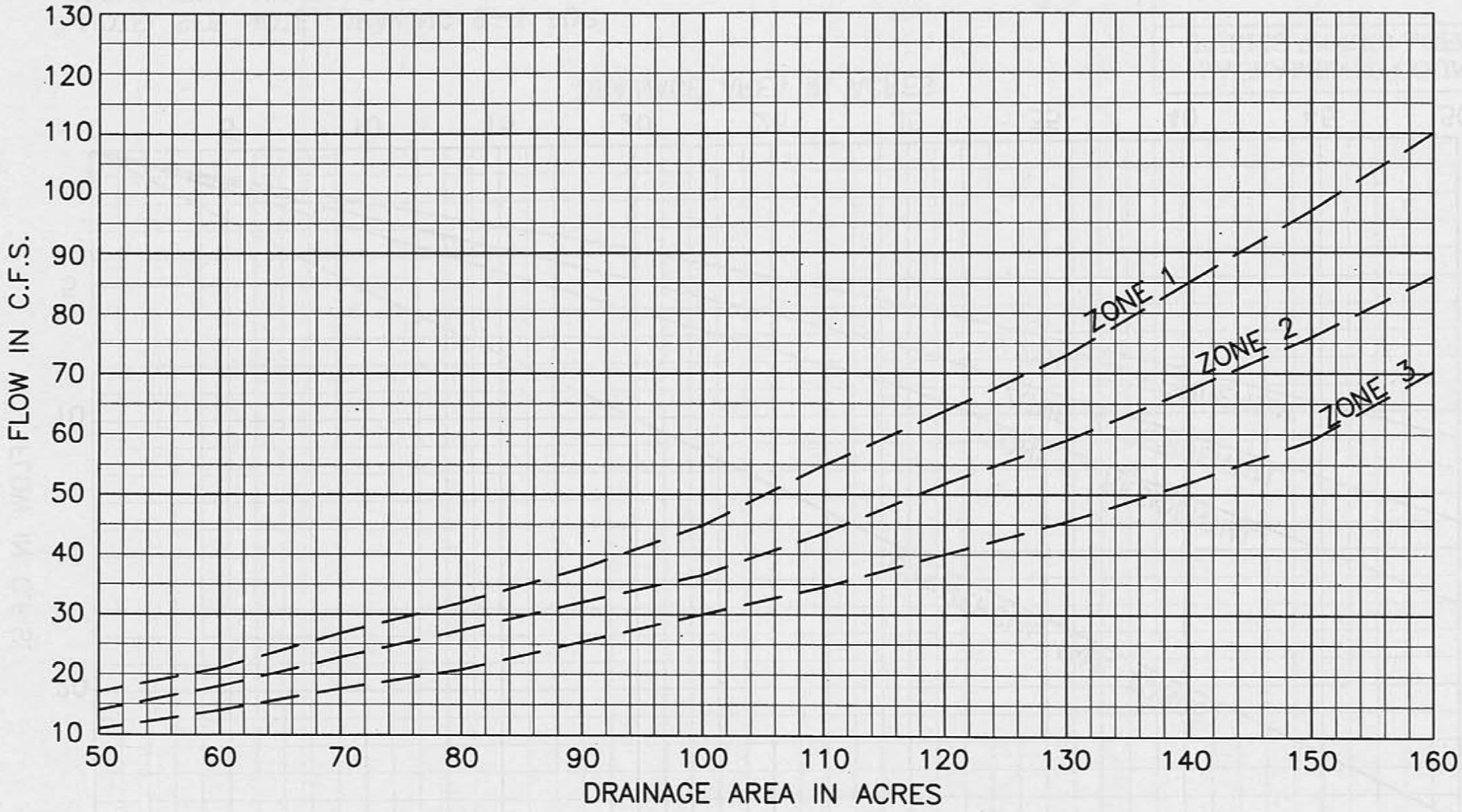

NOTE: DESIGN RUNOFF FOR MULTIPLE FAMILY DEVELOPMENT SHALL BE BASED ON THE FOLLOWING FORMULA:

$$Q_m = Q_r + (Q_c - Q_r)\frac{I-50}{40}$$

WHERE:

RD-7	I=60
RD-10	I=70
RD-20	I=80
RD-30	I=90

Robert J. Leonard
DIRECTOR

SACRAMENTO COUNTY
PUBLIC WORKS AGENCY

DESIGN RUNOFF
RESIDENTIAL

DRAWN BY: MYRA S. FIELDS
SCALE: NONE
DATE: 7/98

9-4

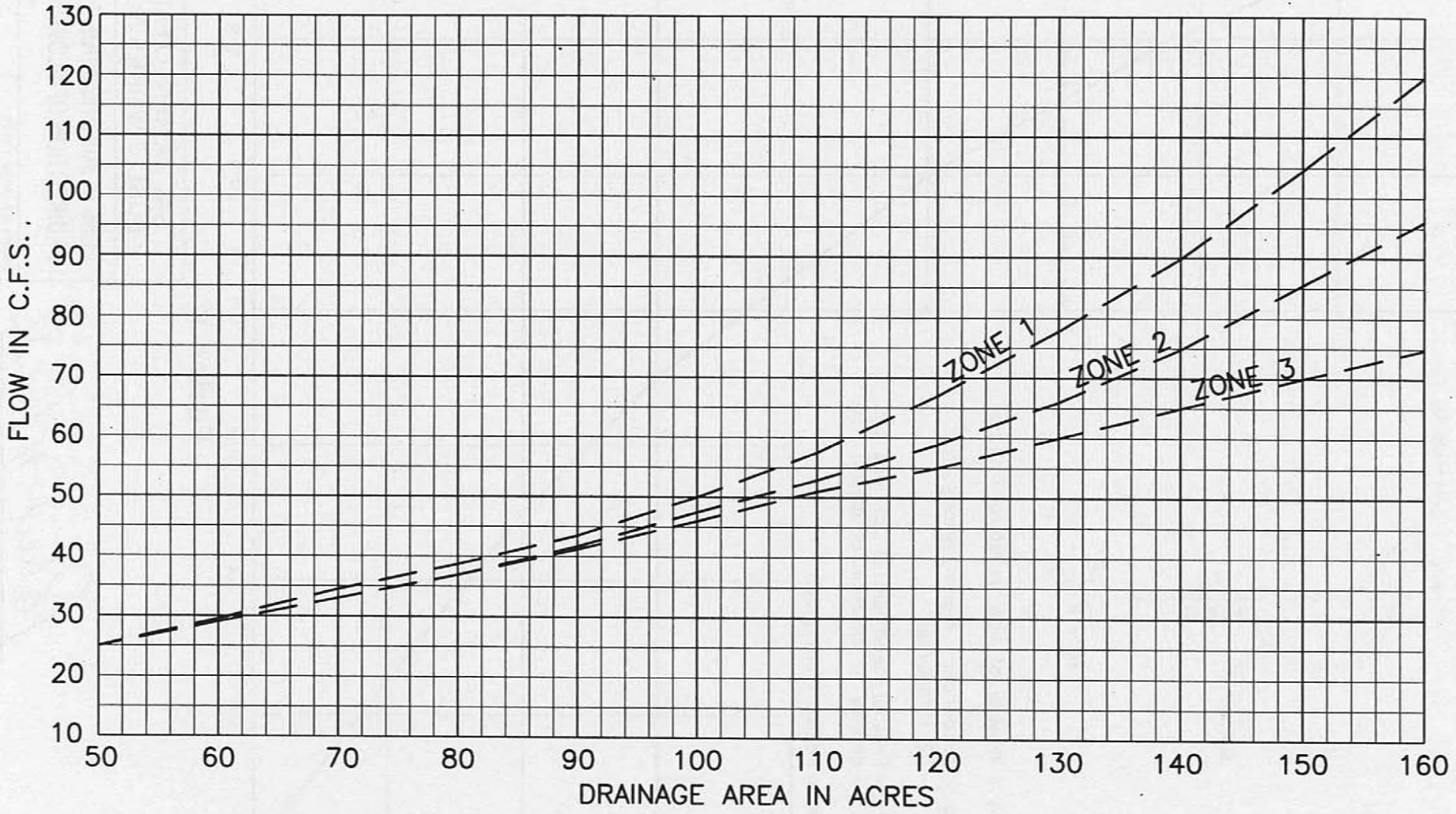

DIRECTOR

SACRAMENTO COUNTY
PUBLIC WORKS AGENCY

DESIGN RUNOFF
COMMERCIAL

DRAWN BY: MYRA S. FIELDS
SCALE: NONE
DATE: 7/98

9-5

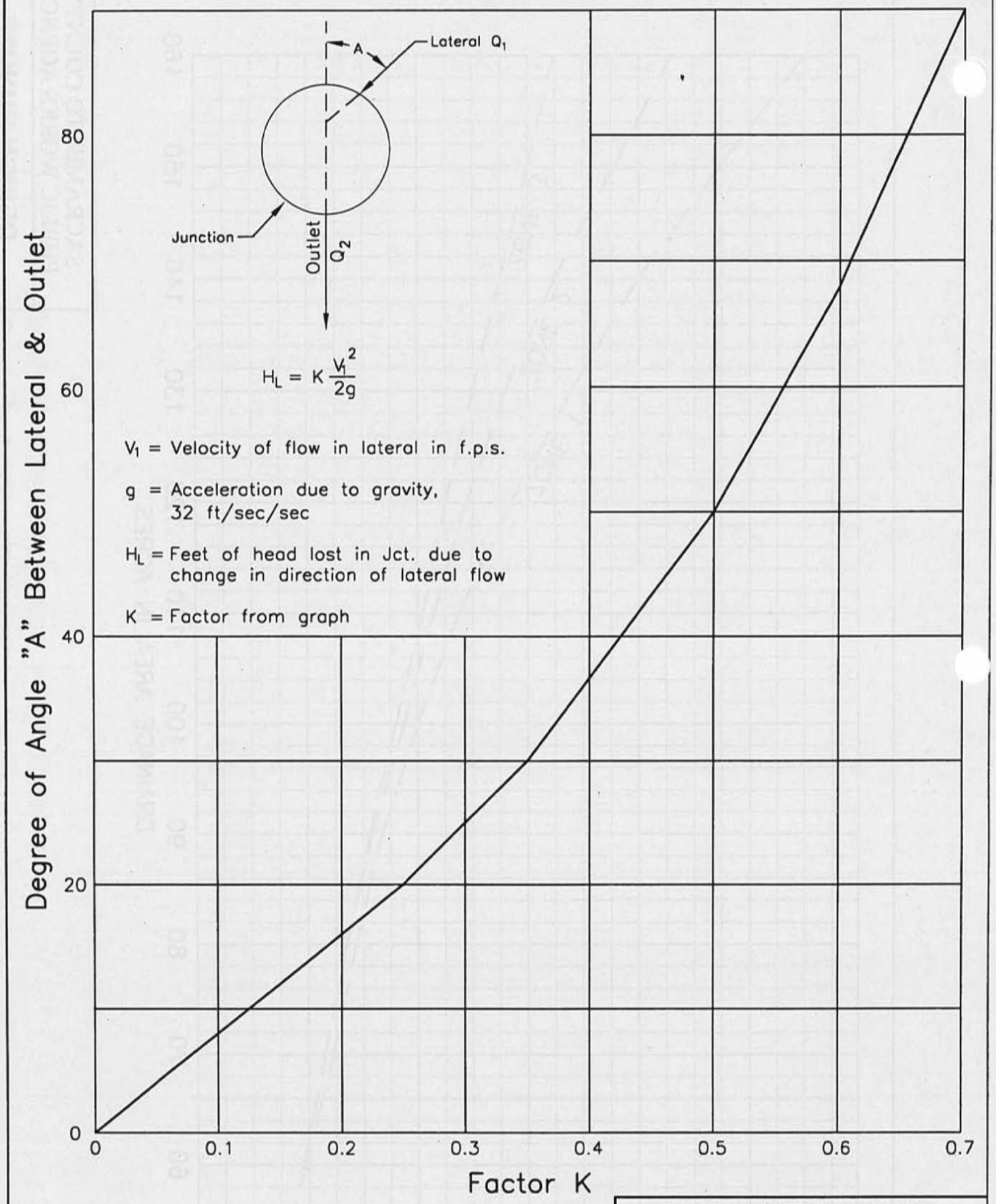

SACRAMENTO COUNTY
PUBLIC WORKS AGENCY

LOSS IN JUNCTION DUE TO CHANGE IN DIRECTION OF FLOW IN LATERAL

DRAWN BY: MYRA FIELDS
SCALE: NONE
DATE: 11/98

9-6

Robert A. Ryan
DIRECTOR

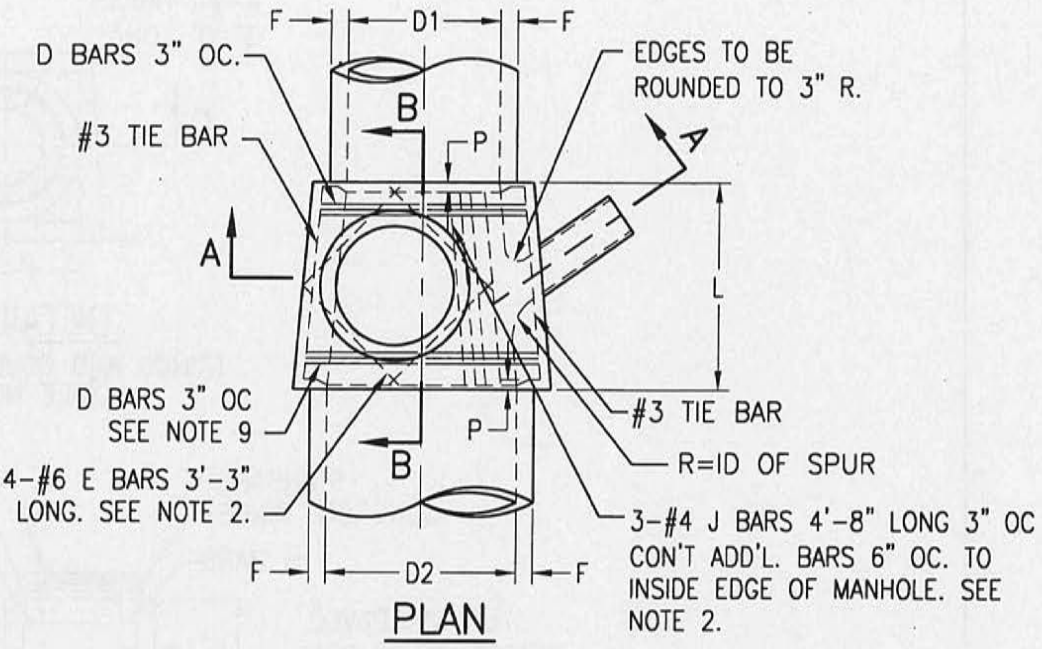

PLAN

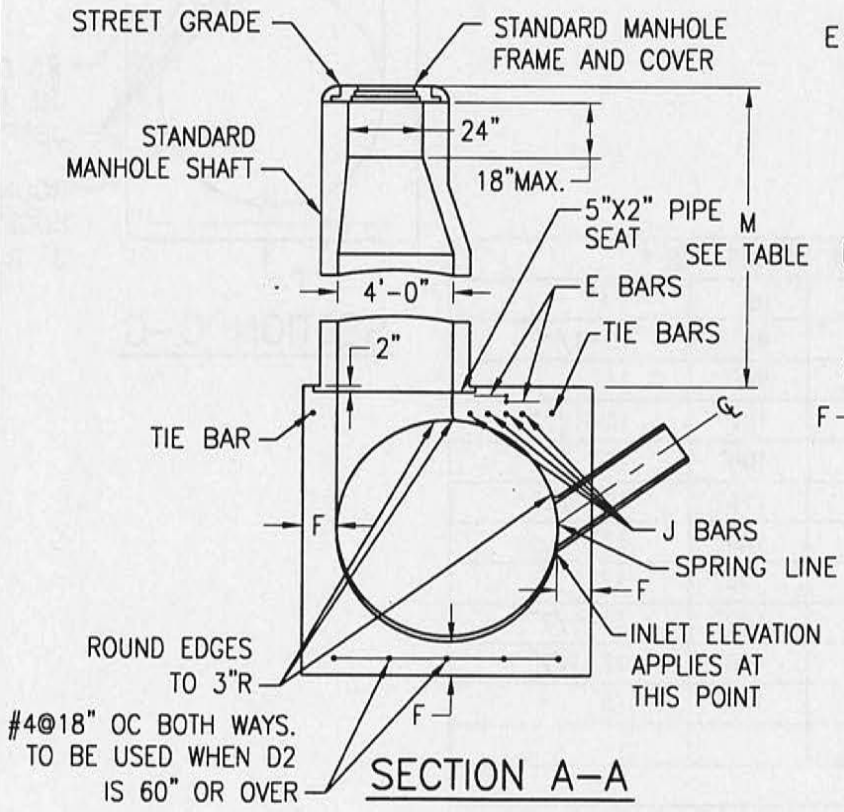

SECTION A–A

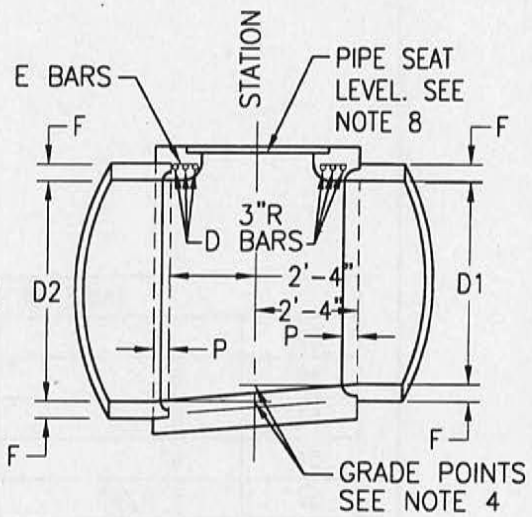

SECTION B–B

Robert J. Shenk

DIRECTOR

SACRAMENTO COUNTY
PUBLIC WORKS AGENCY

TYPE B SADDLE MANHOLE
(MAIN LINE ID=48" OR LARGER)

DRAWN BY: TRU PHAN
SCALE: NONE
DATE: 11/98

9-7
SHEET 1 OF 3

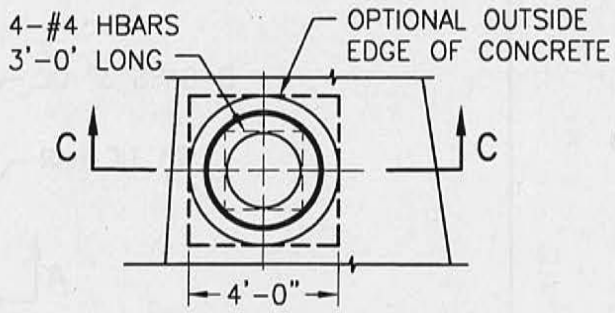

DETAIL "N"

(RINGS AND COVER NOT SHOWN)
(SEE NOTE 1)

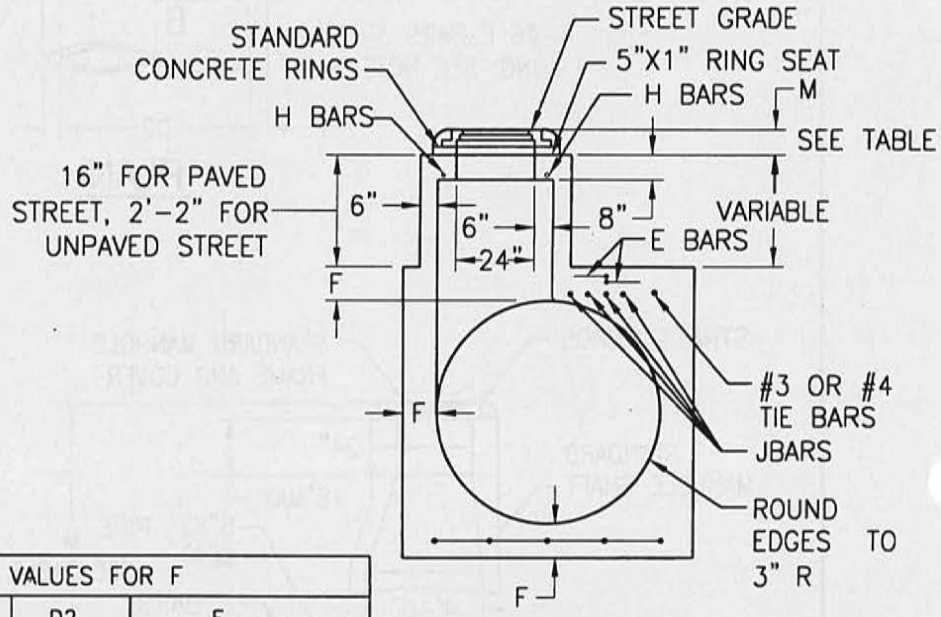

SECTION C-C

TABLE OF VALUES FOR F			
D2	F	D2	F
48"	8"	90"	13-1/4"
51"	8-1/2"	96"	14"
54"	9"	102"	15-1/2"
57"	9-1/4"	108"	16"
60"	9-1/2"	114"	16-1/2"
63"	10"	120"	17"
66"	10-1/4"	126"	17"
69"	10-3/4"	132"	17-1/2"
72"	11"	138"	17-1/2"
78"	11-3/4"	144"	18"
84"	12-1/2"		

TABLE OF VALUES FOR M (SEE NOTE 1)				
SECTION	PAVED STREET		UNPAVED STREET	
	MAX.	MIN.	MAX.	MIN.
A-A		2'-10 1/2"		3'-6"
C-C	11"	8 1/2"	16"	15"

Robert J. Shanks
DIRECTOR

SACRAMENTO COUNTY
PUBLIC WORKS AGENCY

TYPE B SADDLE MANHOLE

(MAIN LINE ID=48" OR LARGER)

DRAWN BY: TRU PHAN
SCALE: NONE
DATE: 11/98

9-7
SHEET 2 OF 3

NOTES

1. WHEN DEPTH M FROM STREET GRADE TO THE TOP OF THE BOX IS LESS THAN 2'-10 1/2" FOR PAVED STREETS OR 3'-6" FOR UNPAVED STREETS, CONSTRUCT MONOLITHIC SHAFT PER SECTION C-C AND DETAIL "N". SHAFT FOR ANY DEPTH OF MANHOLE MAY BE CONSTRUCTED PER SECTION C-C. WHEN DIAMETER D_1 IS 48", CENTER OF SHAFT MAY BE LOCATED PER NOTE 2.

2. CENTER OF MANHOLE SHAFT SHALL BE LOCATED OVER CENTER LINE OF STORM DRAIN WHEN DIAMETER D_1 IS 48" OR LESS. IN WHICH CASE PLACE E BARS SYMMETRICALLY AROUND SHAFT AT 45° WITH CENTER LINE AND OMIT J BARS.

3. L AND P SHALL HAVE THE FOLLOWING VALUES UNLESS OTHERWISE SHOWN ON THE PROJECT DRAWINGS:
   D_2 =96" OR LESS, L=5'-6", P=5"
   D_2 OVER 96", L=6'-0", P=8"
   L MAY BE INCREASED OR LOCATION OF MANHOLE SHIFTED TO MEET PIPE ENDS. WHEN L GREATER THAN THAT SHOWN ABOVE IS SPECIFIED, D BARS SHALL BE CONTINUED 6" OC.

4. STATIONS OF MANHOLES SHOWN ON PROJECT DRAWINGS APPLY AT CENTER LINE OF SHAFT. ELEVATIONS ARE SHOWN AT CENTER LINE OF SHAFT AND REFER TO THE PROLONGED INVERT GRADE LINES.

5. REINFORCEMENT SHALL CONFORM TO ASTM A 615, GRADE 40 AND SHALL TERMINATE 1 1/2" CLEAR OF CONCRETE SURFACES UNLESS OTHERWISE SHOWN.

6. FLOOR OF MANHOLE SHALL BE STEEL TROWELED TO SPRING LINE.

7. BODY OF MANHOLE SHALL BE POURED IN ONE CONTINUOUS OPERATION EXCEPT THAT A CONSTRUCTION JOINT WITH A LONGITUDINAL KEYWAY MAY BE PLACED AT SPRING LINE.

8. THICKNESS OF THE DECK SHALL VARY WHEN NECESSARY TO PROVIDE A LEVEL SEAT BUT SHALL NOT BE LESS THAN THE TABULAR VALUES FOR F SHOWN ON DRAWING 9-7 SHEET 1.

9. D BARS SHALL BE #4 FOR D_2 =39" OR LESS, #5 FOR D_2 =42" TO 84" INCLUSIVE AND #6 FOR D_2 =90" OR OVER.

10. CENTER LINE OF INLET PIPE SHALL INTERSECT INSIDE FACE OF CONE AT SPRING LINE UNLESS OTHERWISE SHOWN.

11. THE FOLLOWING CRITERIA SHALL BE USED FOR THIS MANHOLE:
    A. MAIN LINE=48" INSIDE DIAMETER OR LARGER.

    B. THE OUTSIDE DIAMETER OF THE LATERAL MUST BE LESS THAN OR EQUAL TO 1/2 THE INSIDE DIAMETER OF THE MAIN LINE. IF THE UPSTREAM AND DOWNSTREAM DIAMETERS OF THE MANHOLE ARE NOT THE SAME, THE GOVERNING INSIDE DIAMETER OF THE MAIN LINE SHALL BE CONSIDERED TO BE THAT WHERE THE EXTENDED CENTER LINE OF THE LATERAL ENTERS THE MANHOLE.

    C. IN NO INSTANCE SHALL THE INSIDE DIAMETER OF THE LATERAL TO THE MANHOLE BE GREATER THAN 30".

Robert J. Shank
DIRECTOR

SACRAMENTO COUNTY
PUBLIC WORKS AGENCY

MANHOLE PIPE TO PIPE

(MAIN LINE ID 48" OR LARGER)

DRAWN BY: MYRA FIELDS
SCALE: NONE
DATE: 11/98

9-7
SHEET 3 OF 3

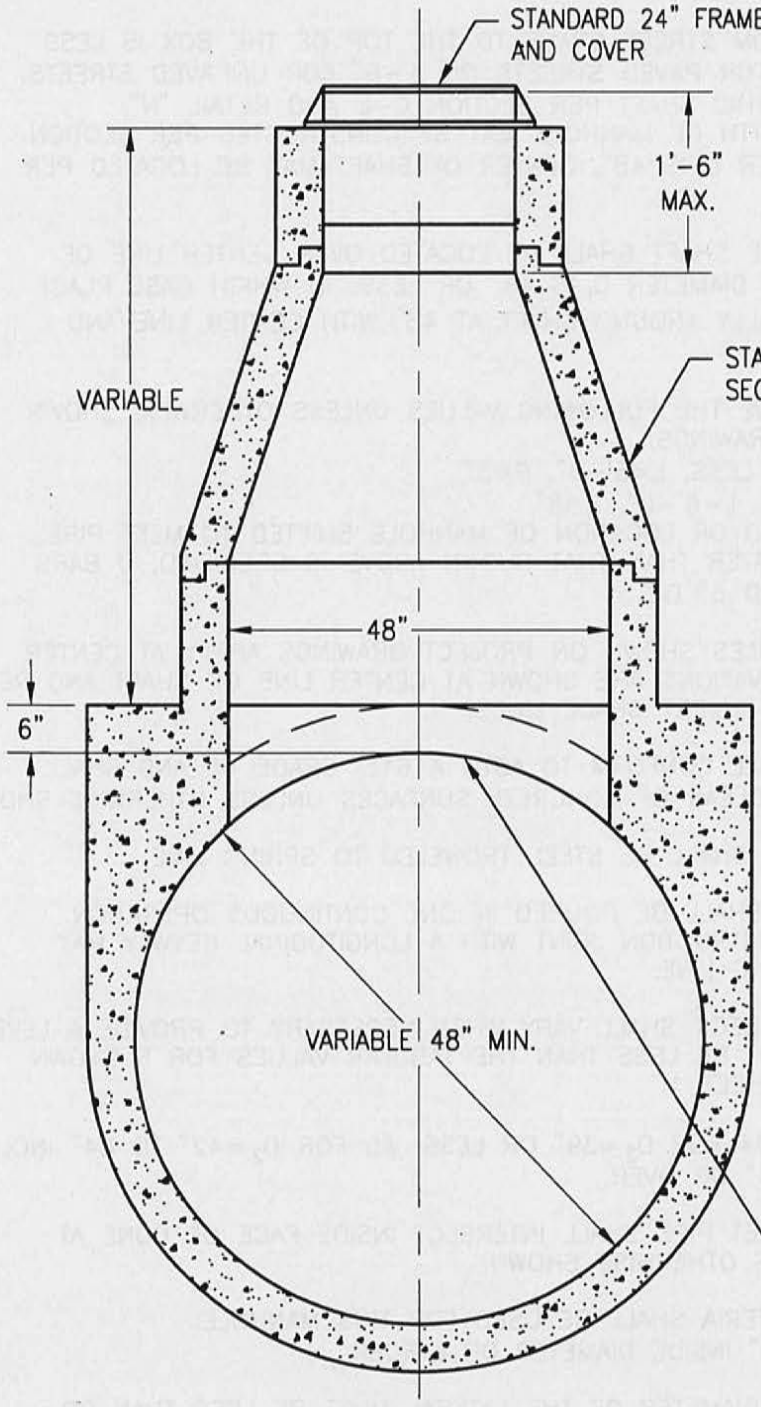

NOTE:
REMOVE CONCRETE IN MANHOLE OPENING AND CONSTRUCT RISER BASE WHILE CONCRETE IS STILL FRESH.

PLACE RISER SECTION AFTER CONCRETE HAS SET.

TYPE A
CAST-IN-PLACE PIPE ONLY

DIRECTOR

SACRAMENTO COUNTY
PUBLIC WORKS AGENCY

TYPE A
SADDLE MANHOLE

DRAWN BY: MYRA FIELDS
SCALE: NONE
DATE: 11/98

9-8

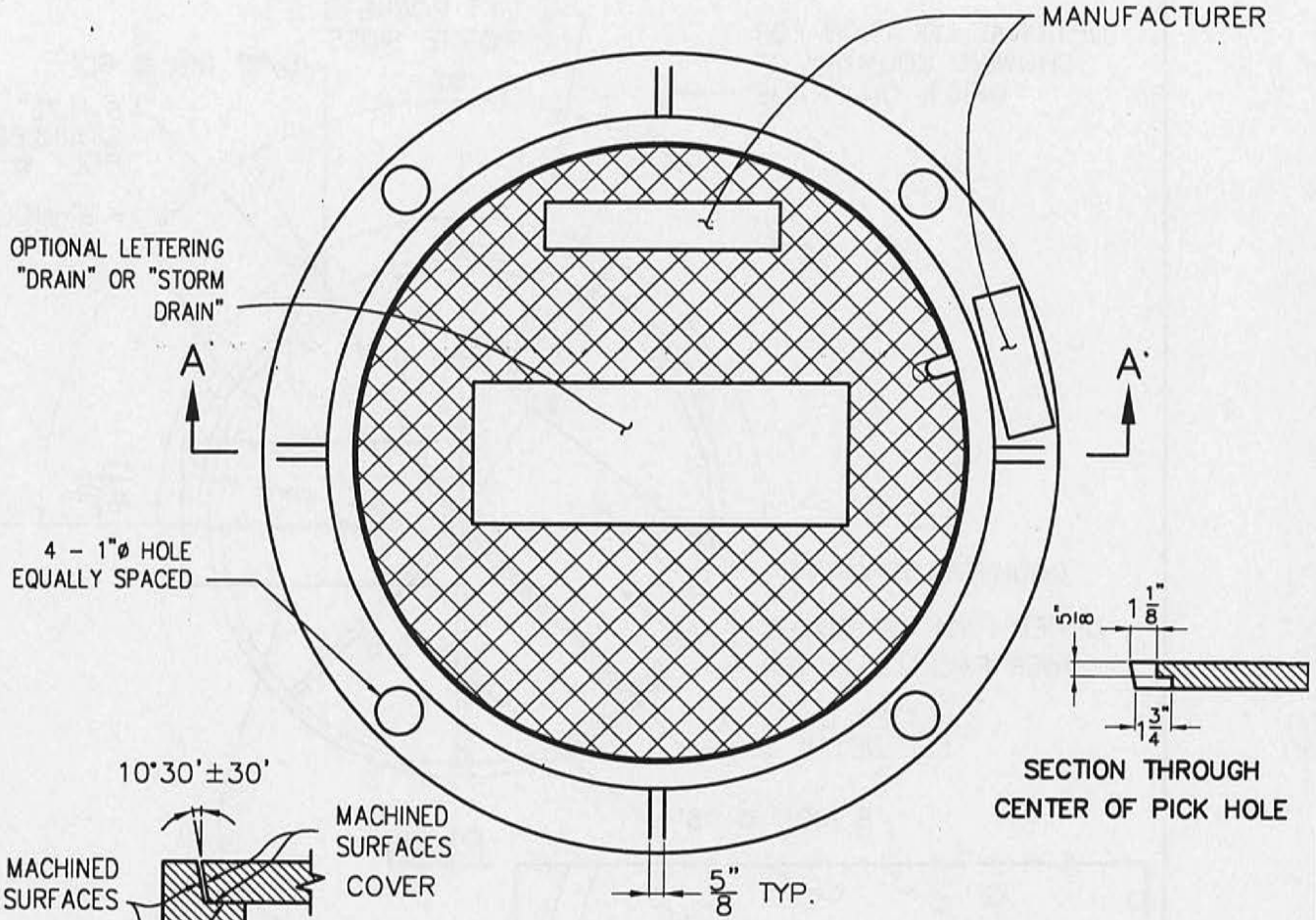

SECTION A–A

NOTES:

1. ALL CASTINGS TO CONFORM TO ASTM A48, CLASS 35B.
2. FRAME AND COVER TO MEET H-20 LOAD SPECIFICATIONS.
3. MACHINED HORIZONTAL AND VERTICAL BEARING SURFACES NOT TO EXCEED 1/64" TOLERANCE.
4. FRAME AND COVER SHALL HAVE A COATING OF BLACK BITUMINOUS PAINT.
5. LOCKING COVER TYPE FRAME AND COVERS SHALL BE USED IN EASEMENT AREAS UNLESS OTHERWISE APPROVED.

Robert J. Shanks
DIRECTOR

SACRAMENTO COUNTY
PUBLIC WORKS AGENCY

GREY CAST IRON STANDARD 24" MANHOLE FRAME & COVER

DRAWN BY: DAH
SCALE: NONE
DATE: 4/97

9-9

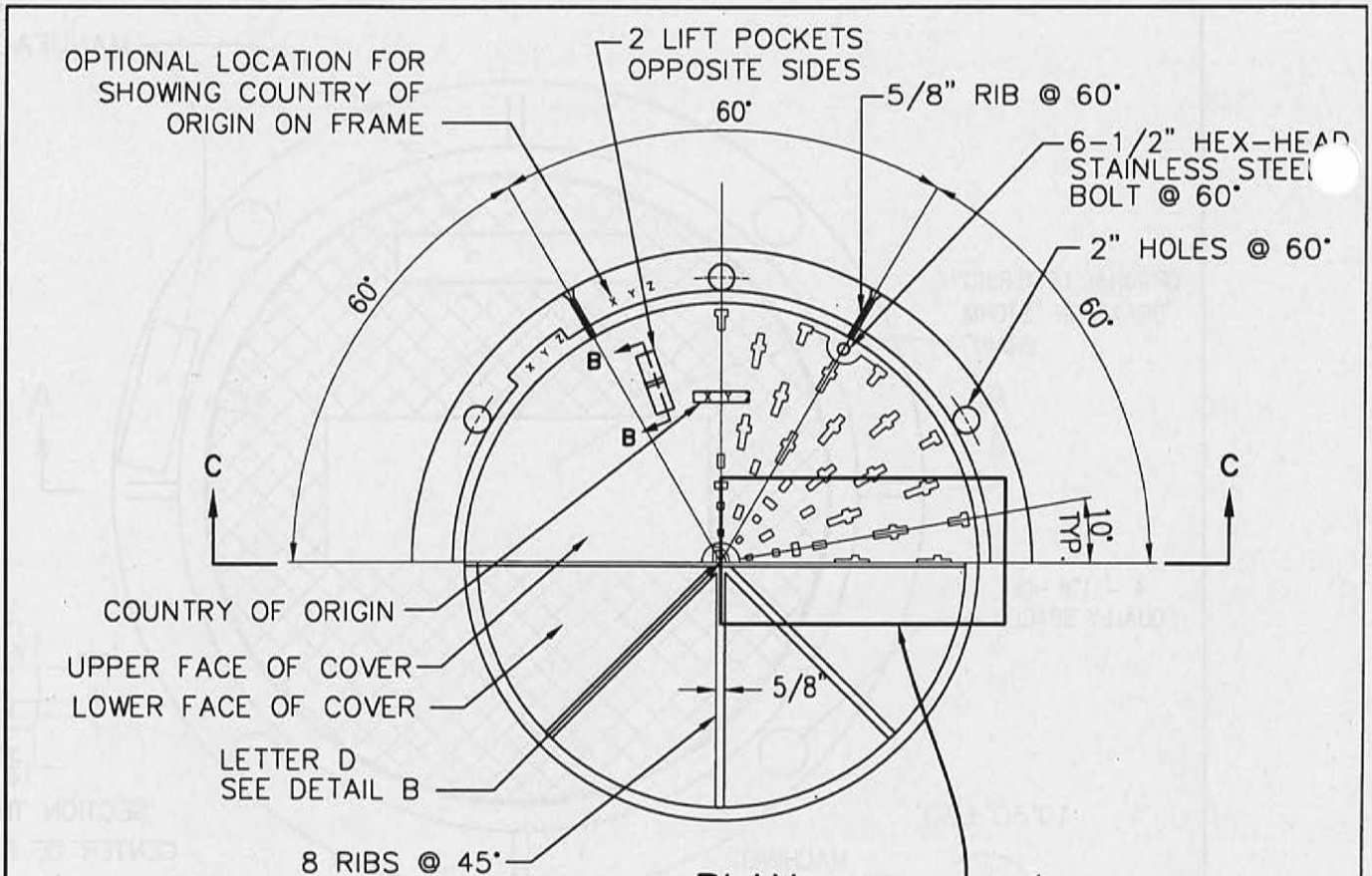

PLAN

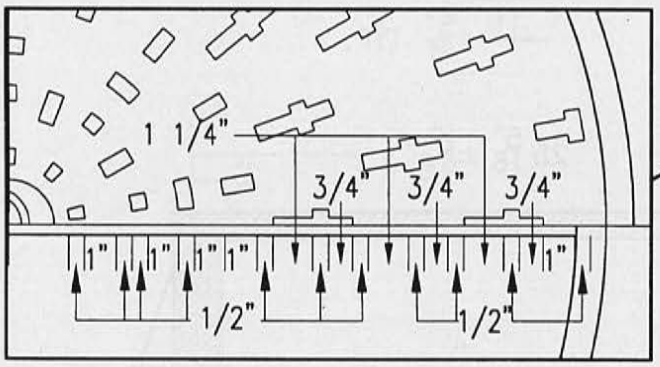

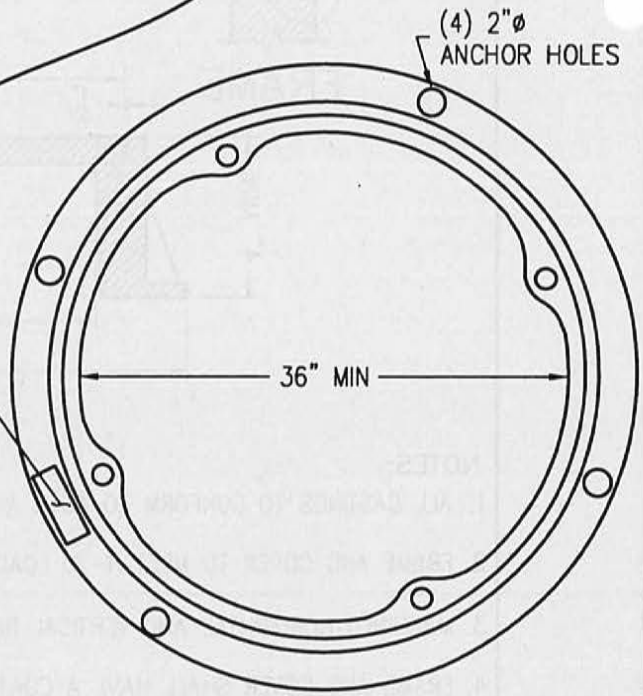

MANUFACTURER

NOTES:

1. ALL CASTINGS TO CONFORM TO ASTM A48, CLASS 35B.
2. FRAME AND COVER TO MEET H-20 LOAD SPECIFICATIONS.
3. MACHINED HORIZONTAL AND VERTICAL BEARING SURFACES NOT TO EXCEED 1/64" TOLERANCE.
4. FRAME AND COVER SHALL HAVE A COATING OF BLACK BITUMINOUS PAINT.
5. LOCKING COVER TYPE FRAME AND COVERS SHALL BE USED IN EASEMENT AREAS UNLESS OTHERWISE APPROVED.

Robert J. Shanks
DIRECTOR

SACRAMENTO COUNTY
PUBLIC WORKS AGENCY

GREY CAST IRON STANDARD 36" MANHOLE FRAME & COVER

DRAWN BY: TRU PHAN
SCALE: NONE
DATE: 1/99

9-10
SHEET 1 OF 2

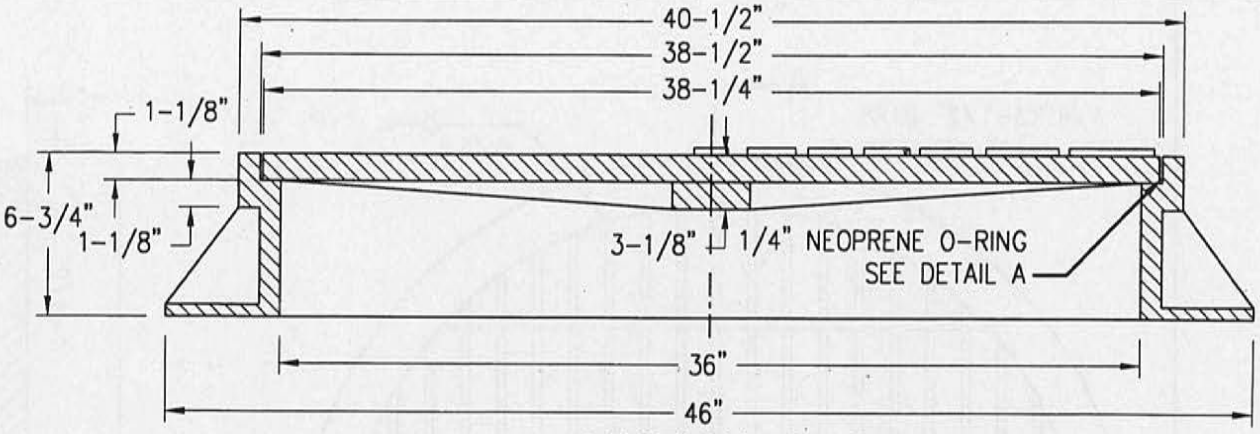

SECTION C–C

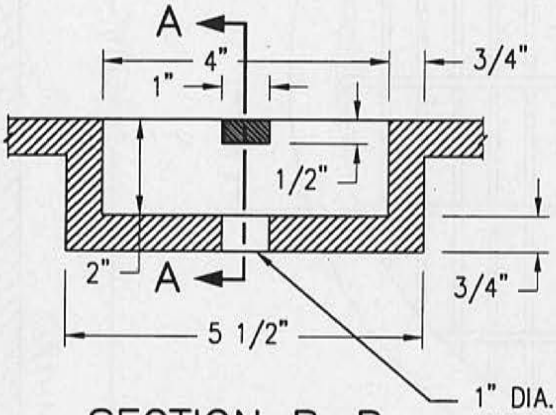

SECTION B–B
NTS.

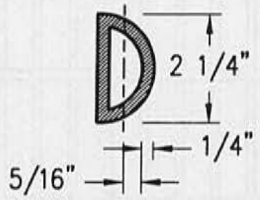

DETAIL B
NTS.

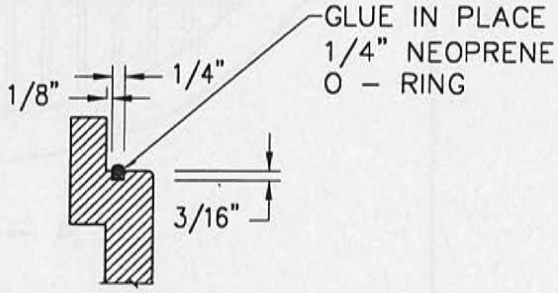

DETAIL A
NTS.

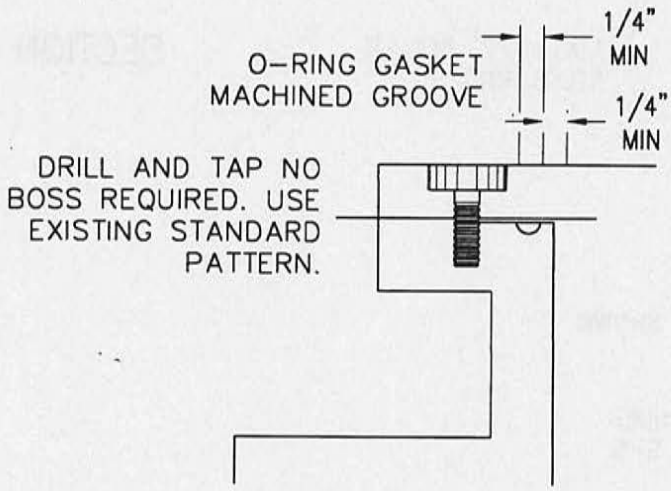

BOLT DOWN COVER DETAIL
NTS.

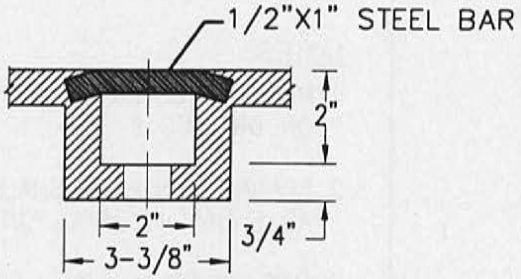

SECTION A–A
NTS.

Robert H. Leonard
DIRECTOR

SACRAMENTO COUNTY
PUBLIC WORKS AGENCY

GREY CAST IRON STANDARD 36" MANHOLE FRAME & COVER

DRAWN BY: TRU PHAN
SCALE: NONE
DATE: 4/98

9-10
SHEET 2 OF 2

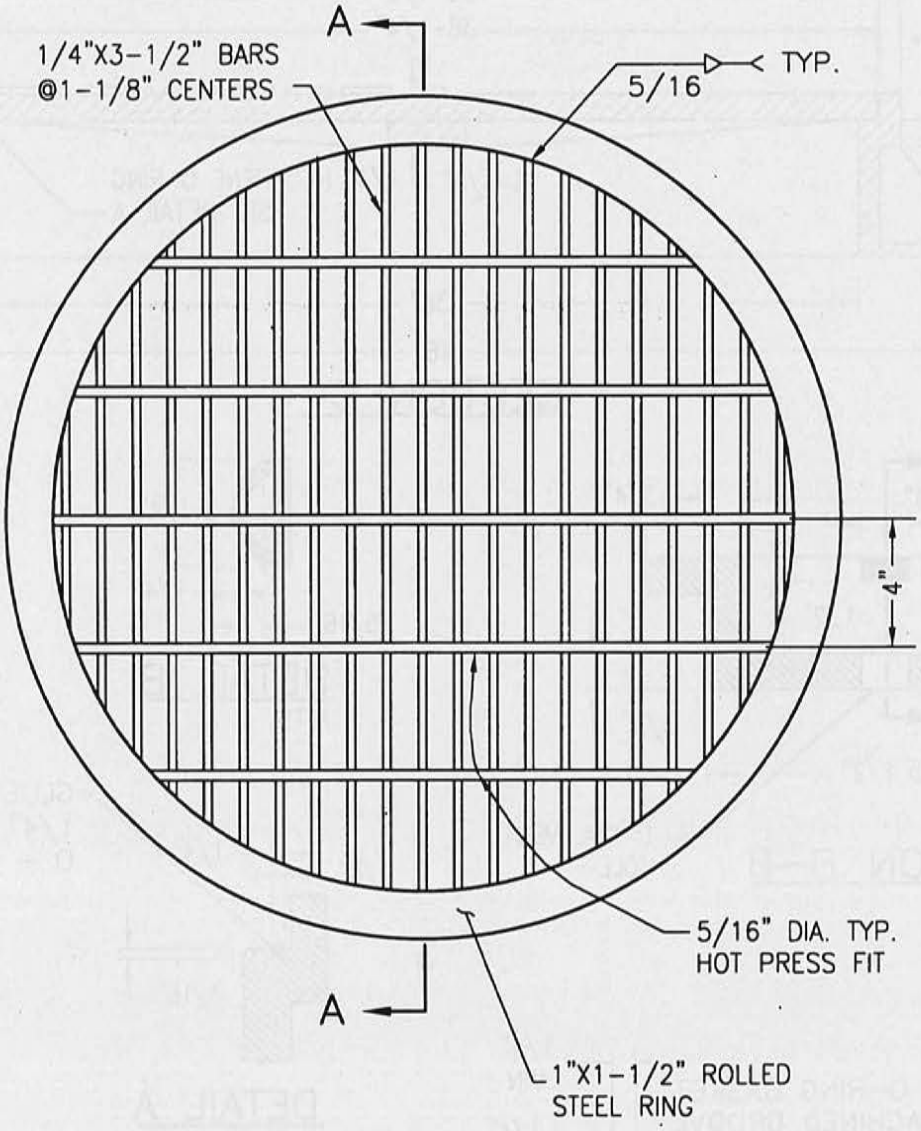

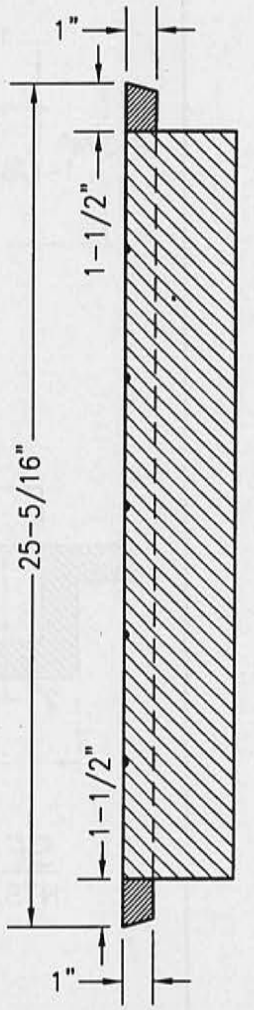

SECTION A–A

NOTES

1. MANHOLE COVER SHALL FIT FRAME SHOWN ON DRAWING 9–9.
2. SEATING SURFACES SHALL BE MACHINED AS SHOWN IN DETAIL ON DRAWING 9–9.
3. THIS COVER MAY BE USED ONLY WITH APPROVAL OF DIRECTOR.
4. GALVANIZE AFTER FABRICATION

Robert J. Shank

DIRECTOR

SACRAMENTO COUNTY
PUBLIC WORKS AGENCY

GRATE TYPE MANHOLE COVER

DRAWN BY: MYRA FIELDS
SCALE: NONE
DATE: 11/98

9-11

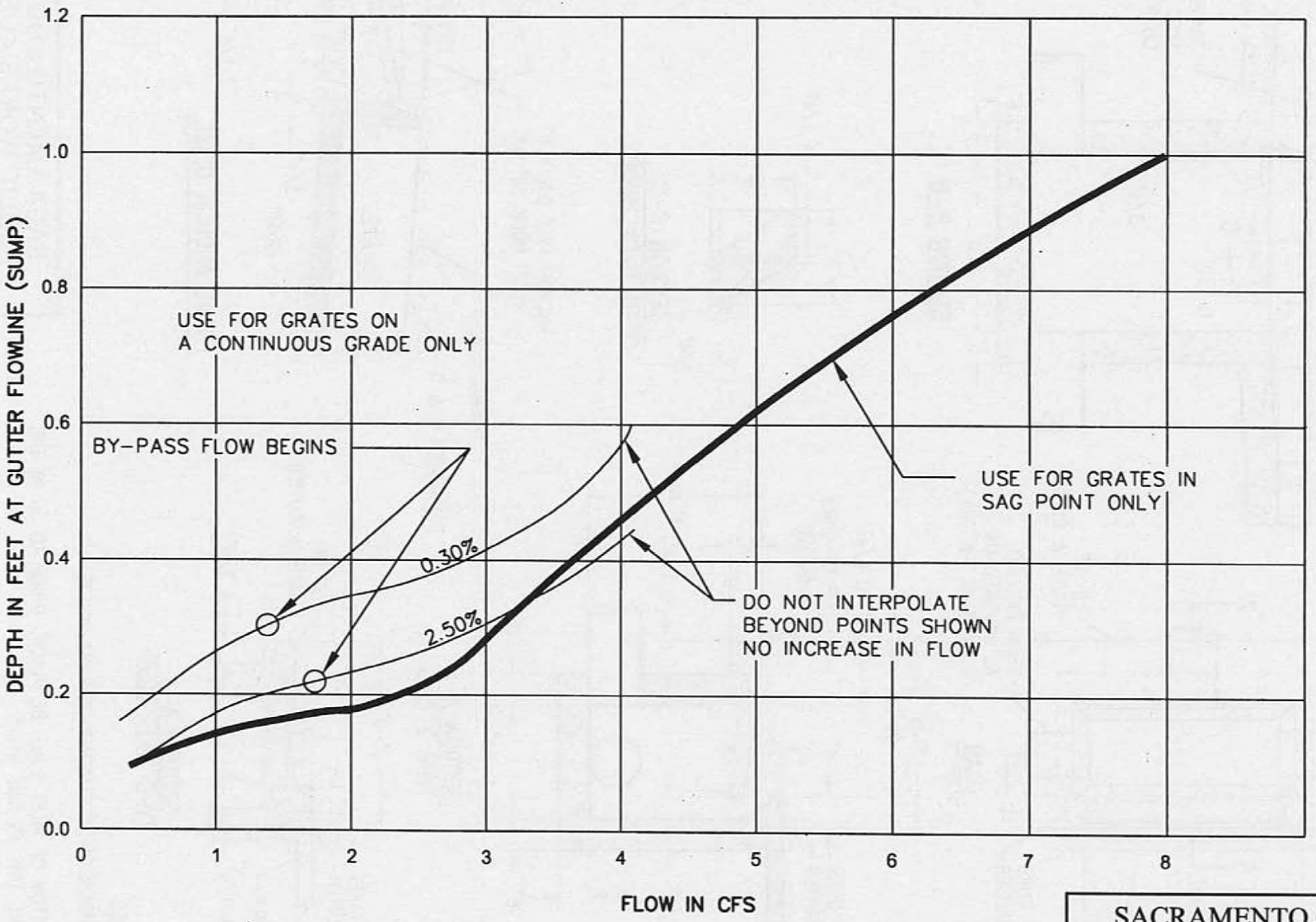

DIRECTOR

SACRAMENTO COUNTY
PUBLIC WORKS AGENCY

FLOW CAPACITY
TYPE B GRATE

DRAWN BY: TRU PHAN
SCALE: NONE
DATE: 7/98

9-12

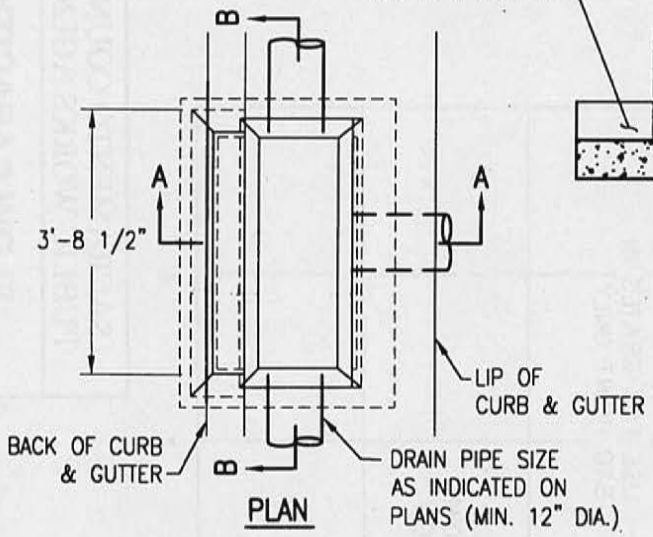

PLAN

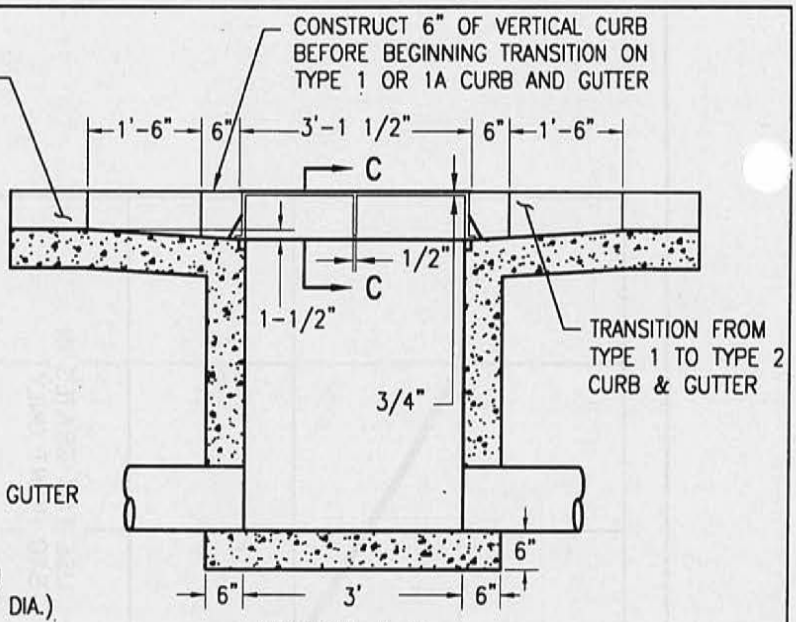

SECTION B–B

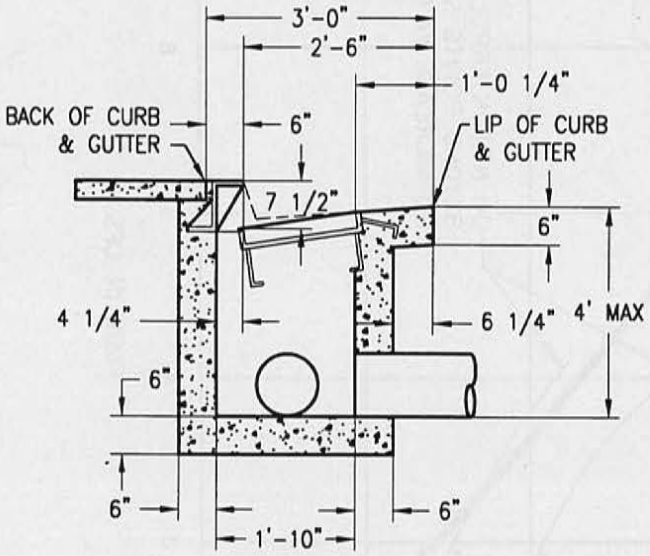

SECTION A–A
TYPE 2 C&G

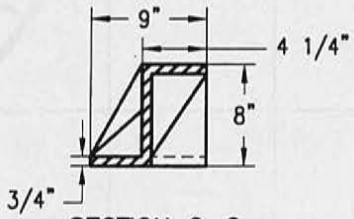

SECTION C–C
OPEN–BACK HOOD

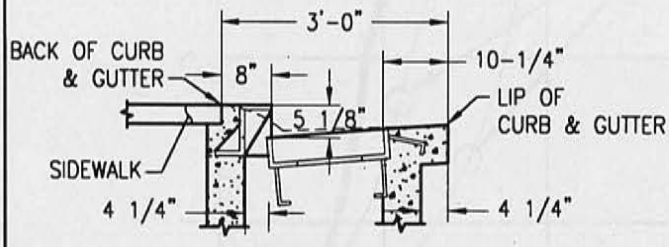

SECTION A–A
TYPE 1&1A C&G

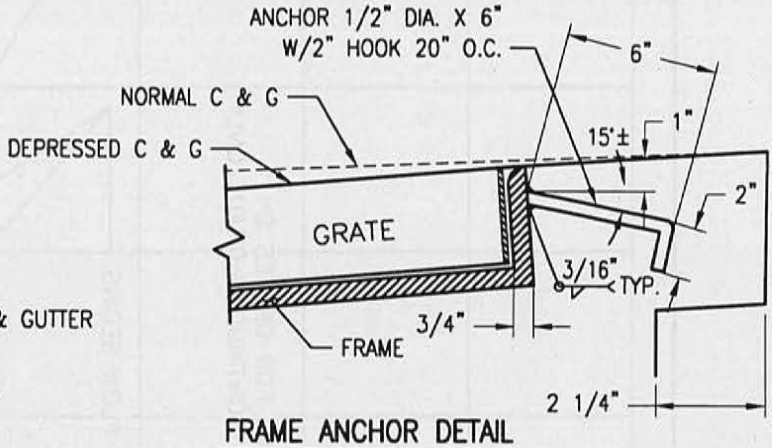

FRAME ANCHOR DETAIL

NOTES

1. DEPRESSION IS STANDARD FOR ALL INLETS
2. BOTTOM OF INLET SHALL BE PLACED PRIOR TO OR AT THE SAME TIME AS SIDE WALLS.
3. FRAME AND GRATE SHALL CONFORM TO DRAWINGS 9–14 AND 9–15.
4. OPEN–BACK HOOD SHALL BE CAST IRON.

Robert J. Shank
DIRECTOR

SACRAMENTO COUNTY
PUBLIC WORKS AGENCY

DROP INLET
TYPE B

DRAWN BY: STAFF
SCALE: NONE
DATE: 11/98

9-13

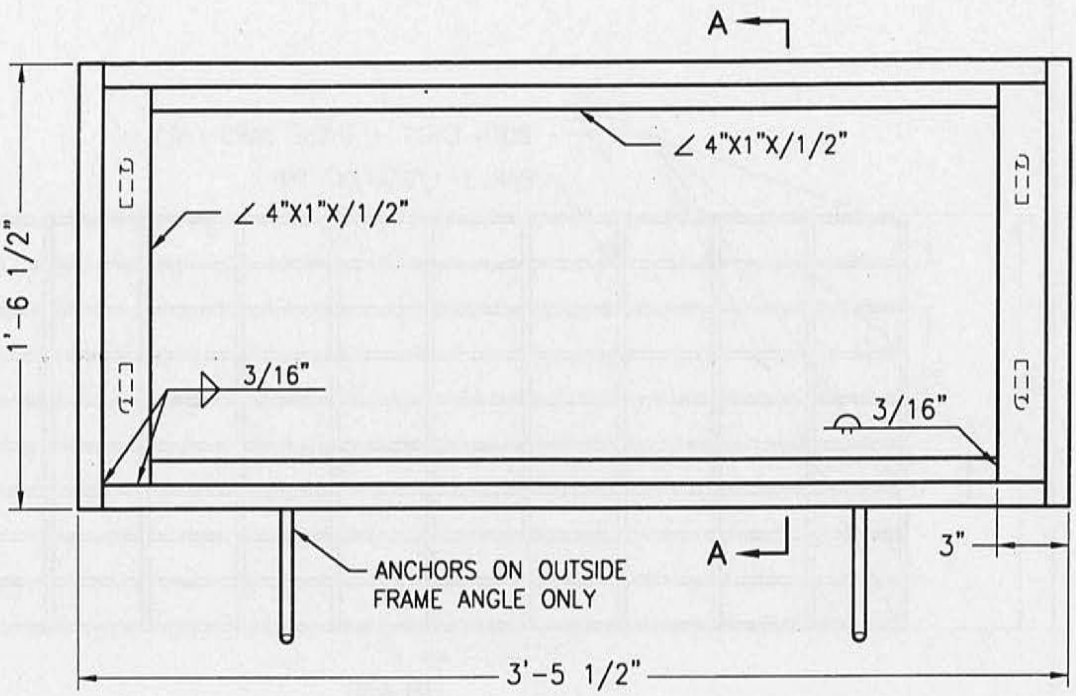

PLAN

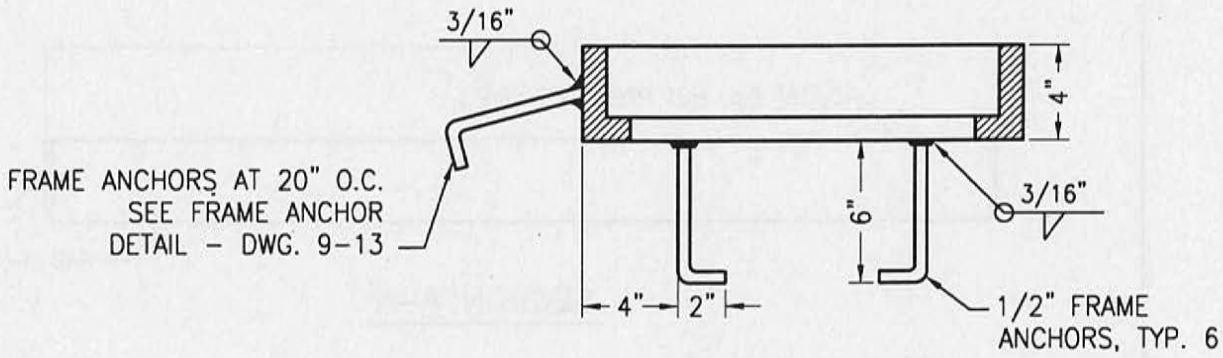

SECTION A-A

NOTES:

1. HOT DIP GALVANIZE ALL PARTS AFTER FABRICATION PER ASTM A123.
2. OMIT 1/2" FRAME ANCHORS OVER CENTER SUPPORT ASSEMBLY WHEN MULTIPLE FRAMES ARE USED.
3. MATERIAL: ASTM A36 MILD STEEL

Robert J. Shanks

DIRECTOR

SACRAMENTO COUNTY
PUBLIC WORKS AGENCY

WELDED STEEL GRATE FRAME

DRAWN BY: MYRA FIELDS
SCALE: NONE
DATE: 11/98

9-14

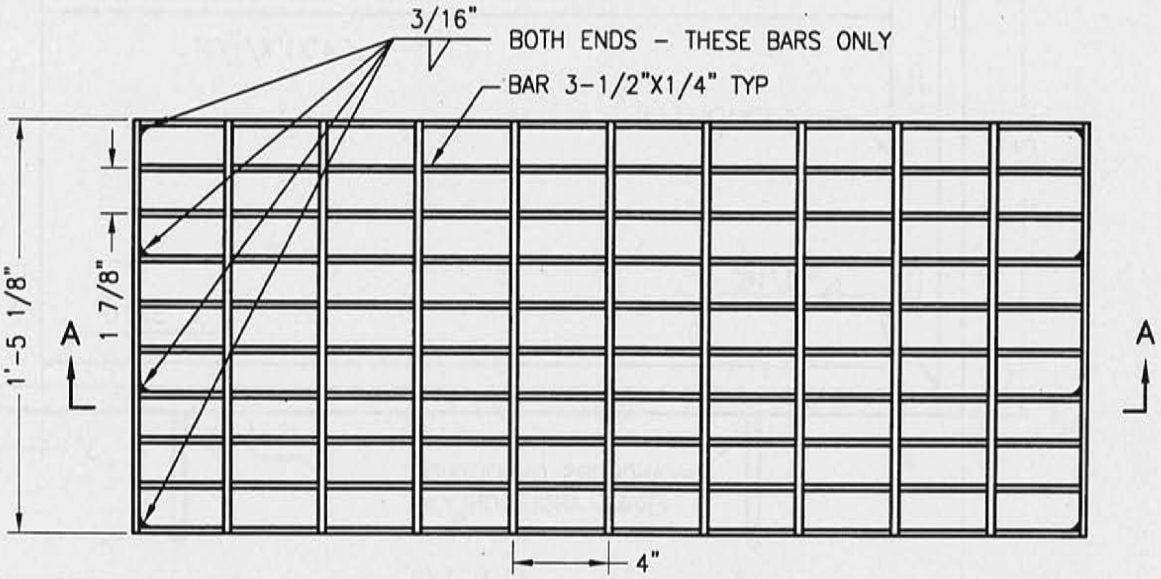

PLAN

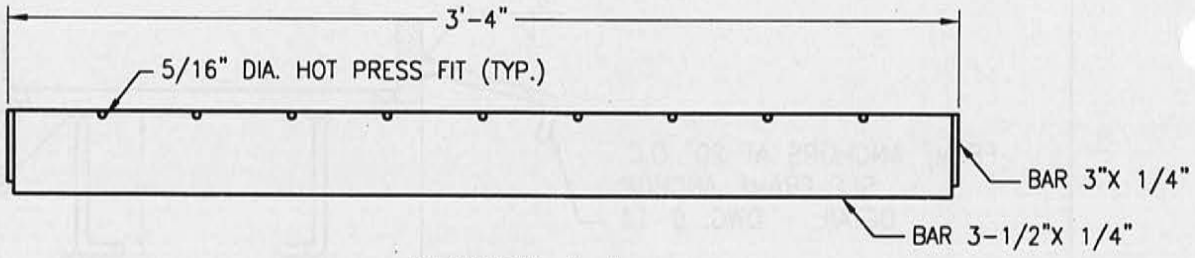

SECTION A–A

NOTES:
1. HOT DIP GALVANIZE ALL PARTS AFTER FABRICATION.

2. DIMENSIONS TO CENTERLINE OF BARS UNLESS OTHERWISE NOTED.

DIRECTOR

SACRAMENTO COUNTY
PUBLIC WORKS AGENCY

WELDED STEEL GRATE

DRAWN BY: MYRA FIELDS
SCALE: NONE
DATE: 11/98

9-15

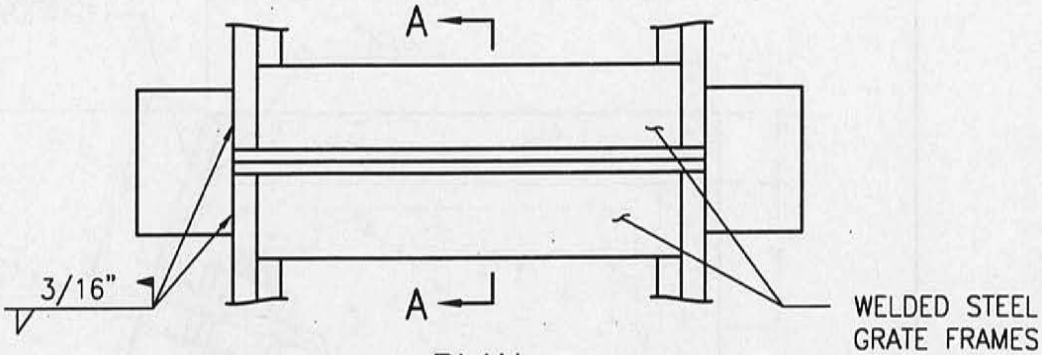

PLAN

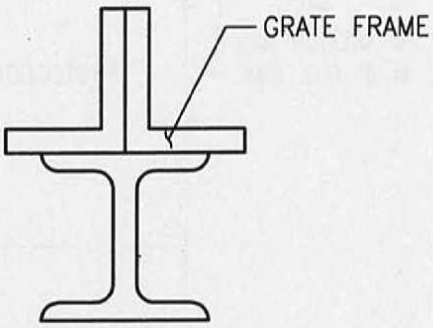

SECTION A–A

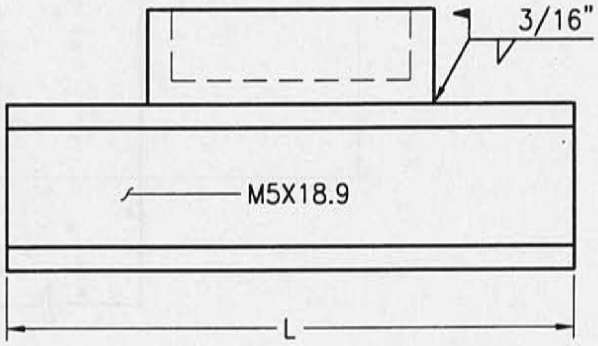

ELEVATION

NOTES:

1. OMIT 1/2" FRAME ANCHORS OVER CENTER SUPPORT

2. L=57 INCHES FOR CURB OPENING CATCH BASIN WITH GRATING(S) AND DEBRIS SKIMMER (STANDARD PLAN 301).

DIRECTOR

SACRAMENTO COUNTY
PUBLIC WORKS AGENCY

CENTER SUPPORT ASSEMBLY FOR MULTIPLE GRATES

DRAWN BY: MYRA FIELDS
SCALE: NONE
DATE: 11/98

9-16

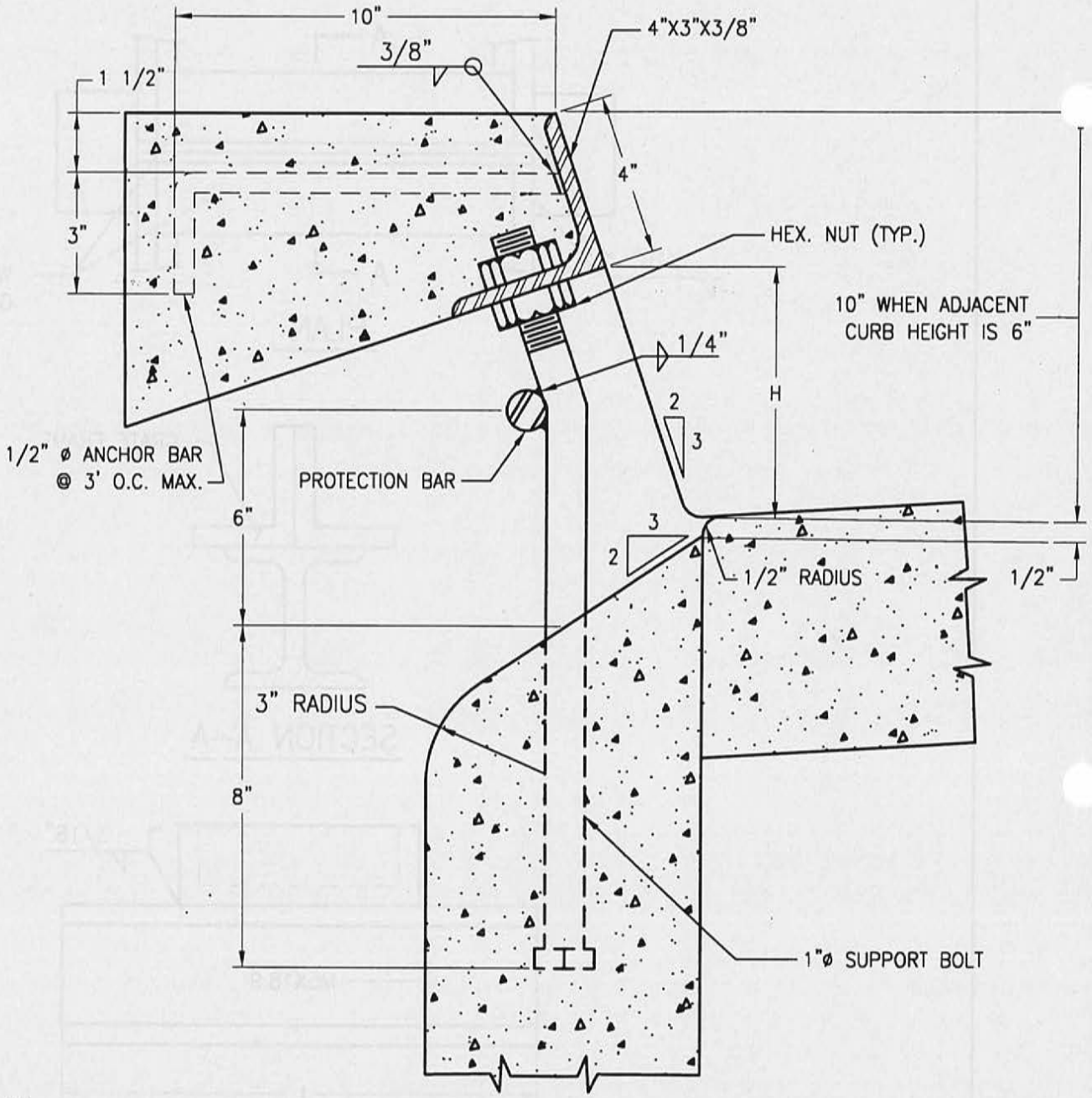

NOTES:

1. FACE ANGLE SHALL BE CAST INTO STRUCTURE CONTINUOUS FOR THE FULL LENGTH "W".
2. ALL EXPOSED METAL PARTS TO BE HOT-DIPPED GALVANIZED AFTER FABRICATION.
3. WHEN CURB INLET OPENING HEIGHT (H) EXCEEDS 6" INSTALL 1" ø STEEL PROTECTION BAR.
4. INSTALL ADDITIONAL BARS AT 3-1/2" CLEAR SPACING ABOVE FIRST BAR WHEN OPENING EXCEEDS 13".
5. WHEN CURB INLET OPENING LENGTH EXCEEDS 8' INSTALL 1" ø STEEL SUPPORT BOLTS, SPACED AT NOT MORE THAN 5' O.C.

Robert H. Shanks
DIRECTOR

SACRAMENTO COUNTY
PUBLIC WORKS AGENCY

CATCH BASIN FACE PLATE ASSEMBLY AND PROTECTION BAR

DRAWN BY: MYRA FIELDS
SCALE: NONE
DATE: 11/98

9-17

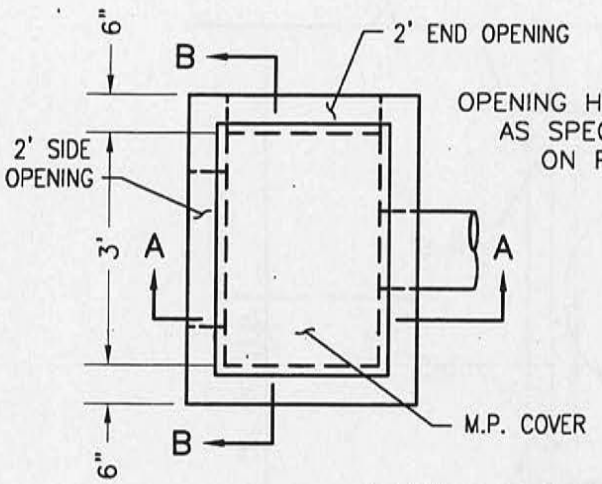

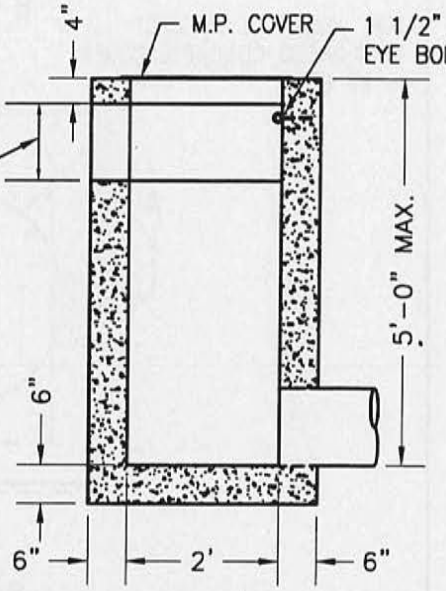

SECTION A–A

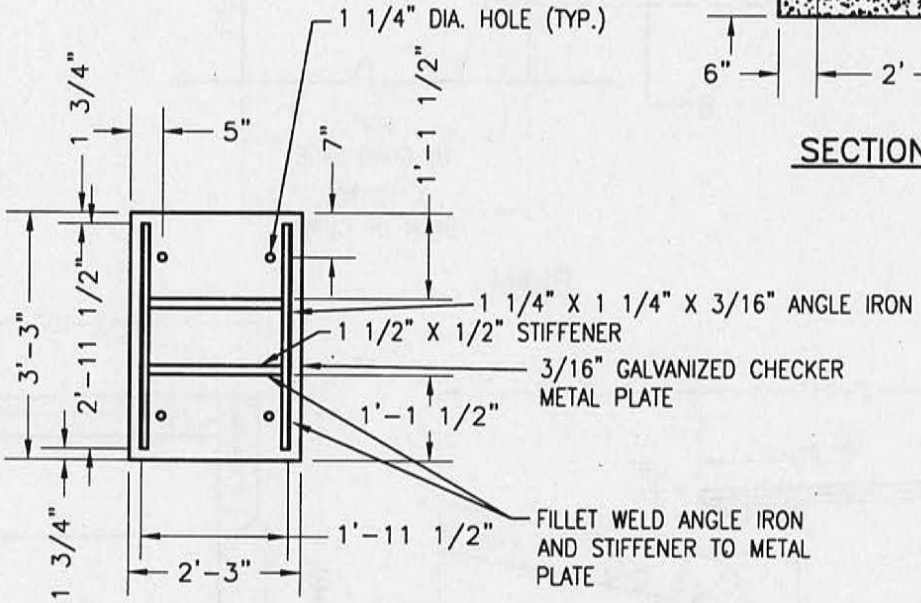

METAL COVER (UNDERSIDE)

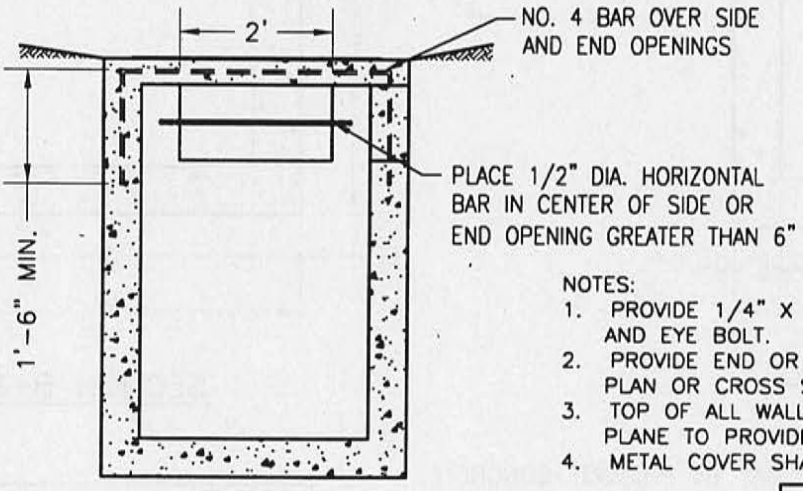

SECTION B–B

NOTES:
1. PROVIDE 1/4" X 18" GALV. CHAIN WELD TO COVER AND EYE BOLT.
2. PROVIDE END OR SIDE OPENINGS AS SHOWN ON PLAN OR CROSS SECTION
3. TOP OF ALL WALLS TO BE FINISHED TO A FLAT PLANE TO PROVIDE EVEN BEARING FOR PLATE COVER.
4. METAL COVER SHALL BE GALVANIZED

Robert T. Thomas
DIRECTOR

SACRAMENTO COUNTY
PUBLIC WORKS AGENCY

DROP INLET TYPE F

DRAWN BY: STAFF
SCALE: NONE
DATE: 11/98

9-18

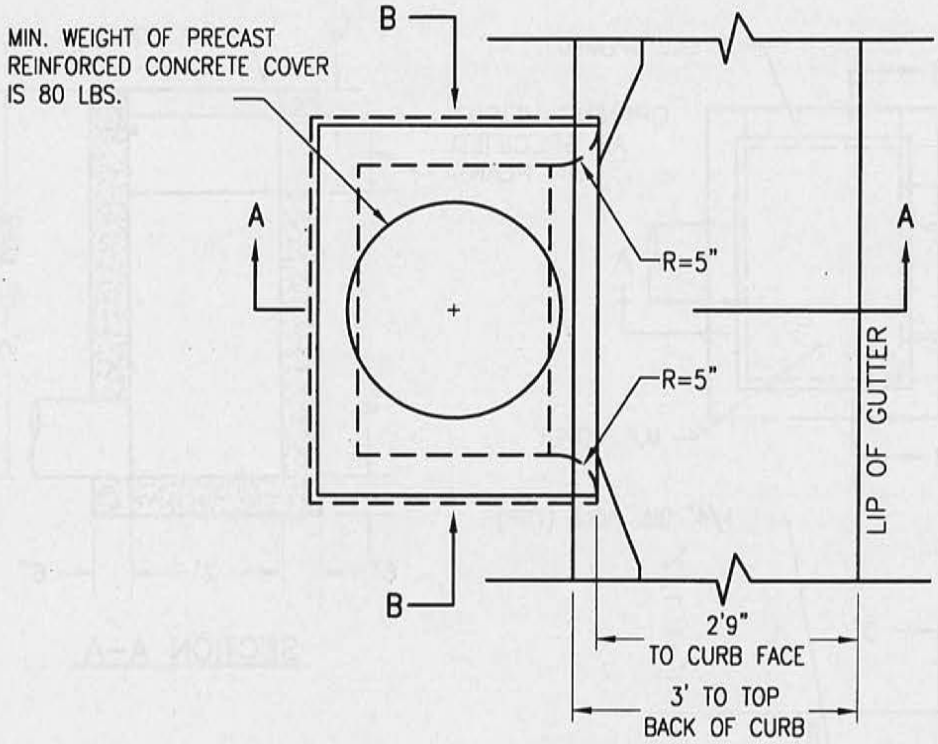

PLAN

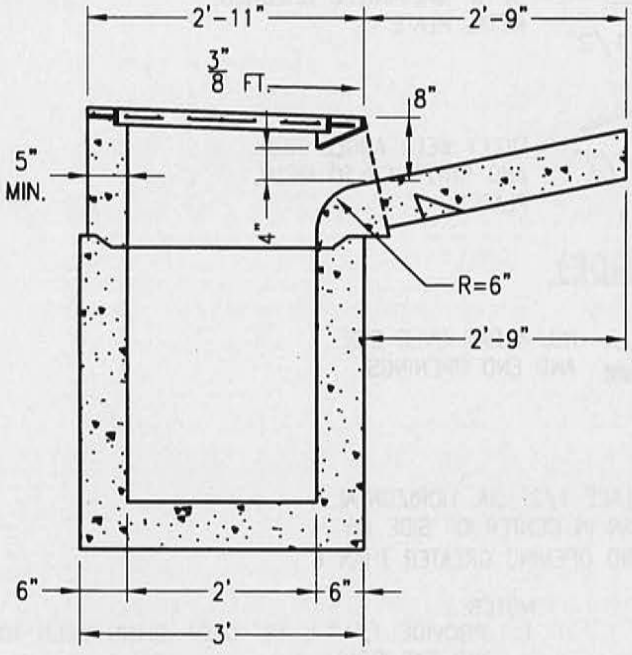

SECTION A–A

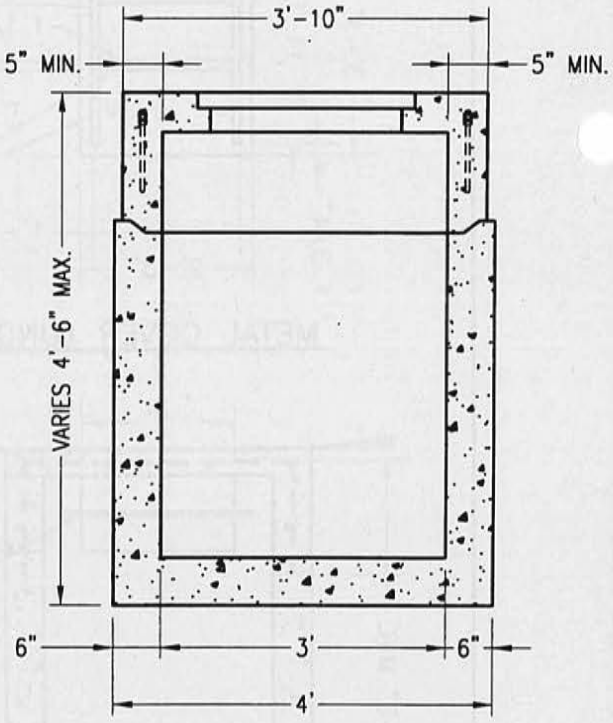

SECTION B–B

NOTES:

1. CURB INLET ASSEMBLY MAY BE PRECAST CONCRETE, FIBERGLASS FORMLINER WITH CLASS "B" P.C.C. OR FORMED AND CAST-IN-PLACE P.C.C.
2. ALL METAL SHALL BE HOT DIPPED GALVANIZED. ASTM A123.

Robert J. Shank
DIRECTOR

SACRAMENTO COUNTY
PUBLIC WORKS AGENCY

DROP INLET
TYPE G

Type 2 C & G Only

DRAWN BY: STAFF
SCALE: NONE
DATE: 11/98

9-19

SHEET 1 OF 2

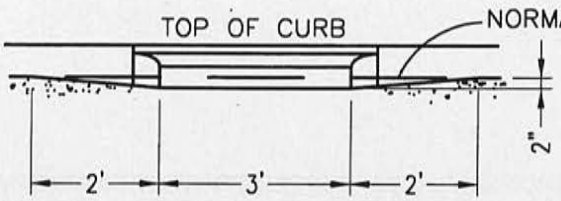

GUTTER TRANSITION ELEVATION

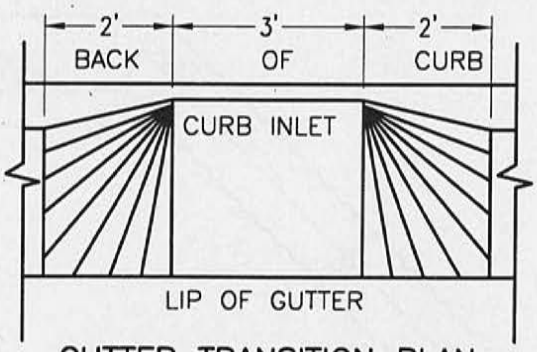

GUTTER TRANSITION PLAN

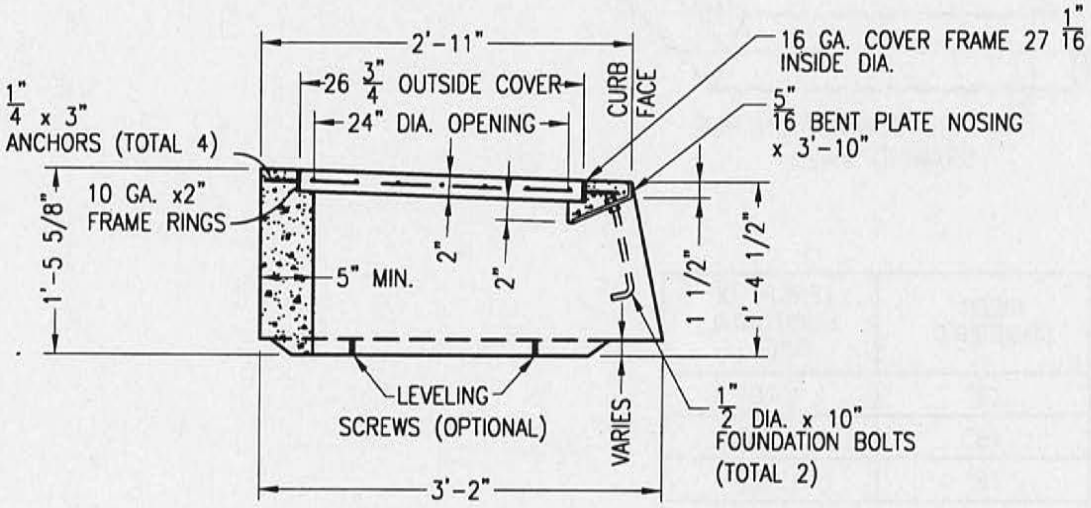

CURB INLET DETAIL

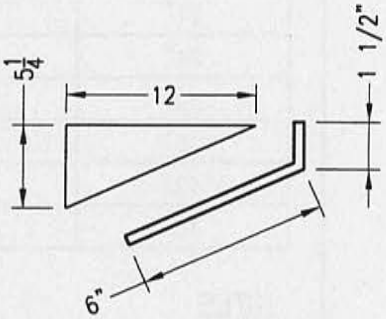

5/16" BENT PLATE NOSING x 3'-10"

NOTES:
1. CURB INLET ASSEMBLY MAY BE PRECAST CONCRETE, FIBERGLASS FORMLINER WITH CLASS "B" P.C.C. OR FORMED AND CAST-IN-PLACE P.C.C.

2. ALL METAL SHALL BE HOT DIPPED GALVANIZED. ASTM A123

Robert J. Shank
DIRECTOR

SACRAMENTO COUNTY
PUBLIC WORKS AGENCY

DROP INLET
TYPE G
Type 2 C & G Only

DRAWN BY: STAFF
SCALE: NONE
DATE: 11/98

9-19
SHEET 2 OF 2

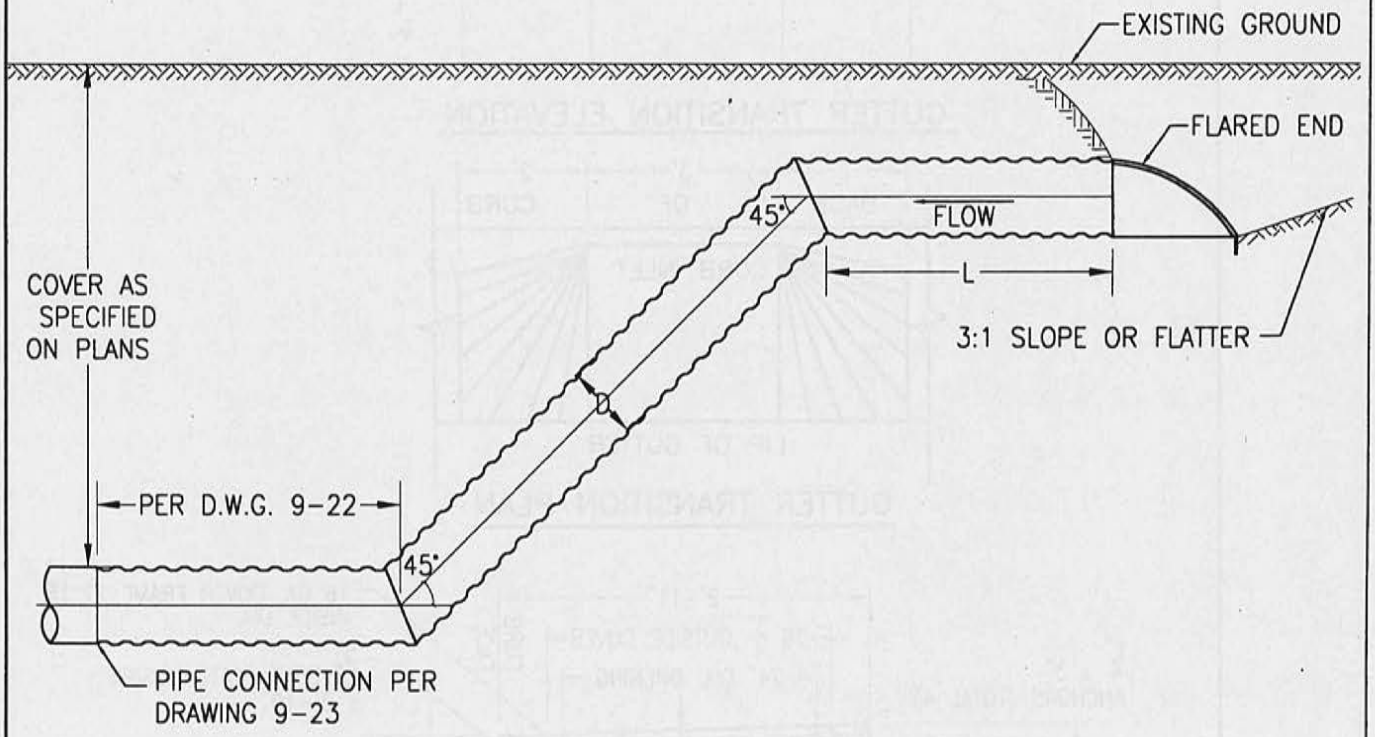

RISER DIAMETER,D	LENGTH OF HORIZONTAL PIPE, L
12"	1'-0"
15"	1'-0"
18"	1'-6"
21"	1'-6"
24"	1'-6"
30"	2-0"
36"	3'-0"
42"	4'-0"
48"	4'-0"

NOTES

1. USE 2-PIECE ELBOW AT BOTH ENDS OF RISER. ELBOWS SHALL CONFORM TO DRAWING 9-22.
2. TO BE USED ONLY WITH THE SPECIFIC APPROVAL OF THE DIRECTOR.
3. PIPE MATERIAL MAY BE EITHER CMP OR HDPE.

Robert S. Shank
DIRECTOR

SACRAMENTO COUNTY
PUBLIC WORKS AGENCY

DRAINAGE INLET TYPE H

DRAWN BY: MYRA FIELDS
SCALE: NONE
DATE: 11/98

9-20

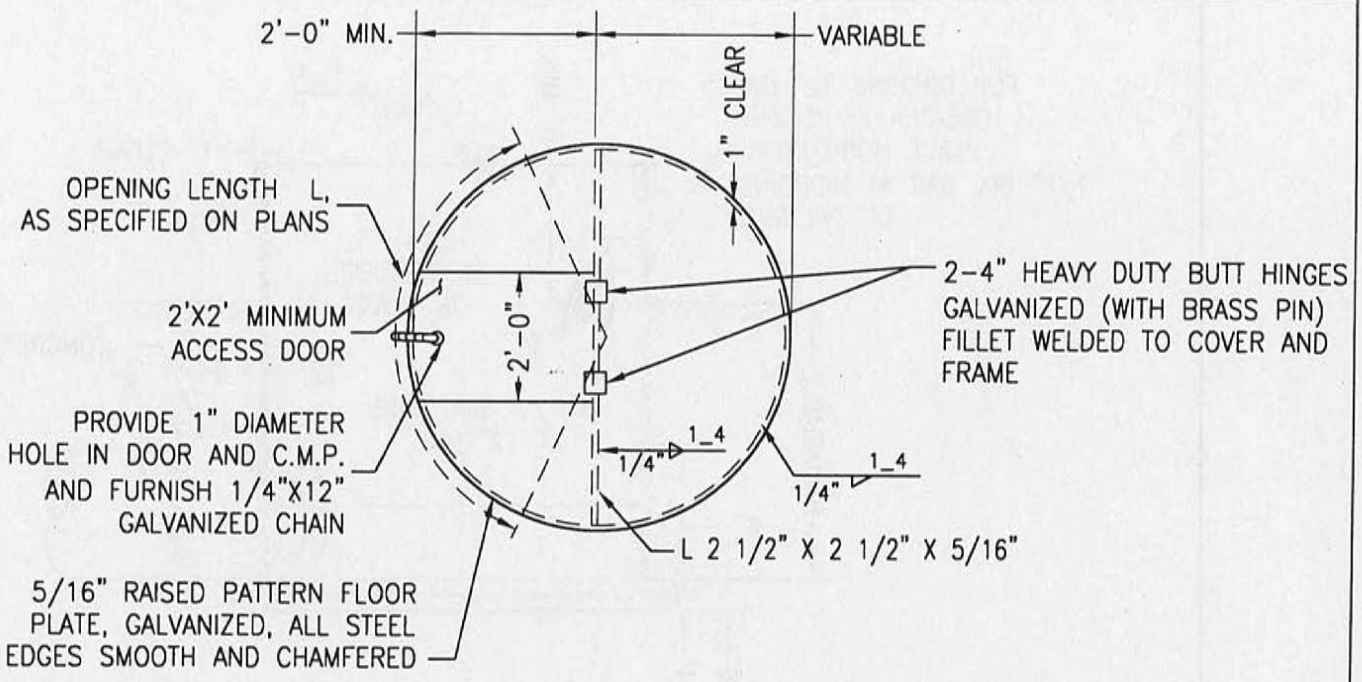

PLAN

42" DIAMETER TO 72" DIAMETER
C.M.P. INLET

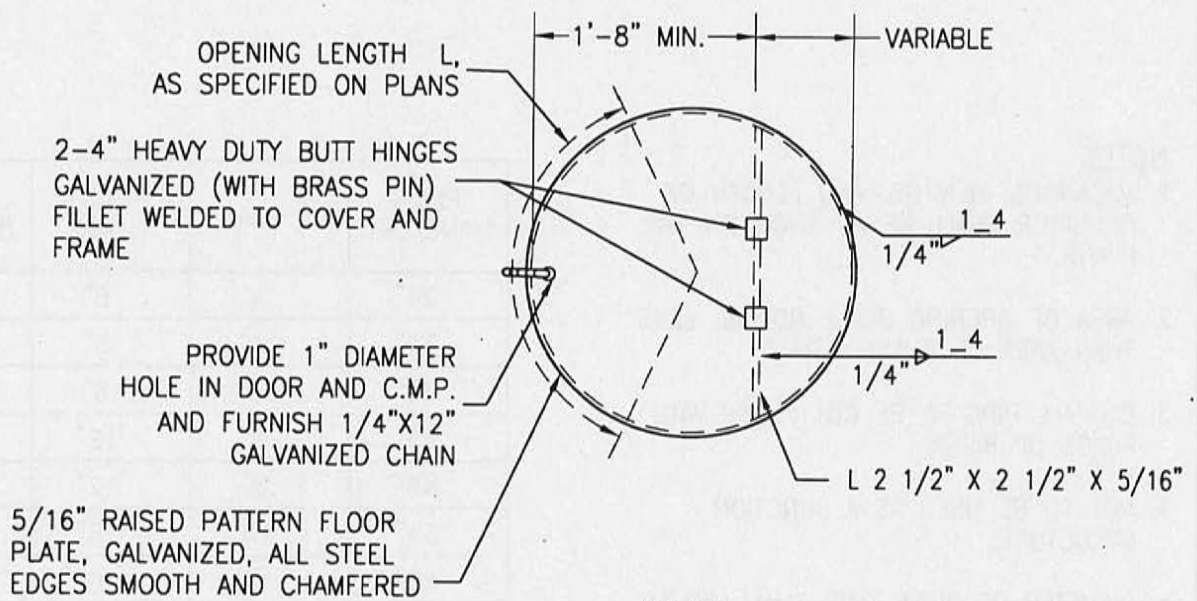

PLAN

24" DIAMETER TO 36" DIAMETER
C.M.P. INLET

Robert S. Shanks
DIRECTOR

SACRAMENTO COUNTY
PUBLIC WORKS AGENCY

CORRUGATED METAL PIPE DRAINAGE INLET TYPE I

DRAWN BY: MYRA FIELDS
SCALE: NONE
DATE: 11/98

9-21
SHEET 1 OF 2

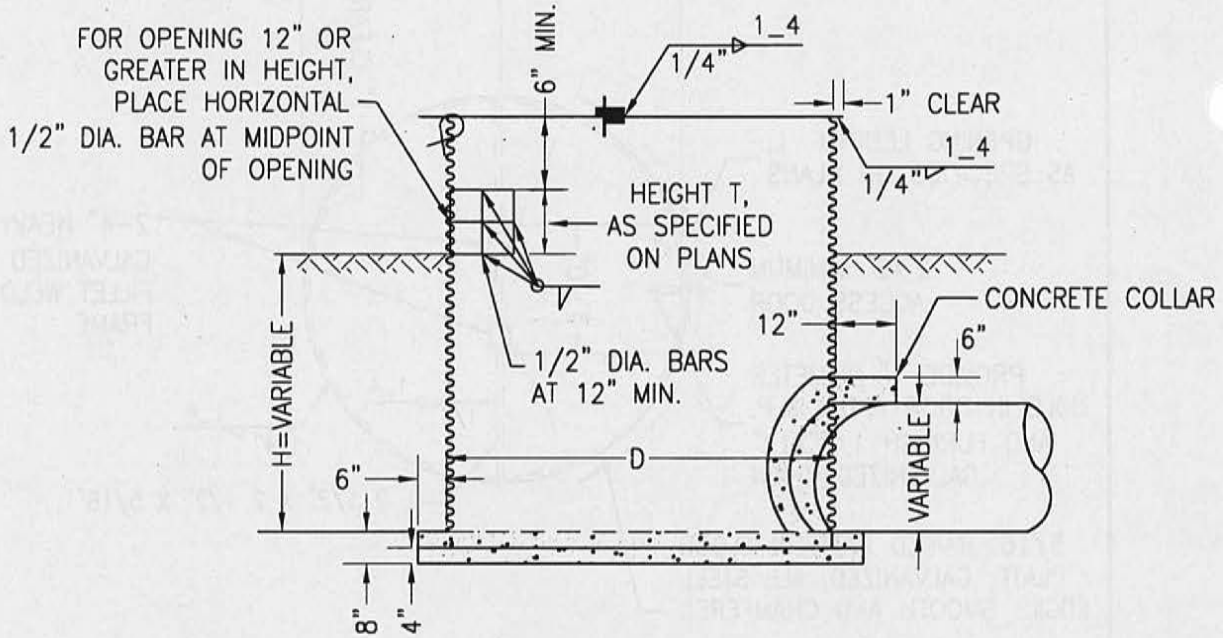

SECTION
24" DIAMETER TO 36" DIAMETER C.M.P. INLET

NOTES

1. LOCATIONS, HEIGHTS, AND LENGTH OF OPENINGS SHALL BE AS SHOW ON THE PLANS.
2. AREA OF OPENING SHALL NOT BE LESS THAN AREA OF OUTFALL PIPE.
3. OUTFALL PIPE TO BE CUT FLUSH WITH INSIDE OF RISER.
4. NOT TO BE USED AS A JUNCTION STRUCTURE.
5. DIAMETER OF RISER PIPE SHALL BE AT LEAST ONE SIZE LARGER THAN OUTFALL PIPE.
6. TO BE USED ONLY WITH THE SPECIFIC APPROVAL OF THE DIRECTOR.

RISER DIAMETER,D	H, MAX.	HEIGHT T, MAX.	GAGES (MINIMUM)
24"	4'	8"	0.079"
30"	4'	8"	0.079"
36"	5'	8"	0.109"
42"	8'	12"	0.109"
48"	8'	12"	0.109"
54"	10'	18"	0.109"
60"	10'	18"	0.109"
72"	10'	18"	0.109"

Robert S. Shenk
DIRECTOR

SACRAMENTO COUNTY
PUBLIC WORKS AGENCY

CORRUGATED METAL PIPE DRAINAGE INLET TYPE I

DRAWN BY: MYRA FIELDS
SCALE: NONE
DATE: 11/98

9-21
SHEET 2 OF 2

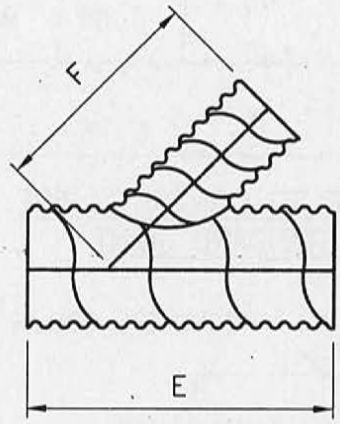

WYE LATERAL

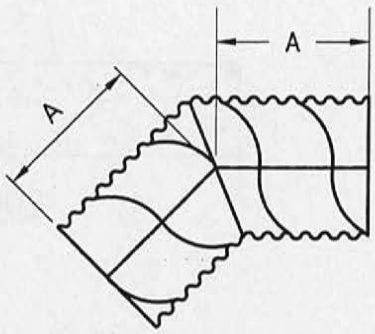

ELBOW
0° to 45°

FITTING SIZES

DIA (in)	A (ft)	E (ft)	F (ft)
12	1	4	2
15	1	4	4
18	1	4	4
21	2	6	4
24	2	6	4
30	2	6	4
36	2	8	6
42	2	8	6
48	2	10	8
54	3	10	8
60	3	12	10
66	3	12	10
72	3	14	10
78	3	14	10
84	3	16	12
90	3	16	12
96	3	16	12

NOTES

1. To use table, refer to diagram and select letter representing desired dimension, then enter table at correct pipe dimension and read dimension in column under appropriate letter heading.

2. Dimensions on table allow for use of standard 12 inch wide band coupler on sizes 12 inch through 54 inch and 24 inch wide band on 60 inch and larger sizes.

3. For pipe-arch fittings, choose pipe diameter equal to or greater than arch span. (Example: 35 inch x 24 inch pipe-arch; use dimensions for 36 inch pipe).

4. Structural reinforcement may be required on some larger sizes.

Robert J. Shenk
DIRECTOR

SACRAMENTO COUNTY
PUBLIC WORKS AGENCY

CORRUGATED PIPE FITTINGS

DRAWN BY: C. SCHUMAKER
SCALE: NONE
DATE: 11/98

9-22

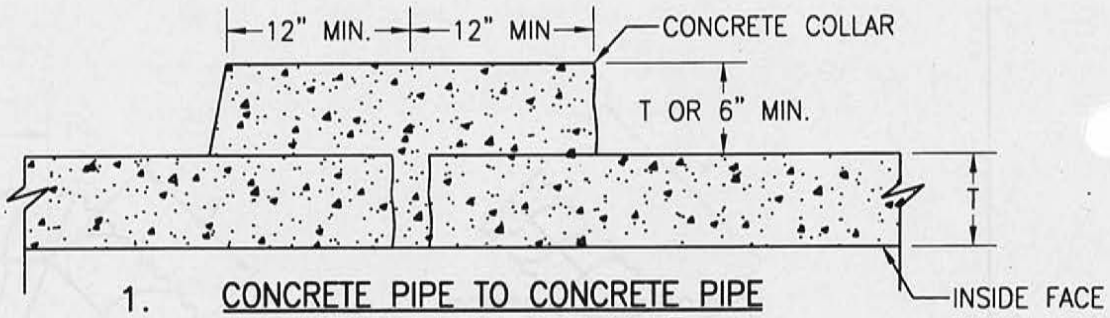

1. CONCRETE PIPE TO CONCRETE PIPE WITHOUT STANDARD JOINT

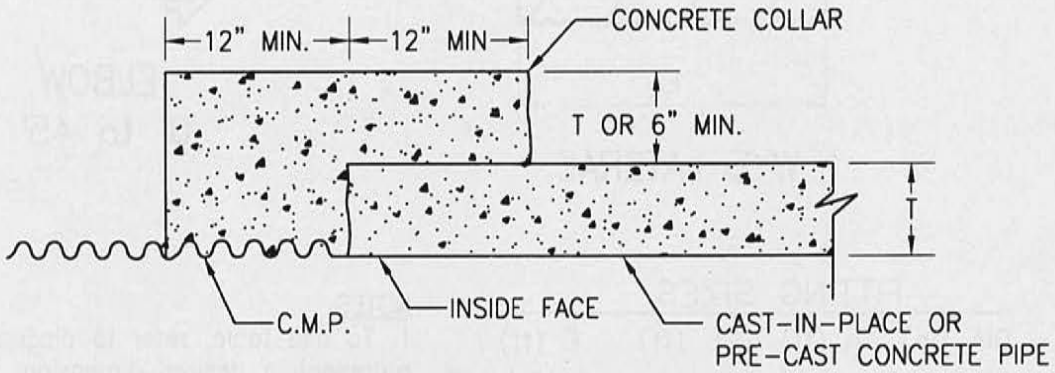

2. CAST-IN-PLACE OR PRE-CAST CONCRETE PIPE TO CSP

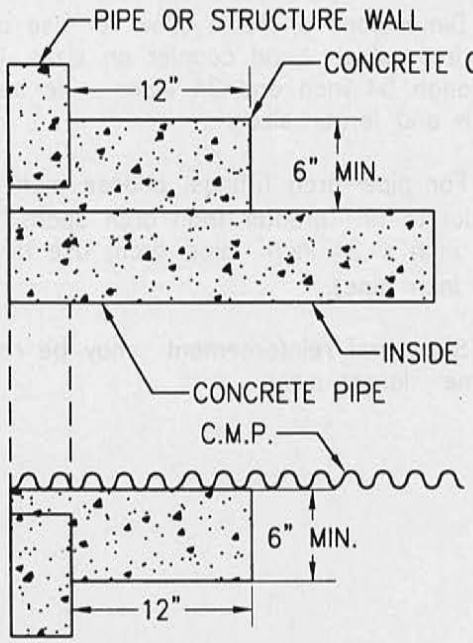

3. CONCRETE PIPE, C.M.P. INTO EXISTING PIPE OR STRUCTURE

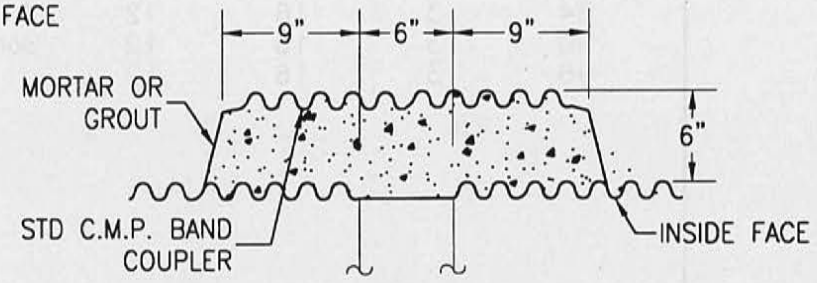

4. PIPES OF DISSIMILAR METALS

NOTE: TO CONNECT HDPE TYPE S OR D PIPE TO OTHER PIPES USE COLLAR SHOWN IN DETAIL 1 OR USE MANUFACTURERS STANDARD HDPE REPAIR COUPLING.

Robert J. Leonard
DIRECTOR

SACRAMENTO COUNTY
PUBLIC WORKS AGENCY

PIPE CONNECTIONS

DRAWN BY: MYRA FIELDS
SCALE: NONE
DATE: 11/98

9-23

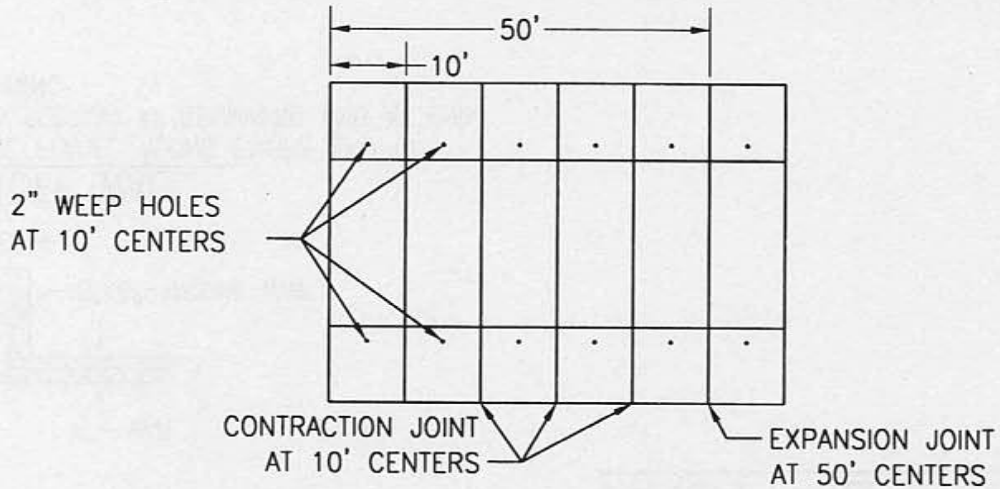

PLAN VIEW

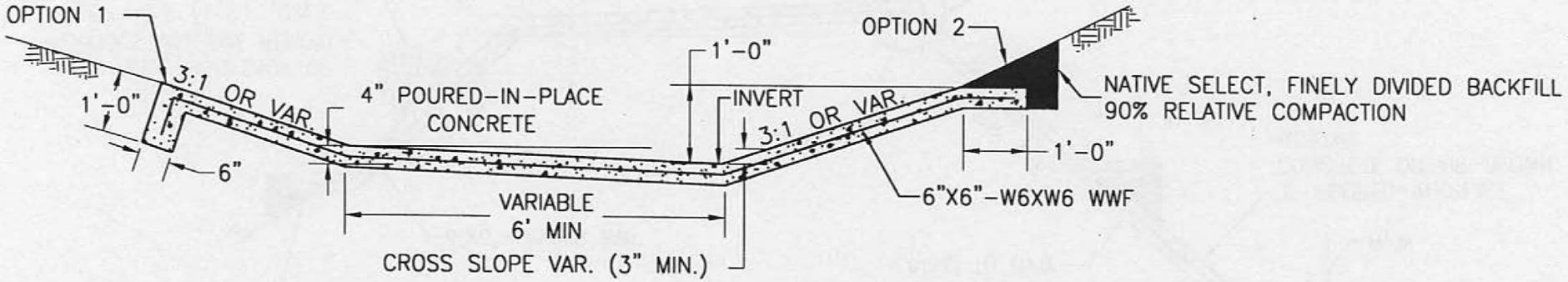

TYPICAL BOTTOM LINING

DIRECTOR

SACRAMENTO COUNTY
PUBLIC WORKS AGENCY

LINED CHANNEL SECTION

DRAWN BY: MYRA FIELDS
SCALE: NONE
DATE: 7/98

9-24
SHEET 1 OF 2

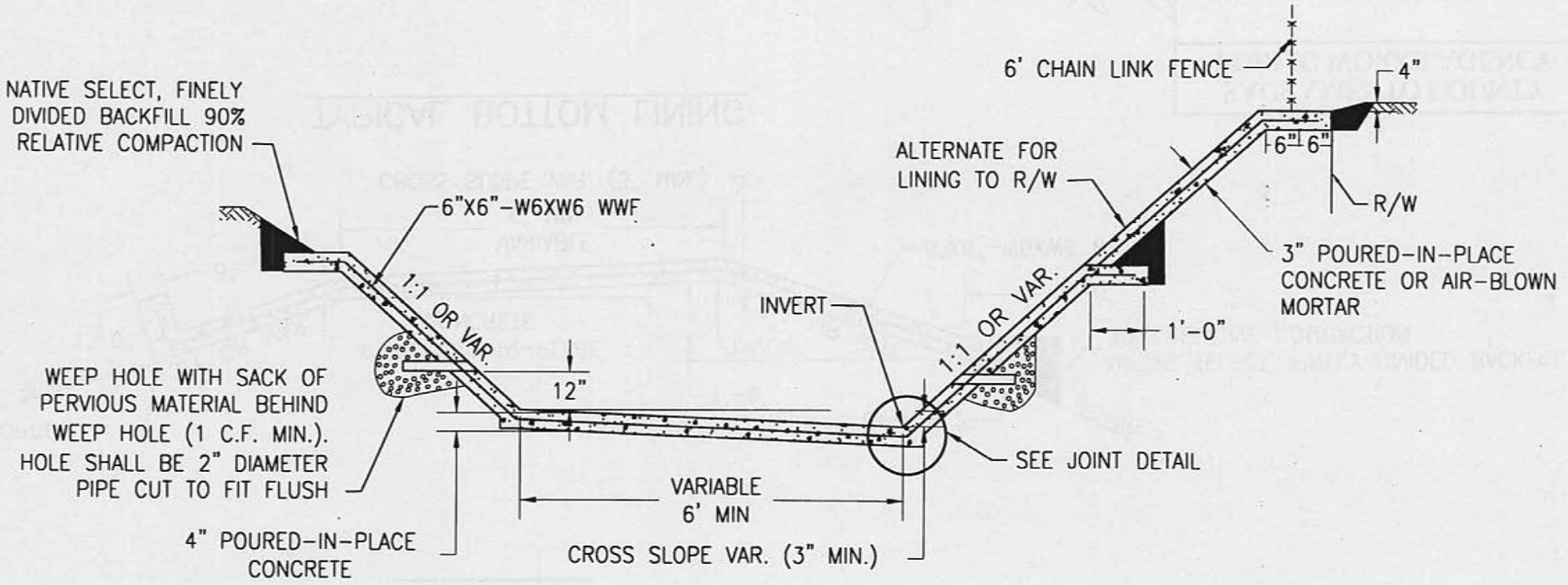

TYPICAL FULL LINING

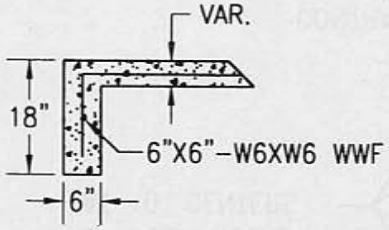

CUTOFF WALL

TO BE PLACED ALONG ENTIRE END OF LINED SECTION AT BEGINNING AND AT END OF LINING

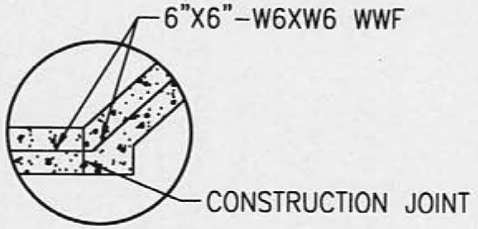

JOINT DETAIL

SACRAMENTO COUNTY
PUBLIC WORKS AGENCY

LINED CHANNEL SECTION

Robert A. Ghirardelli
DIRECTOR

DRAWN BY: MYRA FIELDS
SCALE: NONE
DATE: 7/98

9-24
SHEET 2 OF 2

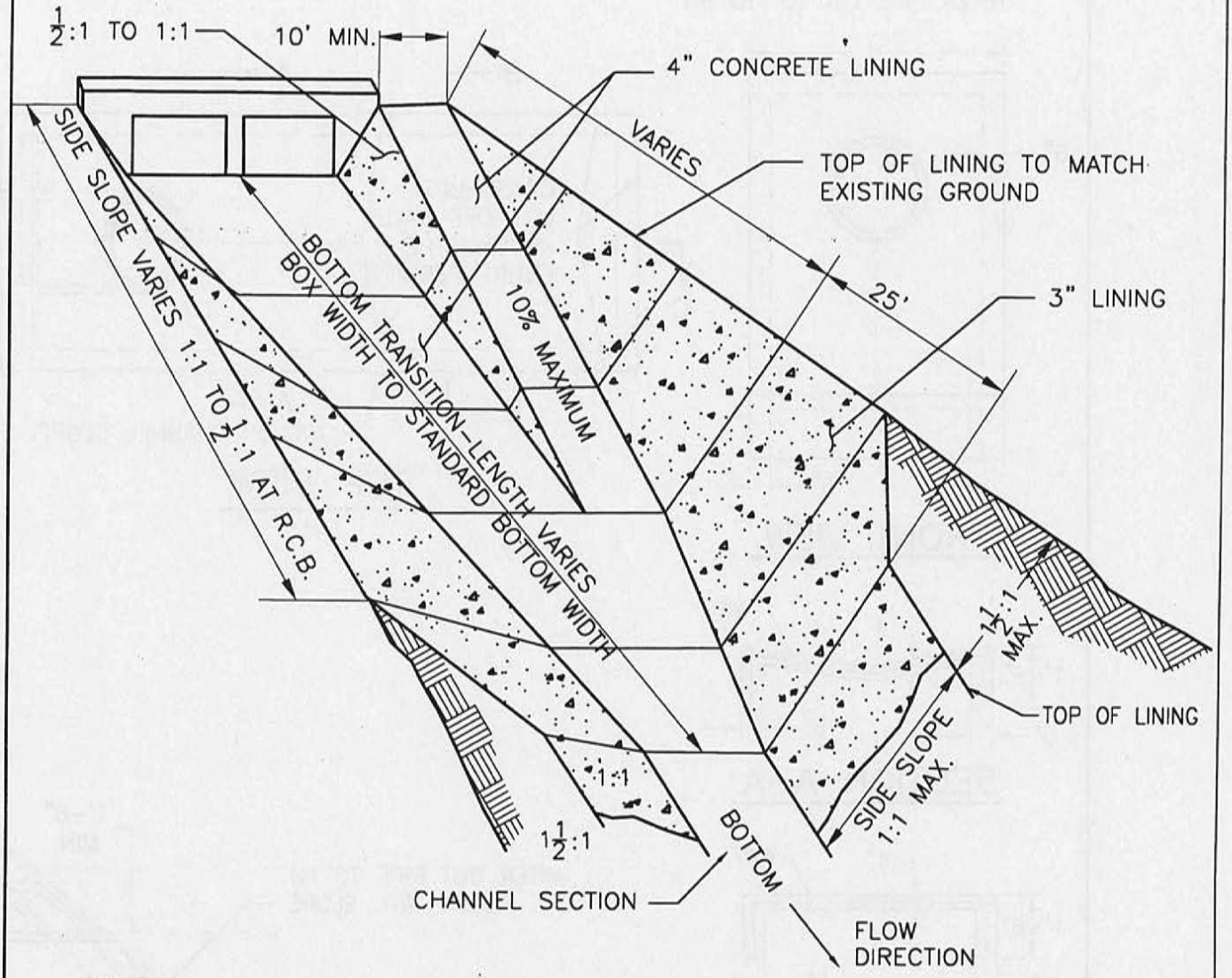

NOTES:

1. BOTTOM TRANSITION 25' MINIMUM LENGTH WITH NO RAMP.
2. WEEP HOLES AND JOINTS AS REQUIRED FOR ALL LINED CHANNEL SECTIONS.
3. LOW SIDE OF CHANNEL TO BE OPPOSITE RAMP.
4. SIDE SLOPE LINING MAY BE DELETED ON CHANNELS WITH BOTTOM LINING ONLY.

Robert J. Shanks

DIRECTOR

SACRAMENTO COUNTY
PUBLIC WORKS AGENCY

TYPICAL RAMP & TRANSITION DETAIL

DRAWN BY: TRU PHAN
SCALE: NONE
DATE: 11/98

9-25

H=6'-0" MINIMUM
H=2X PIPE DIA. (3' TO 6')

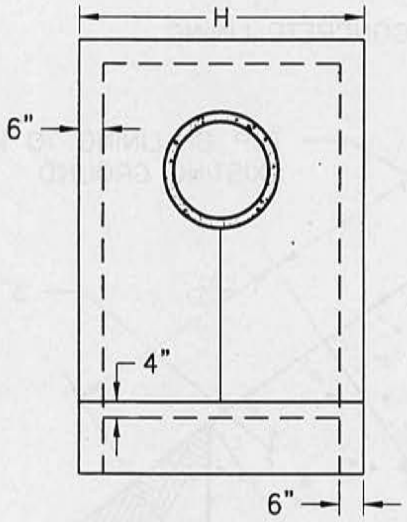

FRONT VIEW

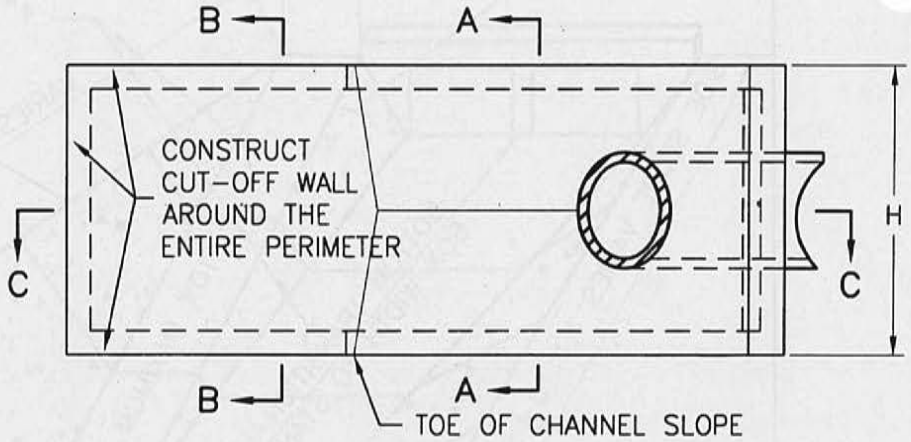

TOP VIEW

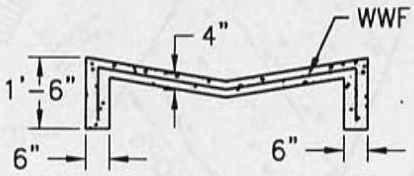

SECTION A-A

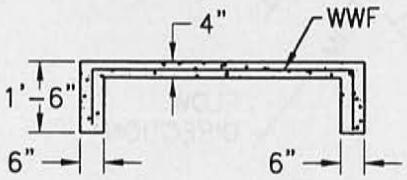

SECTION B-B

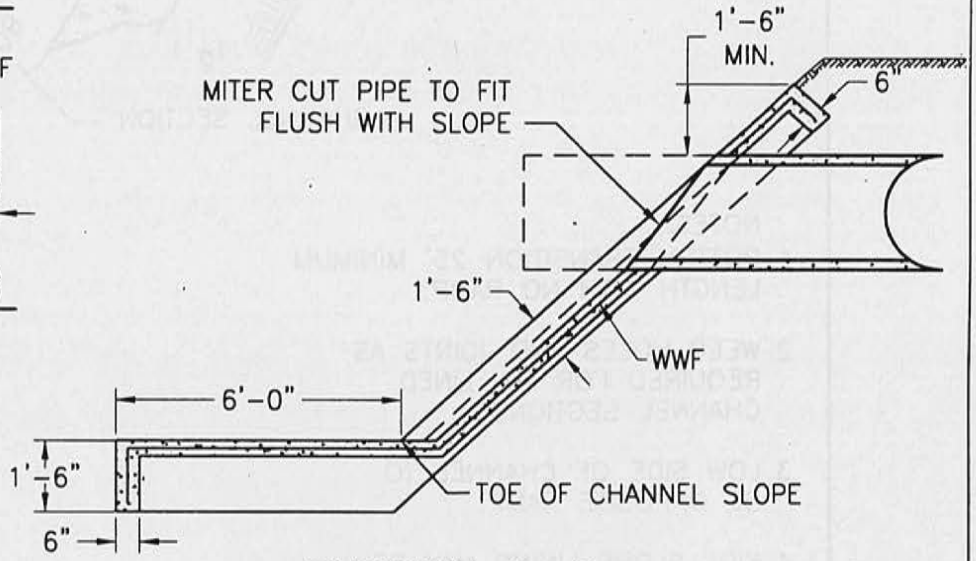

SECTION C-C

NOTES

1. USE CLASS "B" CONCRETE OR GROUTED COBBLES AS SPECIFIED.
2. 6"X6"-W6XW6 WWF THROUGHOUT CONCRETE

Robert J. Shanks
DIRECTOR

SACRAMENTO COUNTY
PUBLIC WORKS AGENCY

EROSION CONTROL PIPE DISCHARGE

DRAWN BY: MYRA FIELDS
SCALE: NONE
DATE: 11/98

9-26

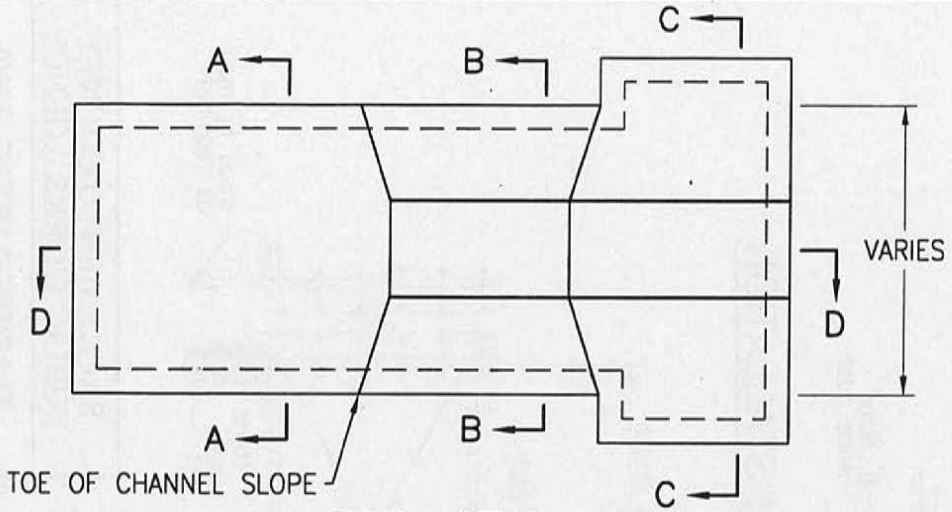

TOP VIEW

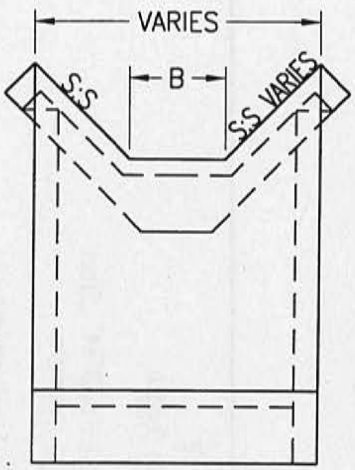

FRONT VIEW

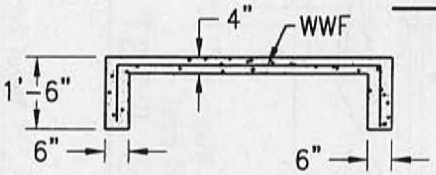

SECTION A–A

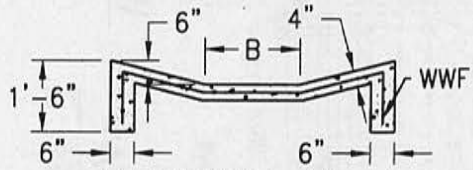

SECTION B–B

NOTES

1. USE CLASS "B" CONCRETE OR GROUTED COBBLES AS SPECIFIED.
2. 6"X6"–W6XW6 WWF THROUGHOUT CONCRETE
3. ON LINED CHANNELS APRON SHALL CONNECT TO SIDE LINING.
4. B=DITCH BOTTOM WIDTH OR AS SHOWN ON PLANS.
5. D=DITCH WATER DEPTH PLUS ONE FOOT OF FREEBOARD.

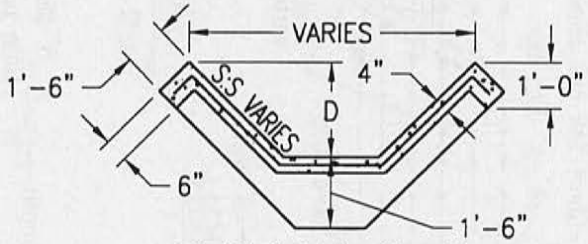

SECTION C–C

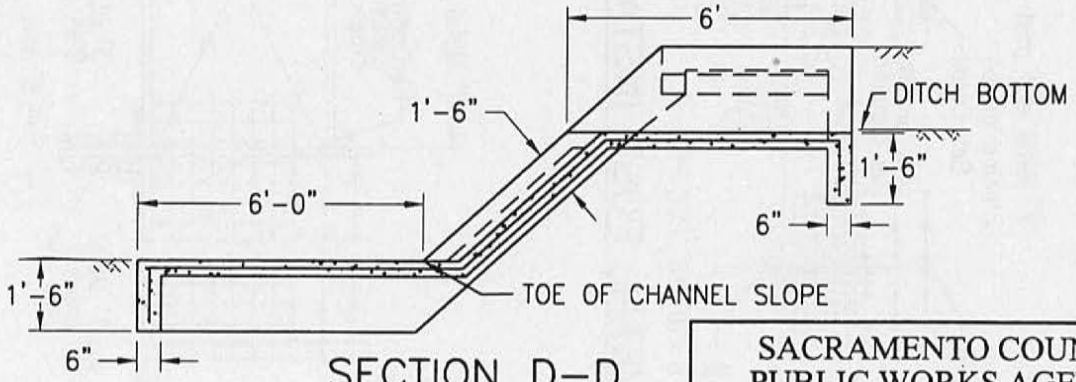

SECTION D–D

Robert J. Shanks
DIRECTOR

SACRAMENTO COUNTY
PUBLIC WORKS AGENCY

EROSION CONTROL
DITCH DISCHARGE

DRAWN BY: MYRA FIELDS
SCALE: NONE
DATE: 11/98

9-27

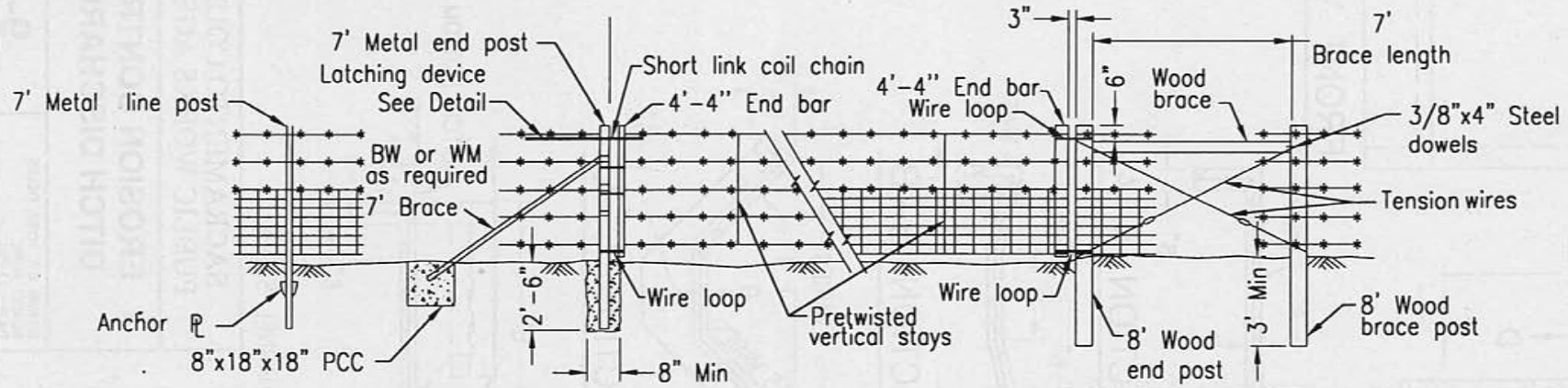

METAL POST INSTALLATION

WOOD POST INSTALLATION

GATEWAY
See Note 3

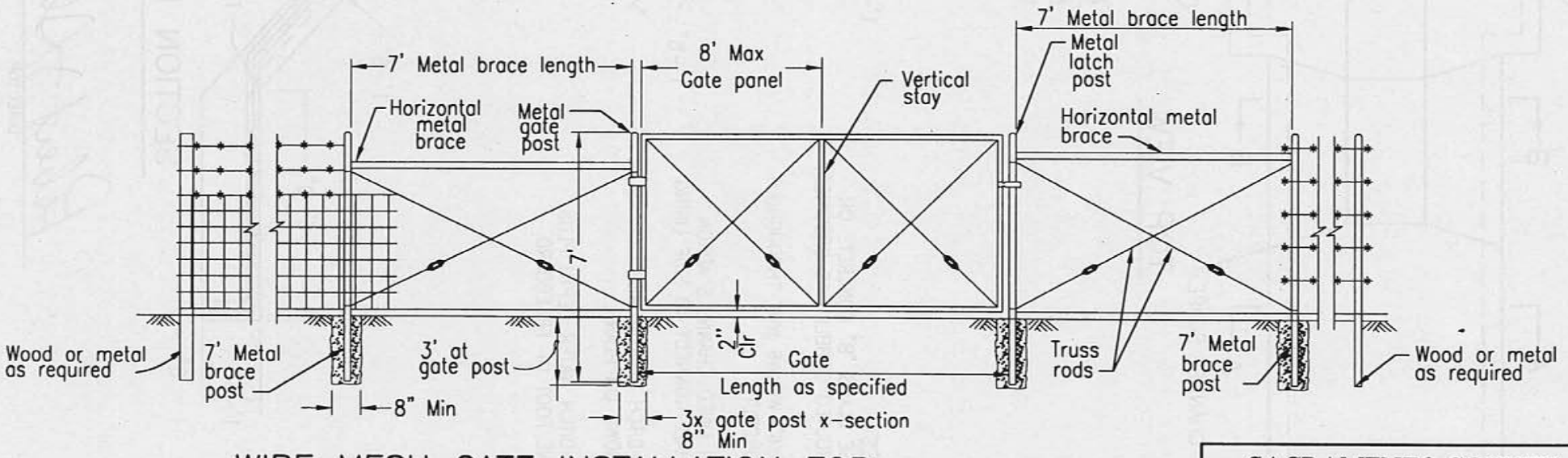

WIRE MESH GATE INSTALLATION FOR EITHER WOOD OR METAL POST FENCES

DIRECTOR

SACRAMENTO COUNTY
PUBLIC WORKS AGENCY

BARBED WIRE AND WIRE MESH FENCES

DRAWN BY: CT-AB6
SCALE: NONE
DATE: 11/98

9-28
SHEET 1 OF 3

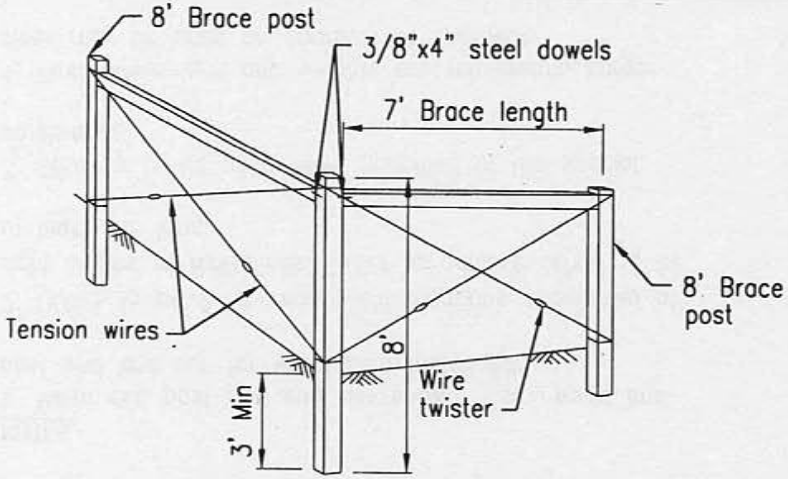

END AND CORNER POST ASSEMBLY

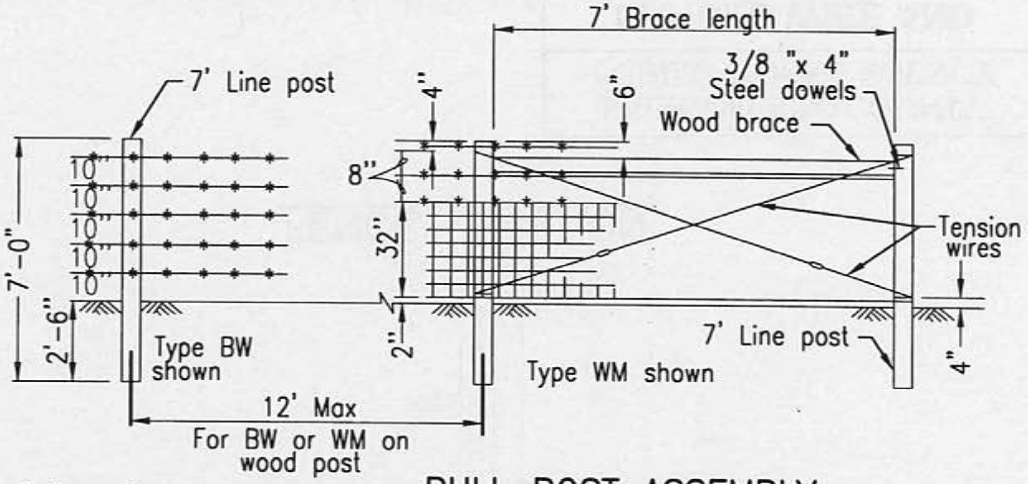

Type BW = 5 lines of barbed wire.
Type WM = Wire mesh and 3 lines of barbed wire.

PULL POST ASSEMBLY

At 660' maximum intervals for WM fence.
At 1320' maximum intervals for BW fence.

WOOD POST INSTALLATION

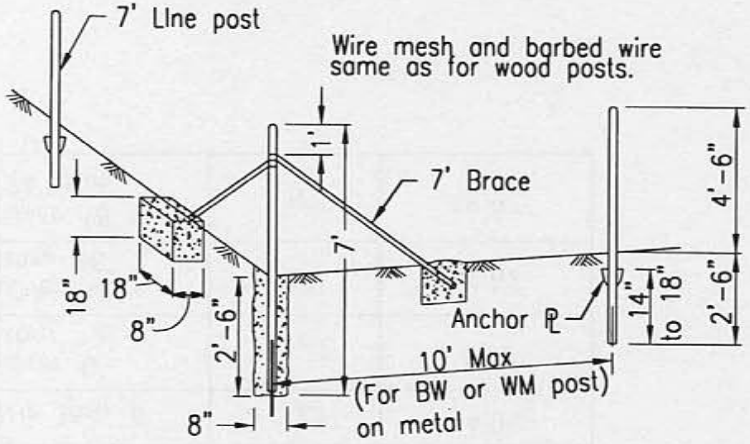

END AND CORNER POST ASSEMBLY

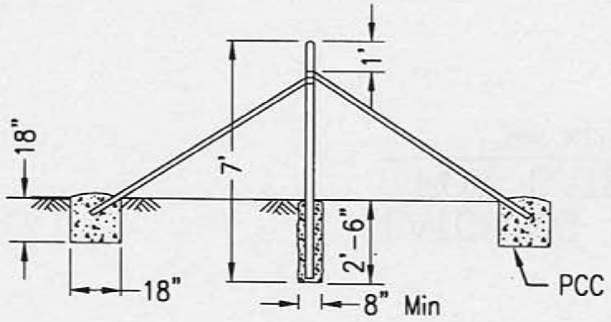

PULL POST ASSEMBLY

At 660' maximum intervals for WM fence.
At 1320' maximum intervals for BW fence.

METAL POST INSTALLATION

Robert J. Shaw
DIRECTOR

SACRAMENTO COUNTY
PUBLIC WORKS AGENCY

BARBED WIRE AND WIRE MESH FENCES

DRAWN BY: CTA86
SCALE: NONE
DATE: 11/98

9-28
SHEET 2 OF 3

WIRE MESH GATE POST (See Note 4)		
GATE WIDTHS	NOMINAL ID	WEIGHT PER FT
Up thru 6'	2 1/2"	4.95
Over 6' thru 12'	3 1/2"	9.11
Over 12' thru 18'	5"	14.62
Over 18' to 24' Max	6"	18.97

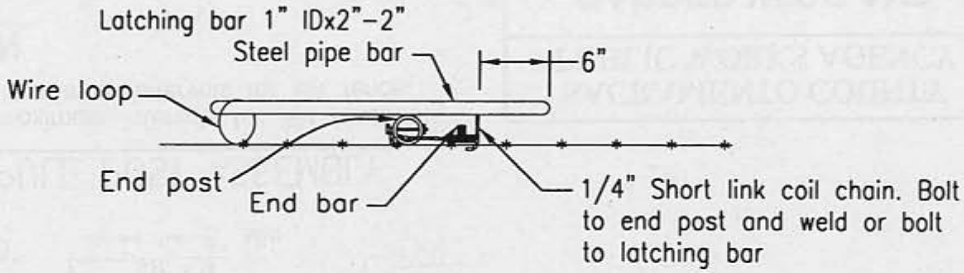

LATCHING DEVICE FOR GATEWAYS

See Note 1

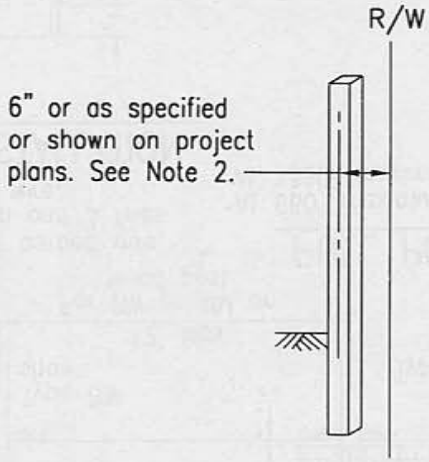

FENCE LOCATION

NOTES

1. Metal end post and end bar shown. Use wood end post and end bar for wood post installation.

2. Offset to be 2' at monument locations, measured at right angles to R/W lines. Taper to achieve offset to be at least 20' long.

3. Gateway to be used when specified in the special provisions.

4. Post dimensions and weights are minimums. Larger sizes may be used on approval of Engineer.

5. Line post spacing for wood post equals 12' maximum. Line post spacing for metal post equals 10' maximum

DIRECTOR

SACRAMENTO COUNTY PUBLIC WORKS AGENCY

BARBED WIRE AND WIRE MESH FENCES

DRAWN BY: CT-A86
SCALE: NONE
DATE: 11/98

9-28
SHEET 3 OF 3

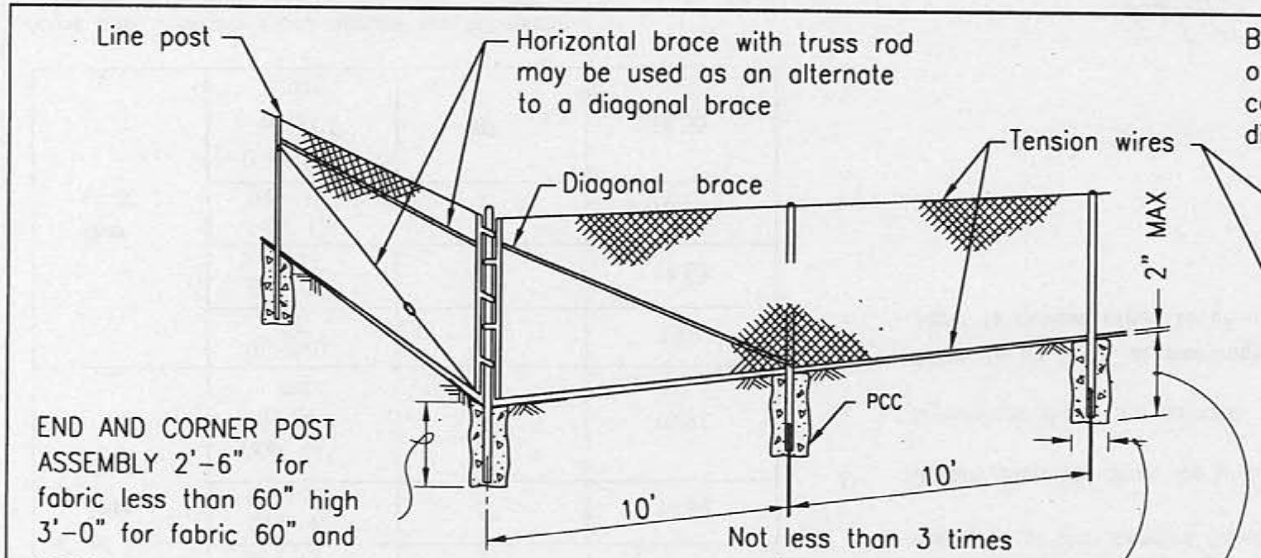

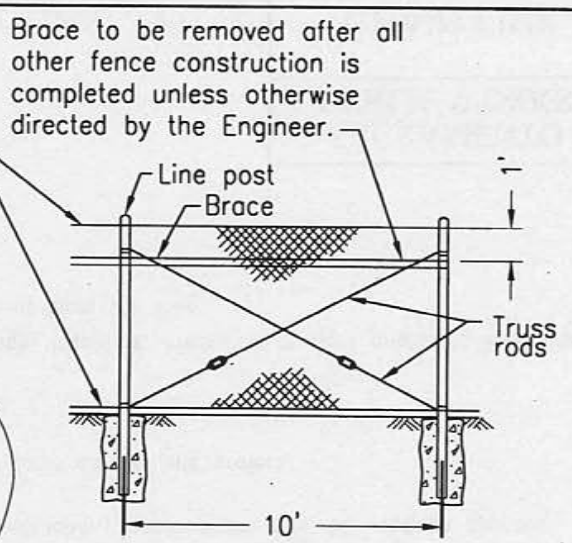

Line posts at 1000' maximum intervals braced and trussed in both directions except that this bracing and trussing may be omitted when the fabric is stretched by the equipment

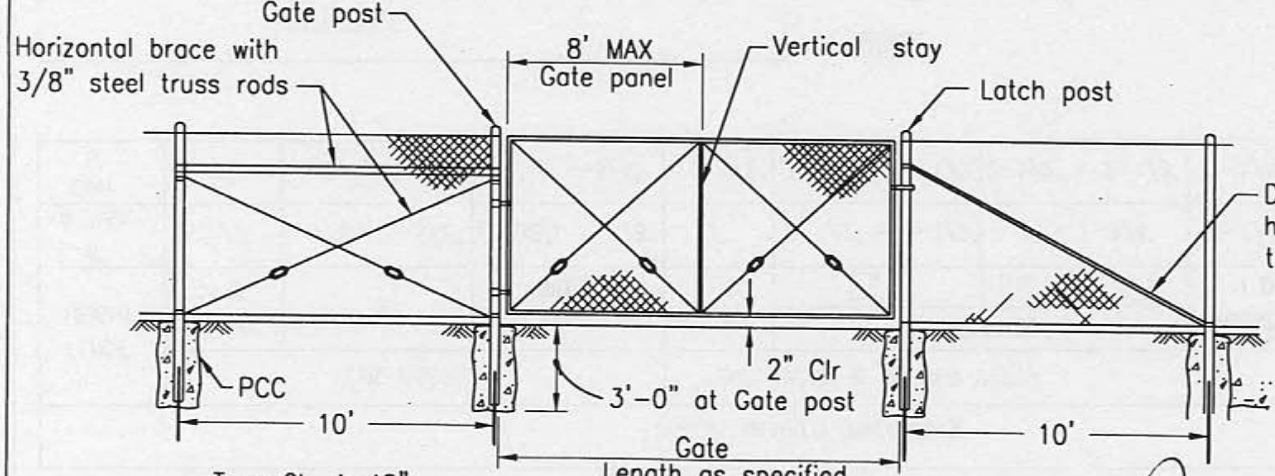

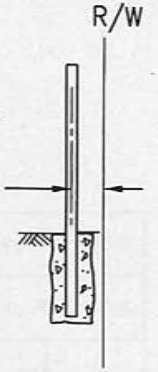

Robert H. Shank
DIRECTOR

SACRAMENTO COUNTY
PUBLIC WORKS AGENCY

CHAIN LINK FENCE

DRAWN BY: CT-A85
SCALE: NONE
DATE: 11/98

9-29
SHEET 1 OF 2

TYPICAL MEMBER DIMENSIONS (See Notes)										
FENCE HEIGHT	LINE POSTS			END, LATCH & CORNER POSTS			BRACES			
	ROUND I D	H	ROLL FORMED	ROUND I D	ROLL FORMED		ROUND I D	H	ROLL FORMED	
					⊔	⊓ ⊓			⊓	⊓
6' & less	1-1/2"	1-7/8"x 1-5/8"	1-7/8"x 1-5/8"	2"	3-1/2" x 3-1/2"	2" x 1-3/4"	1-1/4"	1-1/2" x 1-5/16"	1-5/8" x 1-1/4"	1-3/4" x 1-1/4"
Over 6'	2"	2-1/4" x 2"	2" x 1-3/4"	2-1/2"	3-1/2" x 3-1/2"	2-1/2" x 2-1/2"	1-1/4"	1-1/2" x 1-5/16"	1-5/8" x 1-1/4"	1-3/4" x 1-1/4"

GATE POST			
FENCE HEIGHT	GATE WIDTHS (m)	NOMINAL I D (mm)	MASS PER METER (kg)
6'-0" and Less	Up thru 6'	2-1/2"	4.95
	Over 6' thru 12'	4"	10.79
	Over 12' thru 18'	5"	14.62
	Over 18' to 24' max	12"	18.97
Over 6'-0"	Up thru 6'	3"	7.58
	Over 6' thru 12'	5"	14.62
	Over 12' thru 18'	12"	18.97
	Over 18' to 24' max	8"	28.55

Above post dimensions and masses are minimums. Larger sizes may be used on approval of the Engineer.

NOTES

1. The above table shows examples of post and brace sections which may comply with the Standard Construction Specifications.
2. Sections shown in the tables must also comply with the strength requirements and other provisions of the Standard Construction Specifications.
3. Other sections which comply with the strength requirements and other provisions of the Standard Construction Specifications may be used on approval of the Engineer.
4. Options exercised shall be uniform on any one project.
5. Dimensions shown are nominal.
6. Offset to be 2'-0" at monument locations, measured at right angles to R/W lines. Taper to achieve offset to be at least 20' long.

DIRECTOR

SACRAMENTO COUNTY PUBLIC WORKS AGENCY

CHAIN LINK FENCE

DRAWN BY: CT-A85
SCALE: NONE
DATE: 11/98

9-29

EET 2 OF 2

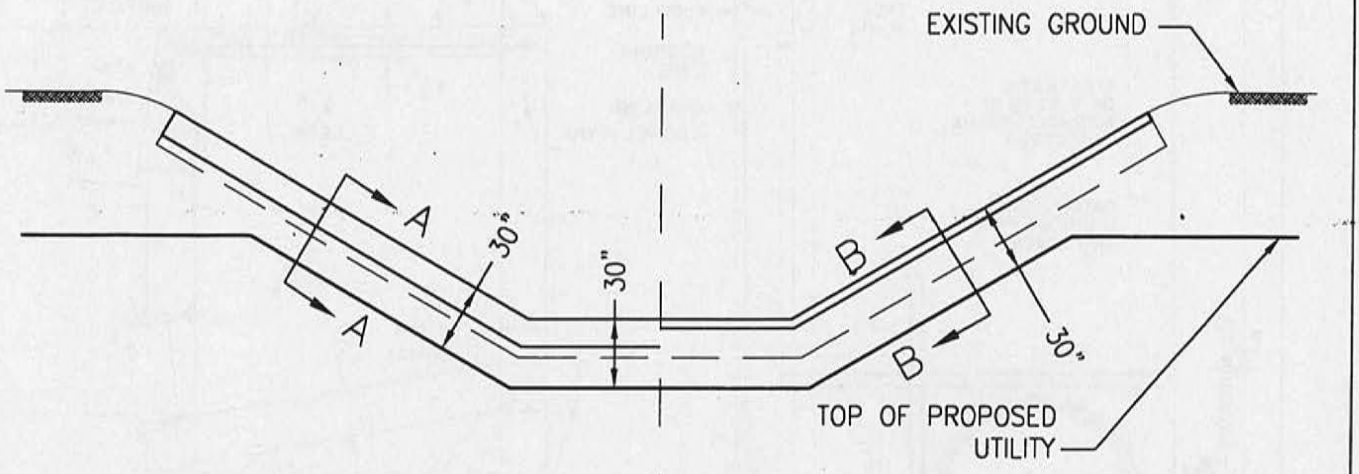

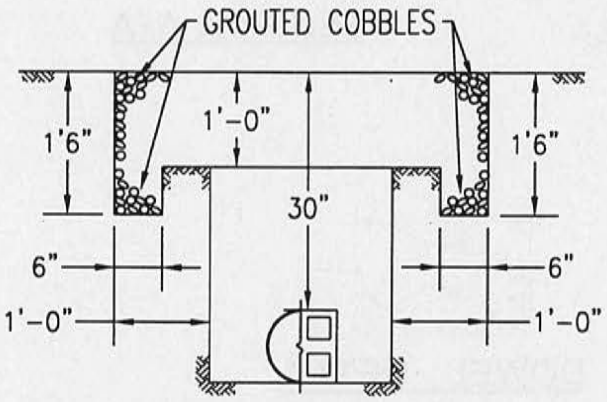

SECTION A–A

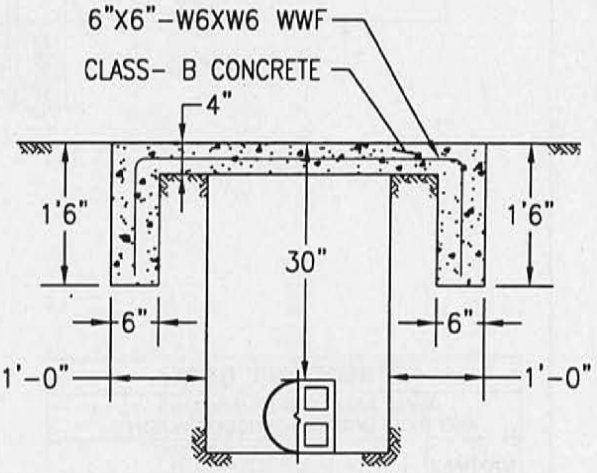

SECTION B–B

NOTES

1. ALL UTILITY CROSSINGS OF EXISTING STREAMS SHALL BE AT LEAST 30" BELOW EXISTING CHANNEL SIDES AND BOTTOMS. DEEPER PLACEMENT MAY BE REQUIRED IF FUTURE CHANNEL IMPROVEMENTS ARE ANTICIPATED.

2. THE CUT SHALL BE SEALED AS SHOWN WITH GROUTED COBBLES OR CLASS B CONCRETE TO A WIDTH 1' EACH SIDE OF THE UTILITY TRENCH. ALL NATURAL STREAMS, AS SHOWN ON THE NATURAL STREAMS PLAN, SHALL UTILIZE GROUTED COBBLES.

3. CONSTRUCTION IS TO CONFORM TO SECTION SS–37 AND SS–81A OF THE COUNTY CONSTRUCTION SPECIFICATIONS WITH CUT OFF WALLS CONFORMING TO STANDARD DRAWING 9–24.

Robert J. Shaw

DIRECTOR

SACRAMENTO COUNTY
PUBLIC WORKS AGENCY

UTILITY STREAM CROSSING

DRAWN BY: MYRA FIELDS
SCALE: NONE
DATE: 11/98

9-30

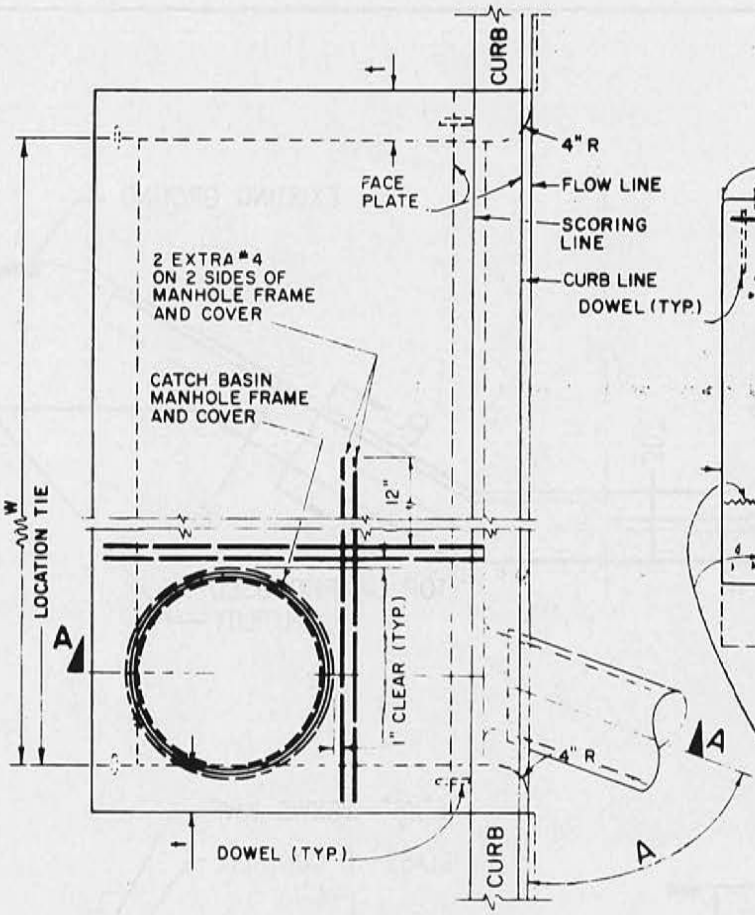

PLAN

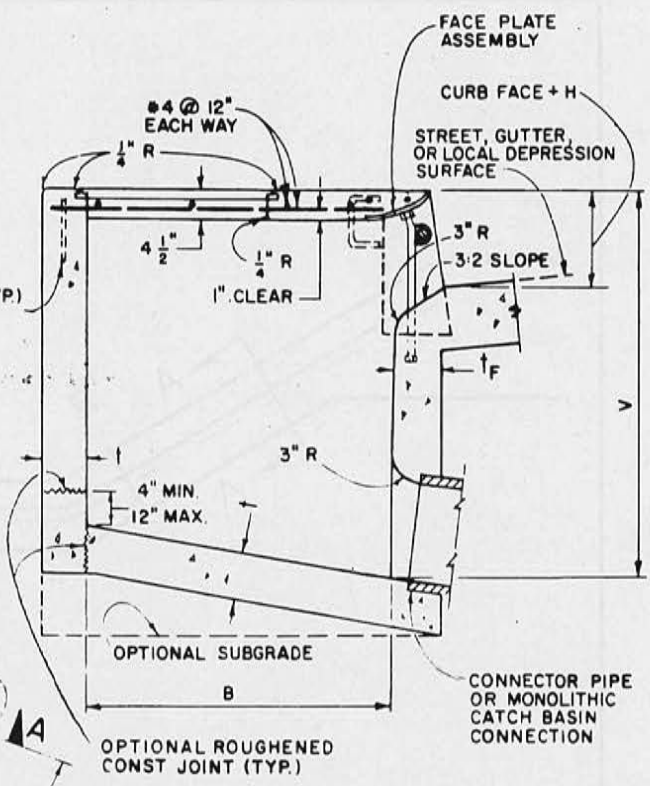

SECTION A-A

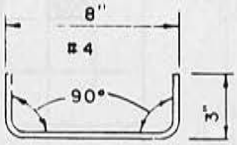

DOWEL DETAIL

STRUCTURAL DATA

WALL AND SLAB DIMENSIONS AND REINFORCEMENT REQUIREMENTS

MAX W	MAX V	t	tF	REINFORCEMENT REQUIRED IN FRONT WALL	REAR WALL	BOTTOM SLAB	END WALL
3.5'	8'	6"	6"	NO REINFORCEMENT REQUIRED			
3.5'	12'	8"	8"				
7'	6'	6"	6"				
7'	12'	8"	8"				
14'	4'	6"	6"				
	8'	6"	8"				
14'	12'	8"	10"				
21' AND 28'	4'	6"	6"				
	6'	6"	8"				
	8'	8"	8"				
	10'	8"	10"				
	12'	8"	10"				

FOR W > 28', V > 12' OR B > 4' SEE PROJECT PLANS

AMERICAN PUBLIC WORKS ASSOCIATION – SOUTHERN CALIFORNIA CHAPTER

PROMULGATED BY THE APWA-AGC JOINT COOPERATIVE COMMITTEE
1984
REV. 1992

CURB OPENING CATCH BASIN

STANDARD PLAN
300-1
SHEET 1 OF 2

NOTES:

1. WHERE THE BASIN IS TO BE CONSTRUCTED WITHIN THE LIMITS OF EXISTING OR PROPOSED SIDEWALK OR IS CONTIGUOUS TO SUCH SIDEWALK, THE TOP SLAB OF THE BASIN MAY BE POURED EITHER MONOLITHIC WITH THE SIDEWALK OR SEPARATELY, USING THE SAME CLASS OF CONCRETE AS IN THE BASIN. WHEN POURED MONOLITHICALLY, THE SIDEWALK SHALL BE PROVIDED WITH A WEAKENED PLANE OR A 1-INCH DEEP SAWCUT CONTINUOUSLY AROUND THE EXTERNAL PERIMETER OF THE CATCH BASIN WALLS, INCLUDING ACROSS THE FULL WIDTH OF THE SIDEWALK. SURFACE OF ALL EXPOSED CONCRETE SHALL CONFORM IN SLOPE, GRADE, COLOR, FINISH, AND SCORING TO EXISTING OR PROPOSED CURB AND WALK ADJACENT TO THE BASIN.
2. ALL CURVED CONCRETE SURFACES SHALL BE FORMED BY CURVED FORMS, AND SHALL NOT BE SHAPED BY PLASTERING.
3. FLOOR OF BASIN SHALL BE GIVEN A STEEL TROWEL FINISH AND SHALL HAVE A LONGITUDINAL AND LATERAL SLOPE OF 1:12 MINIMUM AND 1:3 MAXIMUM, EXCEPT WHERE THE GUTTER GRADE EXCEEDS 8 PERCENT, IN WHICH CASE THE LONGITUDINAL SLOPE OF THE FLOOR SHALL BE THE SAME AS THE GUTTER GRADE. SLOPE FLOOR FROM ALL DIRECTIONS TO THE OUTLET.
4. DIMENSIONS:
   - B = 3 FEET 2 INCHES
   - V = THE DIFFERENCE IN ELEVATION BETWEEN THE TOP OF THE CURB AND THE INVERT OF THE CATCH BASIN AT THE OUTLET. NOTED ON THE PROJECT PLANS.
   - V_U = THE DIFFERENCE IN ELEVATION BETWEEN THE TOP OF THE CURB AND THE INVERT AT THE UPSTREAM END OF THE BASIN, AND SHALL BE DETERMINED BY THE RFQUIREMENTS OF NOTE 3, BUT SHALL NOT BE LESS THAN CURB FACE PLUS 12 INCHES.
   - V_I = THE DIFFERENCE IN ELEVATION BETWEEN THE TOP OF THE CURB AND THE INVERT OF THE INLET. NOTED ON THE PROJECT PLANS.
   - H = NOTED ON THE PROJECT PLANS.
   - W = NOTED ON THE PROJECT PLANS.
   - A = THE ANGLE, IN DEGREES, INTERCEPTED BY THE CENTERLINE OF THE CONNECTOR PIPE AND THE CATCH BASIN WALL TO WHICH THE CONNECTOR PIPE IS ATTACHED.
5. PLACE CONNECTOR PIPES AS INDICATED ON THE PROJECT PLANS. UNLESS OTHERWISE SPECIFIED, THE CONNECTOR PIPE SHALL BE LOCATED AT THE DOWNSTREAM END OF THE BASIN. WHERE THE CONNECTOR PIPE IS SHOWN AT A CORNER, THE CENTERLINE OF THE PIPE SHALL INTERSECT THE INSIDE CORNER OF THE BASIN. THE PIPE MAY BE CUT AND TRIMMED AT A SKEW NECESSARY TO INSURE MINIMUM 3-INCH PIPE EMBEDMENT, ALL AROUND, WITHIN THE CATCH BASIN WALL, AND 3-INCH RADIUS OF ROUNDING OF STRUCTURE CONCRETE, ALL AROUND, ADJACENT TO PIPE ENDS. A MONOLITHIC CATCH BASIN CONNECTION SHALL BE USED TO JOIN THE CONNECTOR PIPE TO THE CATCH BASIN WHENEVER ANGLE "A" IS LESS THAN 70 DEGREES OR GREATER THAN 110 DEGREES, OR WHENEVER THE CONNECTOR PIPE IS LOCATED IN A CORNER. THE OPTIONAL USE OF A MONOLITHIC CATCH BASIN CONNECTION IN ANY CASE IS PERMITTED. MONOLITHIC CATCH BASIN CONNECTIONS MAY BE CONSTRUCTED TO AVOID CUTTING STANDARD LENGTHS OF PIPE.
6. NOT USED.
7. DOWELS ARE REQUIRED AT EACH CORNER AND AT 7 FEET ON CENTER (MAXIMUM) ALONG THE BACKWALL.
8. THE FOLLOWING STANDARD PLANS ARE INCORPORATED HEREIN:

   308 MONOLITHIC CATCH BASIN CONNECTION
   309 CATCH BASIN REINFORCEMENT
   9-17 CATCH BASIN FACE PLATE ASSEMBLY AND PROTECTION BAR
   9-9 CATCH BASIN MANHOLE FRAME AND COVER

AMERICAN PUBLIC WORKS ASSOCIATION – SOUTHERN CALIFORNIA CHAPTER	STANDARD PLAN
CURB OPENING CATCH BASIN	**300-1**
	SHEET 2 OF 2

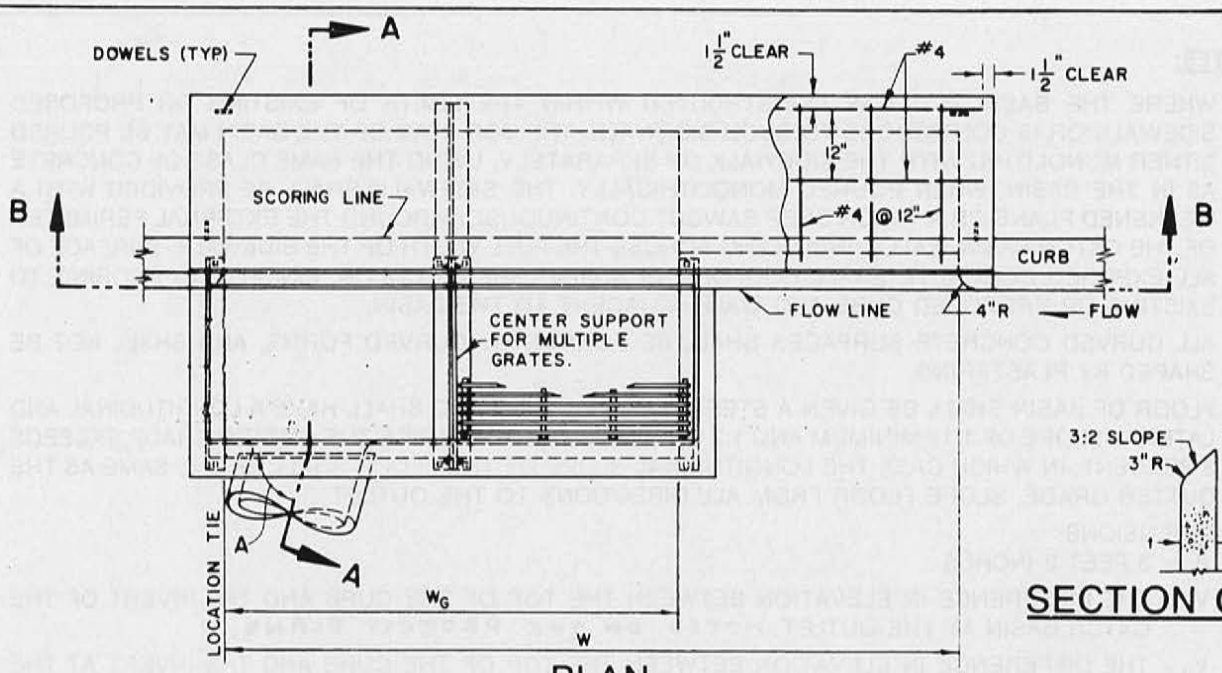

PLAN

SECTION C-C

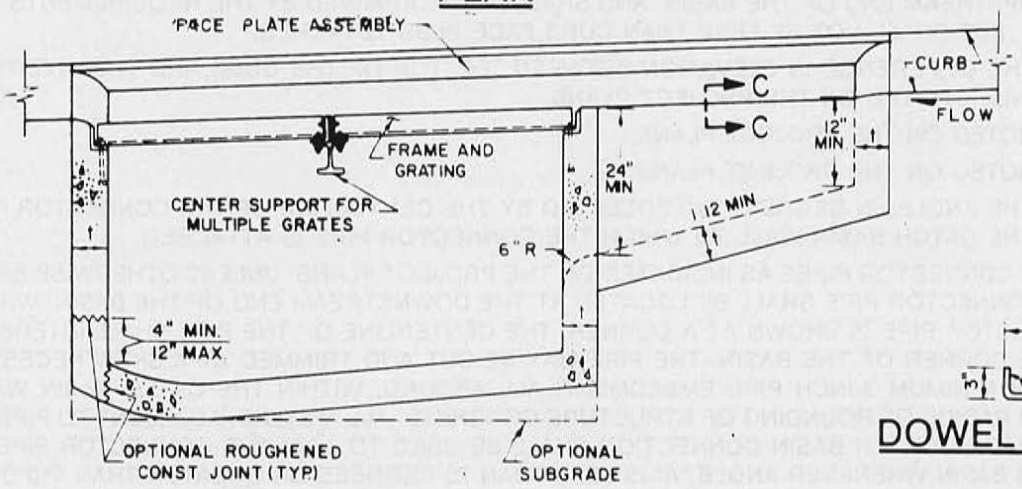

SECTION B-B

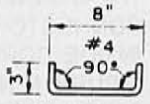

DOWEL DETAIL

STRUCTURAL DATA

WALL AND SLAB DIMENSIONS AND REINFORCEMENT REQUIREMENTS

MAXIMUM			t-IN.	WALL			FLOOR
W-FT	GRATES	V-FT.		FRONT	REAR	END	
7	1	4	6	NO REINFORCEMENT REQUIRED			
7	1	8	8				
7	1	10	10				
14	3	4	6				
14	2	8	8				
14	2	10	10				
14	2	12	10				
28	6	4	6				
28	6	6	8				
28	7	4	6				
28	7	8	8				
28	7	10	10				
28	7	12	10				

FOR W>28, V>12, OR NO. OF GRATES >7 SEE PROJECT PLANS

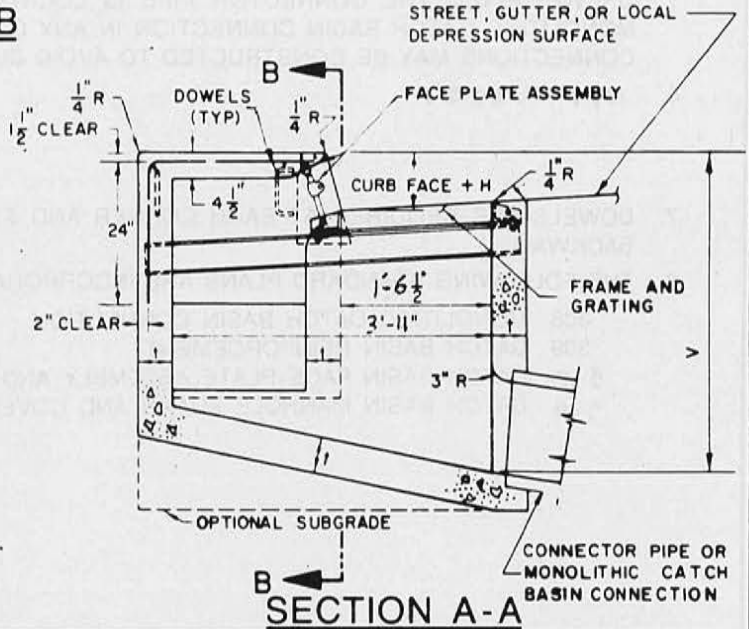

SECTION A-A

AMERICAN PUBLIC WORKS ASSOCIATION – SOUTHERN CALIFORNIA CHAPTER

PROMULGATED BY THE APWA-AGC JOINT COOPERATIVE COMMITTEE
1984
REV. 1992

CURB OPENING CATCH BASIN WITH GRATING(S) AND DEBRIS SKIMMER

STANDARD PLAN
301-1
SHEET 1 OF 2

NOTES:

1. WHERE THE BASIN IS TO BE CONSTRUCTED WITHIN THE LIMITS OF EXISTING OR PROPOSED SIDEWALK OR IS CONTIGUOUS TO SUCH SIDEWALK, THE TOP SLAB OF THE BASIN MAY BE POURED EITHER MONOLITHIC WITH THE SIDEWALK OR SEPARATELY, USING THE SAME CLASS OF CONCRETE AS IN THE BASIN. WHEN POURED MONOLITHICALLY, THE SIDEWALK SHALL BE PROVIDED WITH A WEAKENED PLANE OR A 1-INCH DEEP SAWCUT CONTINUOUSLY AROUND THE EXTERNAL PERIMETER OF THE CATCH BASIN WALLS, INCLUDING ACROSS THE FULL WIDTH OF THE SIDEWALK. SURFACE OF ALL EXPOSED CONCRETE SHALL CONFORM IN SLOPE, GRADE, COLOR, FINISH, AND SCORING TO EXISTING OR PROPOSED CURB AND WALK ADJACENT TO THE BASIN.
2. ALL CURVED CONCRETE SURFACES SHALL BE FORMED BY CURVED FORMS, AND SHALL NOT BE SHAPED BY PLASTERING.
3. FLOOR OF BASIN SHALL BE GIVEN A STEEL TROWEL FINISH. FLOOR OF GRATING PORTION SHALL HAVE A LONGITUDINAL AND LATERAL SLOPE OF 1:12 MINIMUM AND 1:3 MAXIMUM, EXCEPT WHERE THE GUTTER GRADE EXCEEDS 8 PERCENT, IN WHICH CASE THE LONGITUDINAL SLOPE OF THE FLOOR SHALL BE THE SAME AS THE GUTTER GRADE. SLOPE FLOOR FROM ALL DIRECTIONS TO THE OUTLET.
4. DIMENSIONS:
   - V = THE DIFFERENCE IN ELEVATION BETWEEN THE TOP OF THE CURB AND THE INVERT OF THE CATCH BASIN AT THE OUTLET. NOTED ON THE PROJECT PLANS.
   - V_I = THE DIFFERENCE IN ELEVATION BETWEEN THE TOP OF THE CURB AND THE INVERT OF THE INLET. NOTED ON THE PROJECT PLANS.
   - H = NOTED ON THE PROJECT PLANS.
   - W = 7 FEET UNLESS OTHWERWISE NOTED ON THE PROJECT PLANS.
   - W_G = 2 FEET 11-3/8 INCHES FOR ONE GRATING; ADD 3 FEET 5-3/8 INCHES FOR EACH ADDITIONAL GRATING. ONE GRATING IS REQUIRED UNLESS OTHERWISE SHOWN ON THE PROJECT PLANS.
   - A = THE ANGLE, IN DEGREES, INTERCEPTED BY THE CENTERLINE OF THE CONNECTOR PIPE AND THE CATCH BASIN WALL TO WHICH THE CONNECTOR PIPE IS ATTACHED.
5. PLACE CONNECTOR PIPES AS INDICATED ON THE PROJECT PLANS. UNLESS OTHERWISE SPECIFIED, THE CONNECTOR PIPE SHALL BE LOCATED AT THE DOWNSTREAM END OF THE BASIN. WHERE THE CONNECTOR PIPE IS SHOWN AT A CORNER, THE CENTERLINE OF THE PIPE SHALL INTERSECT THE INSIDE CORNER OF THE BASIN. THE PIPE MAY BE CUT AND TRIMMED AT A SKEW NECESSARY TO INSURE MINIMUM 3-INCH PIPE EMBEDMENT, ALL AROUND, WITHIN THE CATCH BASIN WALL, AND 3-INCH RADIUS OF ROUNDING OF STRUCTURE CONCRETE, ALL AROUND, ADJACENT TO PIPE ENDS. A MONOLITHIC CATCH BASIN CONNECTION SHALL BE USED TO JOIN THE CONNECTOR PIPE TO THE CATCH BASIN WHENEVER ANGLE "A" IS LESS THAN 70 DEGREES OR GREATER THAN 110 DEGREES, OR WHENEVER THE CONNECTOR PIPE IS LOCATED IN A CORNER. THE OPTIONAL USE OF A MONOLITHIC CATCH BASIN CONNECTION IN ANY CASE IS PERMITTED. MONOLITHIC CATCH BASIN CONNECTIONS MAY BE CONSTRUCTED TO AVOID CUTTING STANDARD LENGTHS OF PIPE.
6. NOT USED.
7. DOWELS ARE REQUIRED AT EACH CORNER AND AT 7 FEET ON CENTER (MAXIMUM) ALONG THE BACKWALL.
8. THE FOLLOWING STANDARD PLANS ARE INCORPORATED HEREIN:

   308 MONOLITHIC CATCH BASIN CONNECTION
   309 CATCH BASIN REINFORCEMENT
   9-17 CATCH BASIN FACE PLATE ASSEMBLY AND PROTECTION BAR
   9-14,15 FRAME AND GRATING FOR CATCH BASINS
   9-16 CENTER SUPPORT ASSEMBLY FOR MULTIPLE GRATES

AMERICAN PUBLIC WORKS ASSOCIATION – SOUTHERN CALIFORNIA CHAPTER	STANDARD PLAN
CURB OPENING CATCH BASIN WITH GRATING(S) AND DEBRIS SKIMMER	**301-1**
	SHEET 2 OF 2

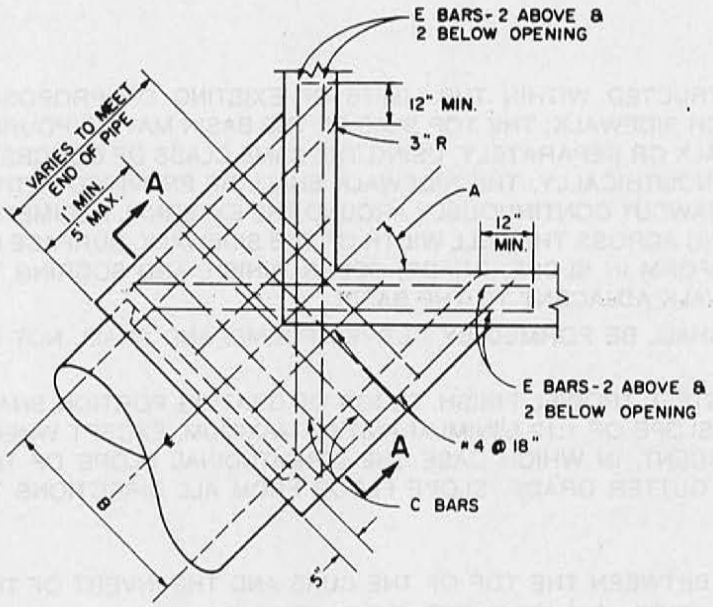

PLAN
CORNER CONNECTION

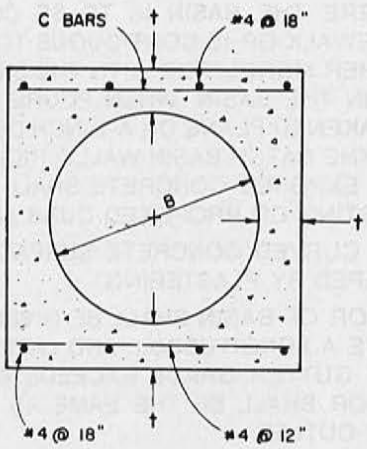

SECTION A-A

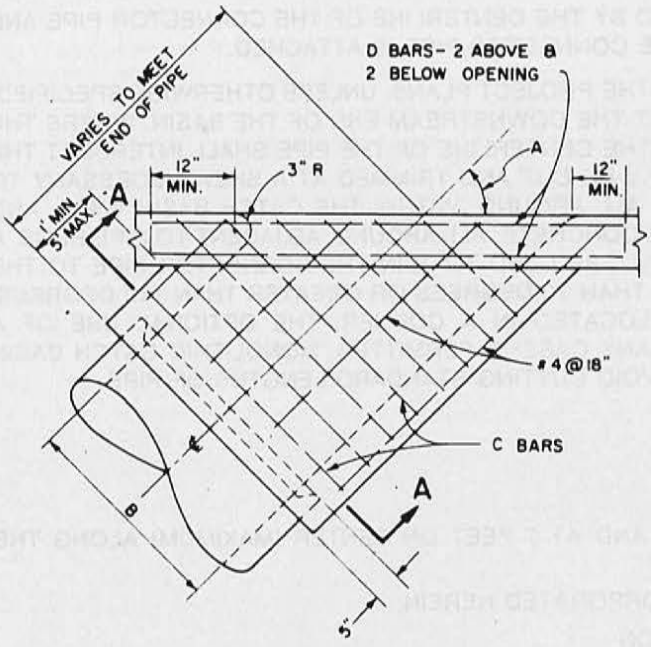

PLAN
SIDE CONNECTION

STRUCTURAL DATA							
B	t	C BARS	D&E BARS	B	t	C BARS	D&E BARS
12"	4"	#4 @ 6"	#5	42"	7 1/2"	#5 @ 6"	#6
15"	4 1/4"			45"	7 3/4"		
18"	4 1/2"			48"	8"		
21"	5"			51"	8 1/2"		
24"	5 1/4"			54"	9"		
27"	5 1/2"			57"	9 1/4"		
30"	6"			60"	9 1/2"		
33"	6 1/4"			63"	10"		
36"	6 1/2"			66"	10 1/4"		
39"	7"			69"	10 3/4"		
				72"	11"		
FOR B GREATER THAN 72" SEE PROJECT PLAN							

AMERICAN PUBLIC WORKS ASSOCIATION – SOUTHERN CALIFORNIA CHAPTER

PROMULGATED BY THE APWA-AGC JOINT COOPERATIVE COMMITTEE 1984

MONOLITHIC CATCH BASIN CONNECTION

STANDARD PLAN
308-0
SHEET 1 OF 2

NOTES:

1. REINFORCING STEEL SHALL BE 1-1/2 INCHES CLEAR FROM FACE OF CONCRETE UNLESS OTHERWISE SHOWN.
2. REINFORCING STEEL FOR INSIDE FACE OF CATCH BASIN SHALL BE CUT AT CENTER OF OPENING AND BENT INTO WALLS OF MONOLITHIC CATCH BASIN CONNECTION. REINFORCING STEEL FOR OUTSIDE FACE OF CATCH BASIN SHALL BE CUT 2 INCHES CLEAR OF OPENING.
3. CONNECTION SHALL BE PLACED MONOLITHIC WITH CATCH BASIN. THE ROUNDED EDGE OF OUTLET SHALL BE CONSTRUCTED BY PLACING CONCRETE WITH THE SAME CLASS OF CONCRETE AS THE CATCH BASIN AGAINST A CURVED FORM WITH A RADIUS OF 3 INCHES.
4. CONNECTIONS SHALL BE CONSTRUCTED WHEN:
   (A) PIPES INLET OR OUTLET THROUGH CORNER OF CATCH BASIN.
   (B) ANGLE A FOR PIPES THROUGH 30 INCHES IN DIAMETER IS LESS THAN 70 DEGREES OR GREATER THAN 110 DEGREES.

AMERICAN PUBLIC WORKS ASSOCIATION – SOUTHERN CALIFORNIA CHAPTER	STANDARD PLAN
MONOLITHIC CATCH BASIN CONNECTION	**308-0**
	SHEET 2 OF 2

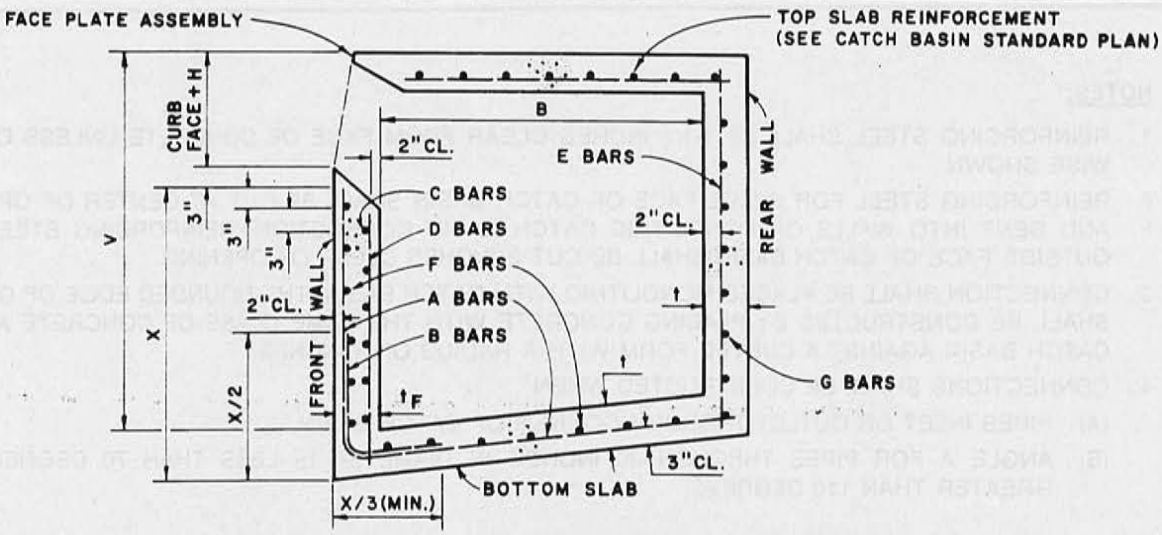

TYPICAL REINFORCEMENT DETAILS

MAX. W	MAX. V	t	t_F	A & B BARS	C BARS	D BARS	E BARS	F BARS	G BARS
3.5′	8′	6″	—	—	—	—	—	—	—
3.5′	12′	8″	8″	—	—	—	—	—	—
7′	6′	6″	6″	—	—	—	—	—	—
7′	12′	8″	8″	—	—	—	—	—	—
14′	4′	6″	6″	—	#4 @ 12″	#4 @ 18″	—	—	—
14′	8′	6″	8″	—	#4 @ 12″	#4 @ 18″	—	—	—
14′	12′	8″	10″	—	#4 @ 6″	#4 @ 18″	—	—	—
28′	4′	6″	6″	#4 @ 24″	—	—	—	#4 @ 18″	—
28′	5′	6″	8″	#4 @ 24″	—	—	—	#4 @ 18″	—
28′	6′	6″	8″	#4 @ 18″	—	—	—	#4 @ 18″	—
28′	7′	8″	8″	#4 @ 17″	—	—	—	#4 @ 18″	—
28′	8′	8″	8″	#4 @ 13″	—	—	—	#4 @ 18″	—
28′	9′	8″	10″	#4 @ 15″	—	—	—	#4 @ 18″	—
28′	10′	8″	10″	#4 @ 12″	—	—	—	#4 @ 18″	—
28′	11′	8″	10″	#5 @ 15″	—	—	#4 @ 10″	#4 @ 18″	#4 @ 18″
28′	12′	8″	10″	#6 @ 18″	—	—	#4 @ 9″	#4 @ 18″	#4 @ 18″
FOR W > 28′, V > 12′ OR B > 4′ SEE PROJECT PLANS									

CURB OPENING CATCH BASIN REINFORCEMENT

V(ft.) MAX.	t (in.)	SIDE AND END WALL STEEL G BARS
4	6	#4 @ 10″
8	8	#4 @ 6″
12	10	#5 @ 6″
FOR V > 12′ SEE PROJECT PLANS		

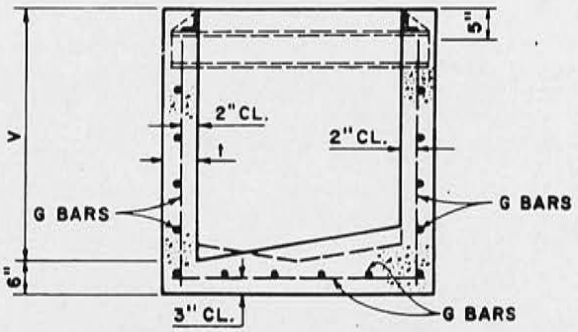

GRATING CATCH BASIN REINFORCEMENT

TYPICAL REINFORCEMENT DETAILS

NOTE: UNLESS OTHERWISE SPECIFIED REINFORCEMENT FOR CURB OPENING AND GRATING CATCH BASINS SHALL TERMINATE 2 INCHES FROM FACE OF CONCRETE.

AMERICAN PUBLIC WORKS ASSOCIATION – SOUTHERN CALIFORNIA CHAPTER

PROMULGATED BY THE APWA-AGC JOINT COOPERATIVE COMMITTEE 1984

CATCH BASIN REINFORCEMENT

STANDARD PLAN **309-0**

SHEET 1 OF 1

SECTION 10

GRADING

CONTENTS **Page**

10-1	General Requirements	10-1
10-2	Plan Sheet details	10-1
10-3	Rolling Terrain Grading	10-2
10-4	Boundary Grading	10-2
10-5	Interior Grading	10-3
10-6	Retaining Walls	10-3
10-7	Grading at Trees	10-4
10-8	Certifying Pad Elevations	10-5
10-9	Maintenance of Access to Utility Facilities	10-6

SECTION 10
GRADING

10-1 GENERAL REQUIREMENTS: Grading shall conform to Sacramento County Code Chapters 16.04 and 16.44, except as modified by these Improvement Standards.

10-2 PLAN SHEET DETAILS: In addition to the requirements of Section 3, the following items shall be included on grading plans:

A. Slope symbols for 3:1 slopes or steeper, where grade difference exceeds one foot.

B. Ridge and/or valley delineation.

C. Typical lot grading details.

D. Proposed spot and/or pad elevations.

E. Flow directional arrows (off-site, around perimeter of development when adjacent to developed areas) and perimeter elevations at the property line.

F. Existing spot elevations and/or contour lines on-site and off-site around perimeter of development. Where the existing terrain is not relatively flat, contour lines shall be mandatory. The spot elevations or contour lines shall be extended off-site for a minimum distance of 50 feet (flat terrain – 100 feet minimum) when adjacent to undeveloped areas.

G. Existing vegetation including trees (variety, size and elevation at base of all trees nine inches or larger).

H. Retaining wall details (symbols, construction details, limits, and top and bottom of wall elevations).

I. Back of sidewalk or curb elevations.

J. Location and grate elevation of storm drain inlets

K. Typical sections across side yard property lines where the difference in finish pad elevations exceeds two feet. Delineated on the section shall be the side yard drainage swale and minimum distance between the proposed building and the side yard property line.

L. Names of adjacent subdivisions.

M. Off-site intersecting property lines.

N. Signature block for certification of pad elevations by Consulting Engineer for subdivision projects.

O. For all export projects:

1. Location and plan of spoils disposal
2. Spoils slopes of 3:1 or flatter
3. Finish spoils heights of 3 feet or less
4. No spoils within 5 feet of property lines.
5. Spoils shall not block drainage
6. Spoils shall be leveled prior to acceptance of project.

P. Erosion control details as required in Section 11.

Q. Overland release grades and details

10-3 ROLLING TERRAIN GRADING: Grading or rolling terrain shall be accomplished in a manner whereby the profile of the rolling terrain is maintained as close to that which exists as practically possible. Interior cuts and fills shall be no greater than 5 feet unless approved by the Director.

10-4 BOUNDARY GRADING: Special attention shall be given to grading adjacent to the exterior perimeter property line of a development. All adverse effects to off-site properties adjacent to new developments shall be reduced to an absolute minimum. Fills and cuts adjacent to the exterior perimeter property line shall be designed in accordance with the following:

A. **Fills**--Fills in excess of 2 feet shall not be allowed unless permitted by project conditions of approval. When fills are unavoidable, they shall conform to Standard Drawing 10-1. If possible, fill slopes shall be constructed off-site, with the property line being situated at the top of the fill. A right of entry shall be required for all off-site fills prior to plan approval. A note shall be placed on the plans listing the name of the grantor of the right of entry and the date obtained. Suggested rights of entry forms are available at LDSIR.

B. **Cuts**--Cuts shall be constructed in accordance with Standard Drawing 10-2, except that the slope setback from the property line to the slope hinge point shall be a minimum of 2 feet for all slopes steeper than 5:1.

C. **Fences**--When fences are required, they shall be placed within one foot of the property line. The height of a fence shall be measured from the highest ground adjacent to the fence, regardless of the side that is developing.

10-5 INTERIOR GRADING: Grading at interior property lines within a shall conform to Standard Drawing 10-2 and the following:

A. **Property Lines**--Property lines shall be situated at the top of fill and cut slopes. Grading shall be such that surface runoff will not be allowed to sheet flow down the slopes steeper than 5:1. Property lines shall be situated at the top sides of retaining walls with a minimum setback of 1.0 foot from the property line to the retaining wall. See Standard Drawing 10-3.

B. **Slopes**--The maximum earth slopes allowed shall be 2:1 (horizontal to vertical) and the minimum shall be 1%. Minimum asphalt concrete surface slopes shall be 1% and minimum portland cement concrete slopes shall be 0.25.

C. **Cross Lot Surface Flow**--Grading of residential or duplex lots shall be such that surface flow shall be restricted to a maximum of one lot flowing across another lot. Developments with situations that mandate grading which allows more than one lot to drain across another lot shall be required to provide a pipe system to maintain the one-lot rule. Any deviation from the above shall receive specific approval by the Director.

D. Lots on the low side of streets and at sag points shall be graded in such a manner as to preclude flooding of the building pad area in the event of malfunction or overloading of the street drainage system. All building pad grades shall be a minimum of 1 foot above the overland release elevation.

E. Commercial developments shall not be allowed to "sheet drain" more than twenty-five feet of site frontage to a public street. Area outside the 25-foot strip shall be graded to drain into an on-site drainage system.

10-6 RETAINING WALLS: Retaining walls shall be in accordance with the following:

A. Redwood retaining walls for interior property lines shall conform to Standard Drawing 10-3 as a minimum design. Construction details of redwood retaining walls on the plans shall not be required when reference to Standard Drawing 10-3 is made. When fences are to be constructed atop redwood retaining walls, 4" x 6" posts at 4' centers shall extend above the retaining wall and act as fence posts.

B. Masonry or concrete retaining walls for boundary or phase lines shall conform to Standard Drawing 10-4 as a minimum design. Construction details of masonry or concrete retaining walls on the plans shall not be required when reference is made to Standard Drawing 10-4.

C. Design calculations stamped and signed by the Consulting Engineer shall be required for all walls exceeding 24 inches in height (excluding footing height) or when a fence greater than 6 feet high is an integral part of the wall.

D. All retaining walls within 8 feet of boundary, phase, or right of way lines shall be either concrete or masonry.

E. Grading shall be such that on-site-runoff will not flow over retaining walls.

F. Where pads on adjacent lots are 10' apart or less and the difference in elevation exceeds 2.5 feet, a retaining wall will be required as per Standard Drawings 10-3 or 10-4.

10-7 GRADING AT TREES: Grading near trees shall be in accordance with the following:

A. Grading under trees with a 6-inch diameter trunk or larger, measured 4-1/2 feet above the ground, in healthy condition, and all oak trees shall be given special attention. Every reasonable effort shall be made to avoid removing trees or creating conditions adverse to the tree's health.

B. The natural ground within the drip line of trees, especially oak trees, shall remain as undisturbed as possible. Grading within the drip line of an oak tree requires a tree permit.

C. Trees with a 6-inch or larger trunk diameter that are questionable as to health or safety shall be reviewed by the County Tree Coordinator. If a tree is found to be not worthy of saving, the Director can approve its removal.

D. Cross sections may be required where trees are located adjacent to roadways, new slopes or critical areas. In addition, a dimension from the face of a tree to some critical point or line may be required.

E. The following development control measures shall be placed as notes and incorporated into the designs of projects which have oak trees to be saved:

1. Only those oak trees marked with an "X" are to be removed during construction. (A Tree Removal Permit and/or environmental

document is required for removal of any oak tree with a 6-inch diameter trunk or larger, measured at 4-1/2 feet above the ground.)

2. During construction, there shall be no grading, trenching, earth removal or addition, building pad formation or earth alteration of any kind within the drip line of any oak tree not marked with an "X".

3. Prior to the construction phase of the project, a physical barricade shall be erected and maintained coincidental to the drip lines of all oak trees not marked with an "X". Within this barrier no construction related activities shall be allowed including, but not limited to, vehicular parking or material storage. The physical barricade shall be T-bars and 4-foot high hogwire fencing, or orange fabric mesh.

4. No trenching shall be allowed within the driplines of oak trees. If it is absolutely necessary to install underground utilities within the driplines of an oak tree, they shall be either bored or drilled.

5. Paving within the driplines of oak trees shall be stringently minimized. When it is absolutely necessary, porous paving material such as turfstone, interlocking pavers, or others material specifically approved by the Director shall be used and no paving shall occur within 5 feet of their trunks. When asphalt or concrete paving is installed, piped aeration systems can be used, as an alternate to porous paving material, only when the paving material is installed within 6 inches from the original ground elevation. The piped aeration systems shall not be installed any deeper than 1 foot from the original ground elevation. The County Tree Coordinator shall approve the piped aeration system prior to construction. No aeration systems shall be constructed within the County right of way.

10-8 CERTIFYING PAD ELEVATIONS: Upon completion of the grading and prior to acceptance of the subdivision improvements by the County, the Consulting Engineer shall verify the final pad elevations. The elevations shall be verified at the center and the corner of each pad. Elevation deviations or more than 0.20 feet shall be noted on the plans.

A signature block, certifying that final graded elevations in the field are the same as those shown on the plans, shall be included on the subdivision grading plans. The Consulting Engineer shall sign the signature block, certifying to the above, and shall provide three sets of record (as-built) grading plans to the Director.

10-9 MAINTENANCE OF ACCESS TO UTILITY FACILITIES: Continuous, suitable access shall be maintained during all stages of construction of any facility owned or operated by a utility/district providing essential services, i.e. sanitary sewer, water, drainage, electricity, gas, telephone, etc.

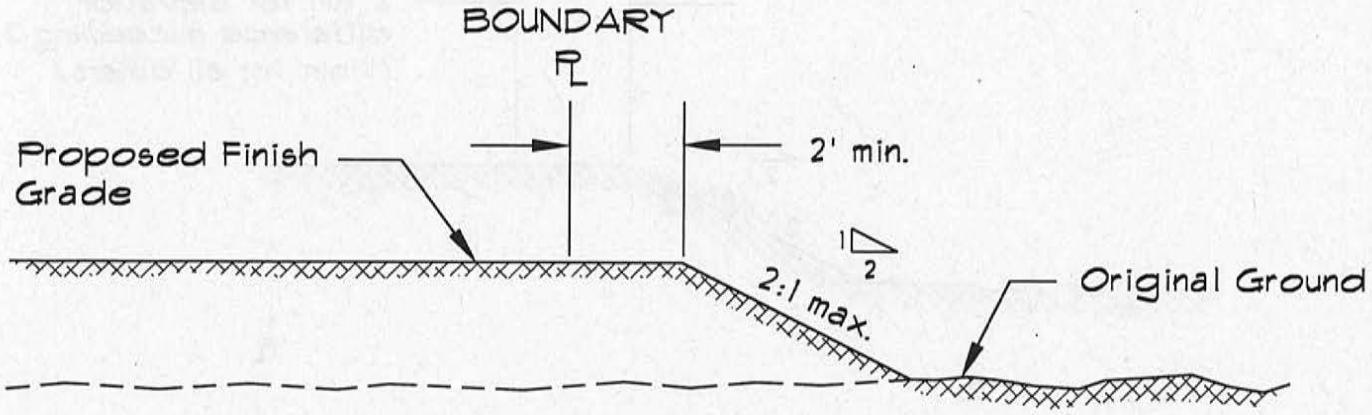

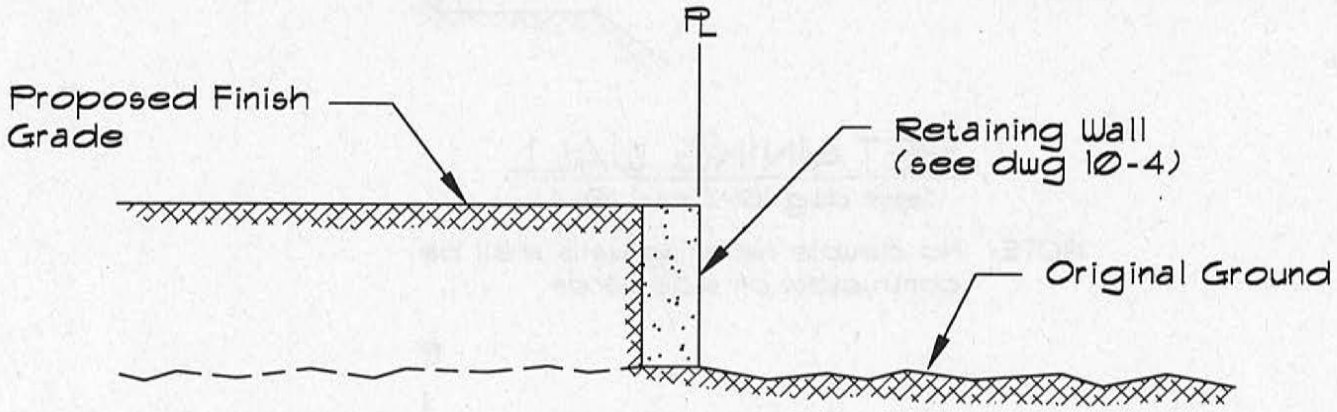

Cheryl Creson
Director

SACRAMENTO COUNTY PUBLIC WORKS AGENCY	
Exterior Perimeter Property Line Grading for Fill Areas	
Dec-98	10-1

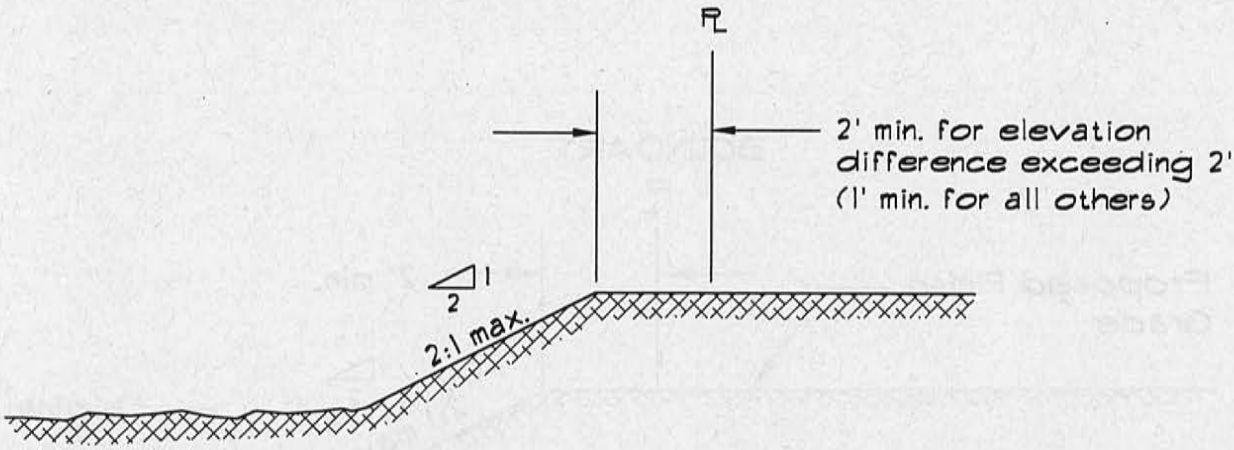

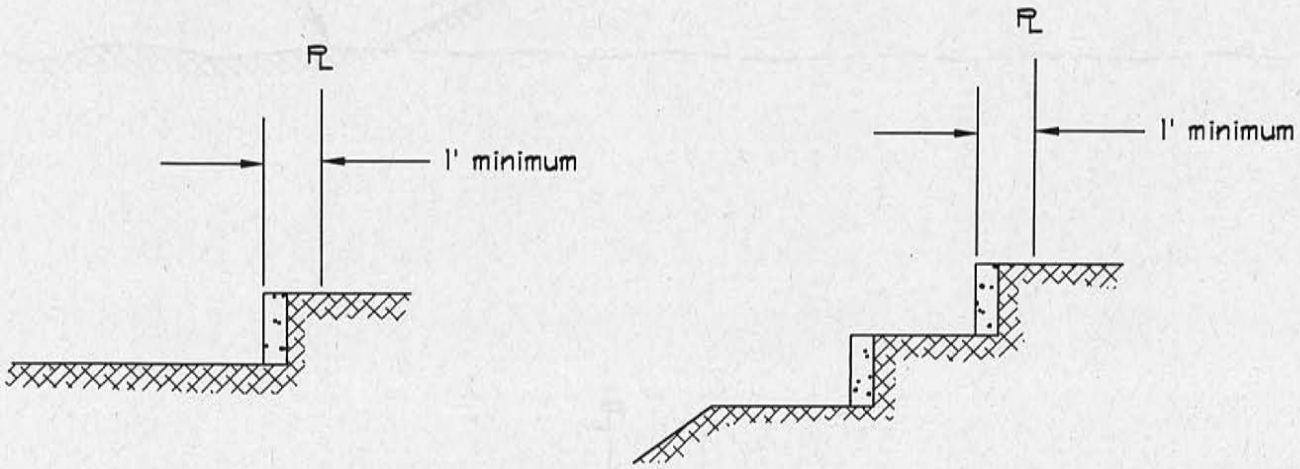

RETAINING WALL

(see dwg 10-3 and 10-4)

NOTE: No double retaining walls shall be contructed on side yards

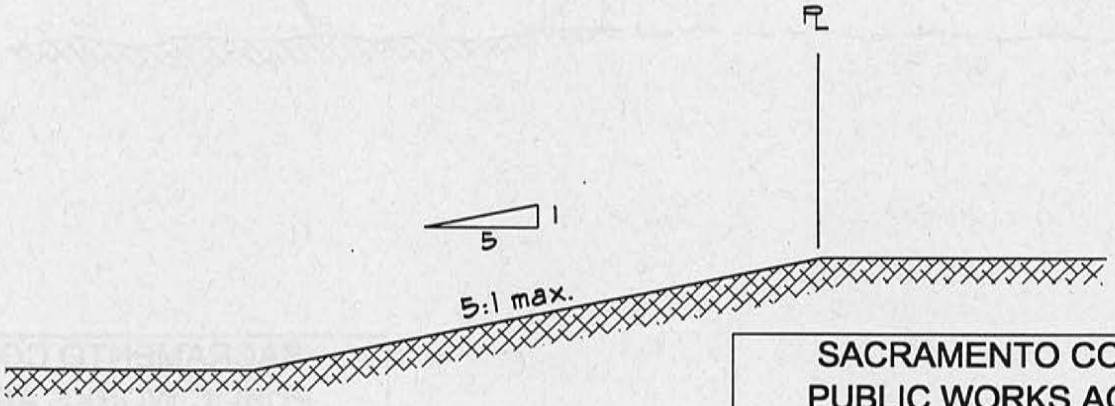

Cheryl Creson
Director

SACRAMENTO COUNTY PUBLIC WORKS AGENCY	
Grading for Interior Property Lines and Perimeter Property Lines in Cut Areas	
Dec-98	10-2

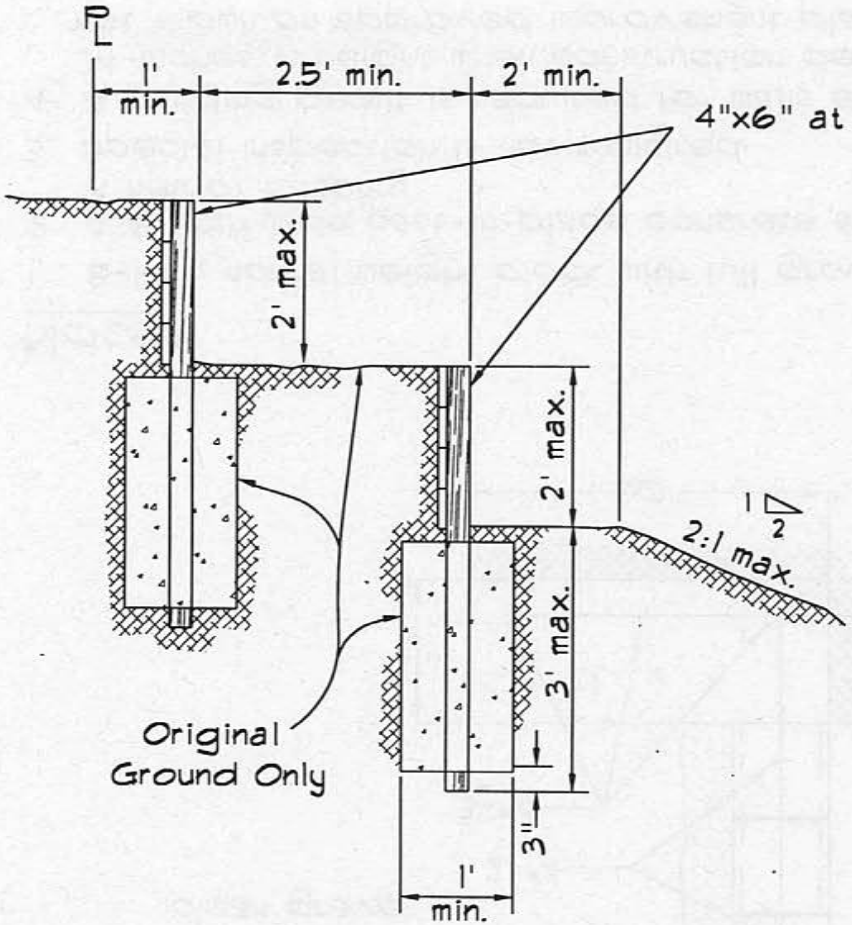

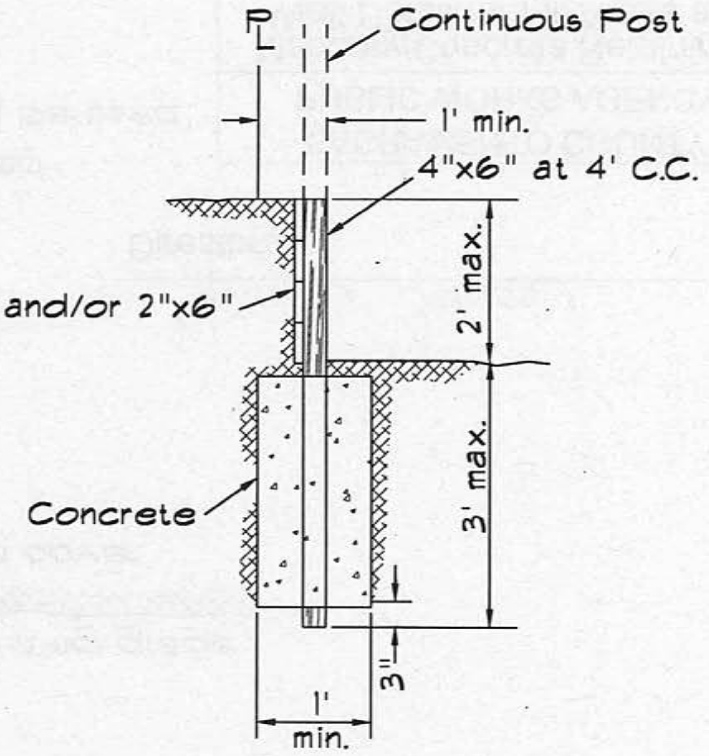

Cheryl Creson
Director

NOTES:

1. Material for walls shall be grade No. 2 or better redwood with no open grain material
2. Wood walls shall not be used adjacent to public rights of way.
3. All walls within 8 feet of a boundary or project phase line shall be constructed with masonary or concrete.
4. 4-inch by 6-inch posts at 4-foot on center shall be used as fence posts when fences are attached to retaining walls.
5. No double retaining walls shall be constructed on side yards.

SACRAMENTO COUNTY PUBLIC WORKS AGENCY	
Wood Retaining Wall Details For Interior Property Lines	
Dec-98	10-3

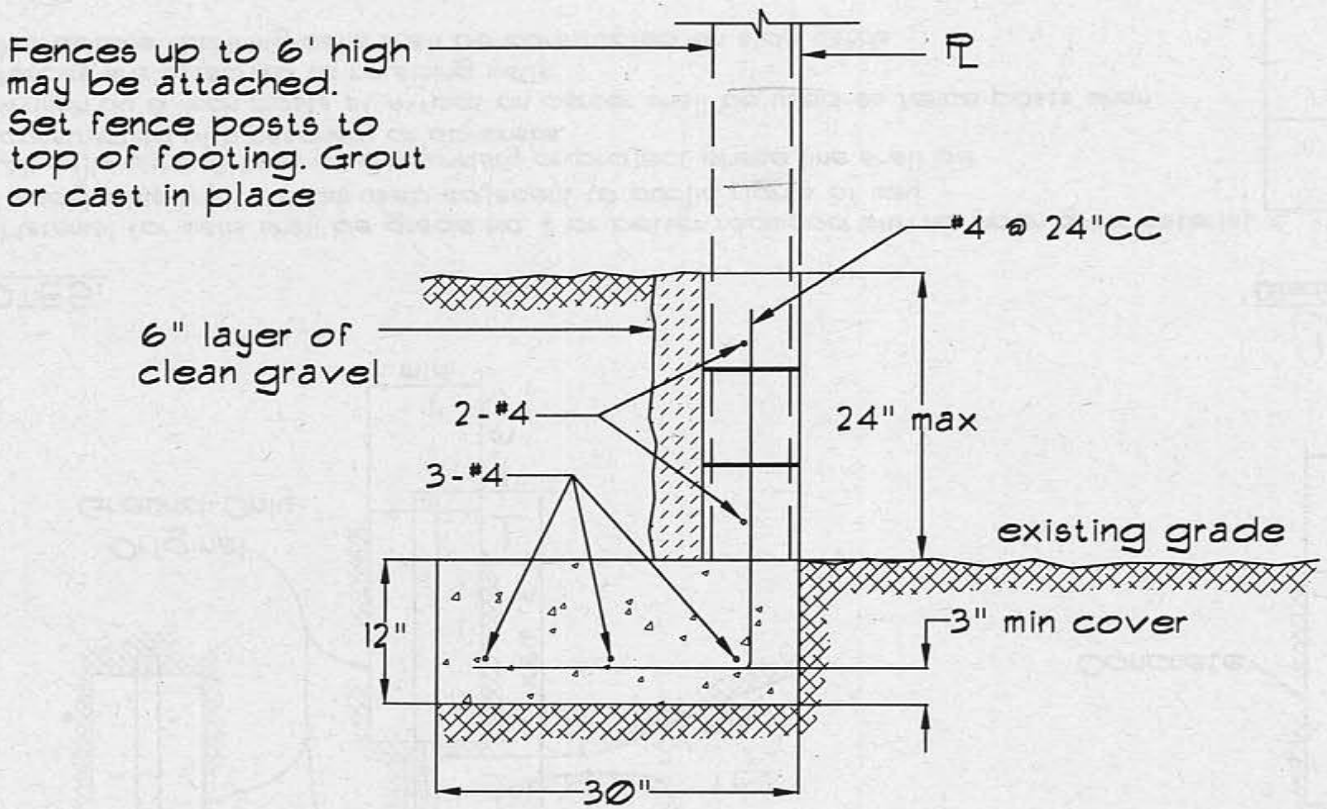

$f'_c = 2000$ psi

$f'_m = 1500$ psi

$f'_y = 60{,}000$ psi

Cheryl Treadwell

Director

Notes

1. 8-inch, normal weight block with full grouting required
2. A 6-inch wide cast-in-place concrete stem wall may be used in lieu of masonry
3. Special inspection is not required
4. A building permit is required for walls exceeding 24-inches in height when construction details are not shown on approved improvement plans

SACRAMENTO COUNTY PUBLIC WORKS AGENCY	
Masonry/Concrete Retaining Wall Detail for Fill Areas at Boundary and Project Phase Lines	
Jan-99	10-4

SECTION 11
EROSION AND SEDIMENT CONTROL

11-1 CONTENTS:

Section	Item
11-2	Definitions
11-3	Erosion and Sediment Control Plan
11-4	Required BMPs
11-5	Hydroseeding
11-6	Existing Vegetation
11-7	Matting
11-8	Stabilized Construction Access
11-9	Sediment Trap
11-10	Sediment Basin
11-11	Filter Barrier
11-12	Silt Fence
11-13	Straw Bale Barrier
11-14	Straw Bale Inlet Filter
11-15	Inlet Filter
11-16	Inlet Filter Bag
11-17	Concrete Stamp

11-2 DEFINITIONS:

A. **BMP** – Best Management Practice.

11-3 EROSION AND SEDIMENT CONTROL PLAN: Improvement Plans shall include an Erosion and Sediment Control Plan, which shall be prepared and approved per the requirements of Chapter 16.44 of Title 16 of the Sacramento County Code, Land Grading and Erosion Control. In addition, the project shall comply with the requirements of the State Water Resources Control Board General Construction Activity Storm Water Permit.

For projects over five acres, a notice of intent (NOI) must be filed to obtain coverage under the State's General Construction Permit, which must be done prior to construction. As a condition of the State General Construction Permit, a Storm Water Pollution Prevention Plan (SWPPP) must also be developed for the project. The program is administered by the State Water Resources Control Board, which can provide all information necessary to complete and file the necessary documents.

Erosion and Sediment Control Plans shall include erosion controls and sediment controls from this chapter to minimize erosion and the transport of sediments. These plans may be incorporated into the Grading Plans or on separate sheets for clarity.

11-4 REQUIRED BMPs: The following BMPs shall be required on all projects: inlet protection at all storm drain inlets (Sections 11-14, 15, 16) and concrete stamps at all new storm drain inlets (Section 11-17). In addition, each construction site shall provide designated concrete, paint and waste disposal locations as necessary. Other requirements include:

A. Access points to the construction site shall have Stabilized Construction Access (11-8).

B. Areas undisturbed by grading activities, protected areas (oak trees, wetlands, etc.), undeveloped portions of a job site shall have Existing Vegetation (11-6), Straw Bale Barrier (11-13), or Silt Fence (11-12).

C. Perimeter protection along property lines shall have Existing Vegetation (11-6), Straw Bale Barrier (11-13), or Silt Fence (11-12).

D. Slopes shall have Hydroseeding (11-5) or Matting (11-7).

E. Toe of Slope shall have Straw Bale Barrier (11-13) or Silt Fence (11-12).

F. Buffer strips at back of walk shall have Hydroseeding (11-5), or Straw Bale Barrier (11-13) or Filter Barrier (11-11) in conjunction with hydroseeding.

G. Road beds shall have Straw Bale Barrier (11-13), Silt Fence (11-12), or Sediment Trap (11-9).

H. Dead end streets shall have Existing Vegetation (11-6), Hydroseeding (11-5), or Sediment Trap (11-9).

I. Projects that include detention basins shall have a Sediment Basin (11-10)

Design information is available in Section 5 of the Erosion and Sediment Control Manual.

11-5 HYDROSEEDING:

A. **Definition** - The planting of new grass to stabilize and reduce the erosion potential of the soil.

B. **Applicability** - Hydroseeding shall be applied in the following conditions:

1. Graded or cleared areas subject to erosion from sheet flow.

2. Six-meter (20-foot) wide buffer strips at the back of walk.

3. As perimeter control along property lines where existing vegetation does not exist.

If slopes to be hydroseeded are steeper than 3:1, hydroseeding shall be used in combination with matting.

D. Design - Areas to be hydroseeded shall be clearly identified on the plans.

Planting shall conform to the following:

1. Timing - Hydroseeding shall be implemented in advance of the time when there is risk of erosion. To protect areas by October 1, hydroseeding shall be implemented no later than September 15.

2. Adjacent to wetlands and sensitive areas, the minimum width of a vegetated area draining into the affected area shall be 30 meters (100 feet) for slopes of 20:1 or flatter. When slopes are steeper than 20:1, additional measures shall be used as determined by the Director. Adjacent to improvements, the minimum width shall be 6 meters (20 feet).

11-6 EXISTING VEGETATION

A. Definition - The maintaining of areas of existing vegetation to utilize stable vegetated areas to reduce the amount of sediment in sheet flow runoff and to minimize the extent of disturbed area.

B. Applicability - Existing vegetation shall be used when currently vegetated areas can be integrated into the proposed project. Examples where existing vegetation shall be applicable include:

1. Buffer strips adjacent to wetlands and other sensitive areas.

2. As perimeter protection along property lines.

3. Undeveloped portions of a job site.

C. Design

1. Areas of vegetation to be preserved shall be clearly marked on plans and fenced or flagged in the field.

2. Traffic and stockpiles shall be located away from vegetated areas. Irrigation and maintenance shall be specified on the plans.

3. For appropriate widths of vegetated areas, refer to the specifications for hydroseeding (Section 11-5).

D. Maintenance - Irrigation and maintenance requirements shall be specified on the plans. Irrigation shall be provided as needed to maintain the vegetation.

11-7 MATTING

B. Definition – The application of natural or synthetic geotextile materials to the soil surface to assist in the establishment of vegetation and reduce runoff erosion

C. Applicability – Mats shall be applied in conjunction with hydroseeding (Section 11-5) where slopes exceed 3:1 or on exposed slopes when the timing is too late in the year for planting.

Mats shall ***not*** be applied in the following circumstances:

1. On excessively rocky sites.

2. For use with vegetation in the final phase if the vegetation is to be mowed.

D. Design

1. Areas of matting shall be clearly defined on the plans.

11-8 STABILIZED CONSTRUCTION ACCESS

A.. Definition - A stabilized access consisting of a pad of coarse aggregate underlain with filter cloth located where traffic enters or leaves a construction site to minimize tracking of sediment from a construction site onto paved streets.

B. Applicability - A stabilized construction site shall be applied at the following locations where construction traffic enters or leaves:

1. Paved public streets, sidewalks and rights-of-way.

2. Parking lots or other paved areas.

A stabilized construction site access is not required at sites where public streets or roads are unpaved.

C. Design

1. Placement of stabilized construction site access shall be clearly defined on the plans.

2. The stabilized construction site access shall be constructed per County of Sacramento Standard Construction Specifications Drawing 11-1.

2. The minimum length shall be 15 meters (50 feet) and the minimum width shall be 4.5 meters (15 feet) or greater if necessary to cover all vehicular ingress and egress.

4. This practice shall be supported by a vehicle wash area and street sweeping.

11-9 SEDIMENT TRAP

A. Definition - A small temporary basin formed by excavation to intercept and detain sediment laden runoff to detain runoff and allow sediment to settle. It is used to protect other drainage facilities and properties below the sediment trap.

C. Applicability - There are two types of sediment traps:

1. Vegetated outlet traps suitable for drainage areas of less than 2 hectares (5 acres).

2. Stabilized outlet traps, suitable for drainage areas from 2 to 4 hectares (5 to 10 acres).

Sediment traps shall ***not*** be applied in the following conditions:

2. The drainage area is greater than 4 hectares (10 acres).

4. In a creek or stream.

5. Uphill from a street or utility trench.

6. In areas subject to trespass.

D. Design

1. Placement of a sediment trap shall be clearly defined on the plans.

2. Sediment traps shall be constructed as the first step when there is mass clearing or grading and shall be located at the point where drainage discharges from a site.

3. Construction of sediment traps shall be per County of Sacramento Standard Construction Specifications Drawings 11-2 and 11-3.

4. The trap storage volume shall be designed for 70 cubic meters per hectare (35 cubic yards per acre) of contributing drainage area.

4. Side slopes shall be 3:1 or flatter and the maximum depth shall be 1.1 meters (3.5 feet).

6. The length of a sediment trap shall be 2 times it width (minimum).

11-10 SEDIMENT BASIN

A. **Definition** - A temporary basin formed by excavation to intercept and detain sediment laden runoff to detain runoff and allow sediment to settle. It is used to protect other drainage facilities and properties below the sediment basin.

B. **Applicability** - Sediment basins are suitable for incorporating into the construction of permanent facilities designed for flood control and water quality.

Sediment basins shall ***not*** be applied in the following conditions:

1. In a creek or stream.

2. Where the project site can be broken up into small drainage areas (4 hectares (10 acres) or less) where sediment traps can be used.

3. Where failure can cause property damage or loss of life.

4. In areas subject to trespass unless they are secured.

D. **Design** - Basins shall be located, sized and configured based on site-specific conditions. All basin designs are subject to approval by the Director. Refer to the design requirements of Section 11-15.

11-11 FILTER BARRIER

A. **Definition** - A barrier of filter fabric that has been entrenched and attached to supporting posts to reduce runoff velocity and detain sediment.

C. **Applicability** - Filter barriers shall ***not*** be applied in the following conditions:

1. Where concentrated flows exceeding 0.014 m^3/s (0.5 cfs) are expected.

2. Drainage areas of 0.4 hectares (1 acre) or more.

3. Where the slope is steeper than a 3:1.

4. In channels.

D. Design

1. Placement of a filter barrier shall be clearly defined on the plans.

2. Construction shall be per County of Sacramento Standard Construction Specifications Drawing 11-4.

3. The maximum slope length above the barrier shall be no more than 4.5 meters (15 feet) times the slope steepness expressed as a ratio. For example, a 3:1 slope above a barrier shall be no more than 13.5 meters (45 feet) long.

3. The depth of flow shall be evenly distributed across the barrier.

5. The barrier shall be placed on the contour and configured in the shape of a shallow arc with the ends uphill of the arc's center. It shall be constructed in a length sufficient to extend across the expected flow path.

11-12 SILT FENCE

A. Definition - A barrier of extra strength filter fabric which has been entrenched and attached to supporting posts to reduce runoff velocity and detain sediment.

B. Applicability - Silt fences are used near disturbed areas where sheet or rill flows occur and velocities are low. Silt fences shall **not** be applied in the following conditions:

1. Where concentrated flows exceed 0.014 m^3/s (0.5 cfs).

2. Drainage areas of 0.4 hectares (1 acre) or more.

3. Where the slope is steeper than 2:1.

4. In channels.

D. Design

1. Placement of a silt fence shall be clearly defined on the plans.

2. Construction shall be per County of Sacramento Standard Construction Specifications Drawing 11-5.

3. The maximum slope length above the fence shall be no more than 9 meters (30 feet) times the slope steepness expressed as a ratio. For example, a 3:1 slope above a fence shall be no more than 27 meters (90 feet) long.

4. The depth of flow shall be evenly distributed across the fence.

5. The fence shall be placed on the contour and configured in the shape of a shallow arc with the ends uphill of the arc's center. It shall be constructed in a length sufficient to extend across the expected flow path.

11-13 STRAW BALE BARRIER

A. Definition - A barrier constructed with straw or hay bales across or at the toe of a slope to reduce runoff velocity and transport of sediment.

B. Applicability - Straw bale barriers shall ***not*** be applied in the following conditions:

1. Where concentrated flows occur.

2. On slopes steeper than 2:1.

C. Design

1. Placement of straw bale barriers shall be clearly defined on the plans.

2. Construction shall be per County of Sacramento Standard Construction Specifications Drawing 11-6.

3. The maximum slope length above the barrier shall be no more than 9 meters (30 feet) times the steepness expressed as a ratio. For example, the length of a 3:1 slope above a barrier shall be no more than 27 meters (90 feet). Bales shall be securely staked.

4. The depth of flow shall be evenly distributed across the barrier.

5. The barrier shall be placed on the contour and configured in the shape of a shallow arc with the ends uphill of the arc's center. It shall be constructed in a length sufficient to extend across the expected flow path.

11-14 STRAW BALE INLET FILTER

A. Definition - A temporary sediment barrier placed around a storm drain inlet to prevent sediment from entering the storm drainage system.

B. Applicability - Drop inlet protection is applicable after storm drain systems are installed. Straw bale inlet filters shall be allowed for use only at newly constructed drop inlet and manhole risers prior to paving.

Straw bale inlet filters shall ***not*** be allowed for use in the following circumstances:

1. On paved streets or parking lots.

2. In channels as protection for culverts or undercrossings.

C. Design

1. Placement of straw bale inlet filters shall be clearly defined on the plans.

2. Construction shall be per County of Sacramento Standard Construction Specifications Drawings 11-7.

3. Each drop inlet shall be provided with a filter.

4. Filters shall be removed prior to paving.

11-15 INLET FILTER

A. Definition - A temporary sediment barrier covering a storm drain drop inlet to prevent sediment and debris from entering the storm drainage system.

B. Applicability - Storm drain inlet filters or inlet filter bags (Section 11-16) shall be installed at all drop inlets on new or existing streets within or down stream of the construction site.

C. Design

1. Installation shall be per drawing 11-8.

11-16 INLET FILTER BAG

A. Definition - A temporary sediment barrier suspended within a storm drain drop inlet to prevent sediment and debris from entering the storm drainage system.

B. Applicability - Inlet filter bags or inlet filters (Section 11-15) shall be installed at all drop inlets on new or existing streets within or down stream of the construction site.

C. Design

1. Installation shall be per drawing 11-9.

11-17 CONCRETE STAMP

A. Definition - A message stamped into the concrete at each storm drain drop inlet to alert citizens not to dump into the storm drainage system.

B. Applicability – Concrete stamps shall be applied at all new or reconstructed storm drain inlets.

C. Design – All stamps shall be approved by the Director before being used. Installation shall be per drawing 11-10.

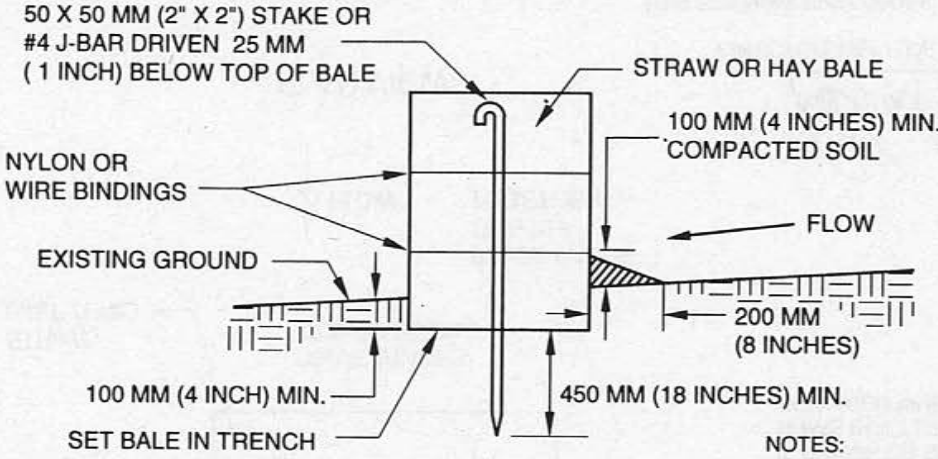

SECTION A-A

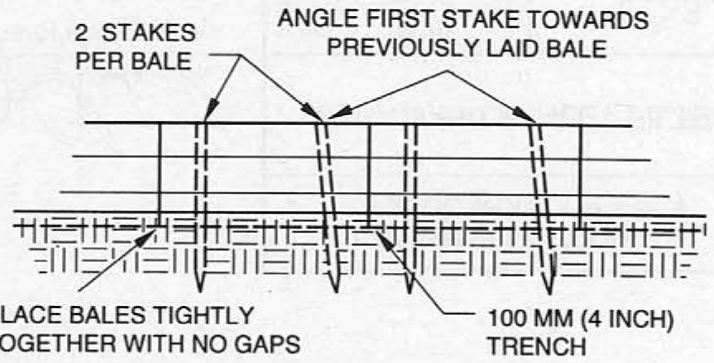

FRONT VIEW

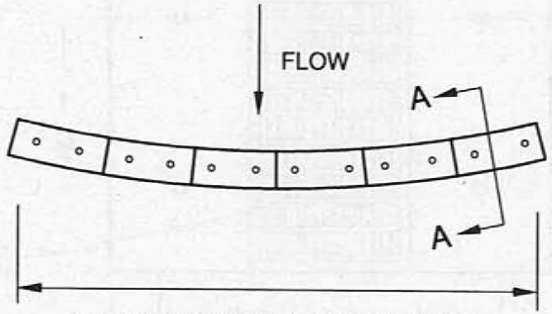

STRAW BALE ALIGNMENT

NOTES:

1 PLACE BALES IN 100 MM (4 INCH) DEEP TRENCH ALONG THE CONTOUR OF THE SLOPE IN THE SHAPE OF AN ARC WITH THE ENDS UPHILL OF THE ARC'S CENTER. BALES SHALL BE PLACED SO THAT BINDINGS ARE HORIZONTAL. MAXIMUM SPACING BETWEEN ROWS SHALL BE 9 M (30 FT) x THE SLOPE STEEPNESS EXPRESSED AS A RATIO.

2. BALES SHALL BE ANCHORED BY TWO 50 X 50 MM (2" X 2") STAKES OR #4 J-BAR DRIVEN THROUGH THE BALE AND INTO THE GROUND A MINIMUM DEPTH OF 450 MM (18 INCHES). STAKES OR J-BARS SHALL BE DRIVEN 25 MM (1 INCH) OR MORE BELOW THE TOP OF THE BALE. THE FIRST STAKE OR J-BAR IN EACH BALE SHALL BE DRIVEN AT AN ANGLE TOWARDS THE PREVIOUSLY LAID BALE TO FORCE THE BALES TIGHTLY TOGETHER.

3. AFTER BALES ARE STAKED IN PLACE, EXCAVATED SOIL SHALL BE BACKFILLED AGAINST THE UPHILL SIDE TO A MINIMUM HEIGHT OF 100 MM (4 INCHES).

4. CONTRACTOR SHALL INSPECT BALES WEEKLY AND AFTER EACH RAINFALL. REPAIRS SHALL BE MADE AS NECESSARY AND SEDIMENT SHALL BE REMOVED WHEN IT HAS ACCUMULATED TO A DEPTH OF 150 MM (6 INCHES). BALES SHALL BE REPLACED WHEN THEY HAVE BEEN DAMAGED, COLLAPSED OR DECOMPOSED.

Robert Shaw

DIRECTOR, DEPT. OF DISTRICT ENGINEERING

THIS DRAWING SUPERCEDES ALL PREVIOUS VERSIONS

SACRAMENTO COUNTY
PUBLIC WORKS AGENCY

STRAW BALE BARRIER

SCALE: NONE
DATE DRAWN: 3 OCT 1997
DRAWN BY: DH, SLP

EC-1

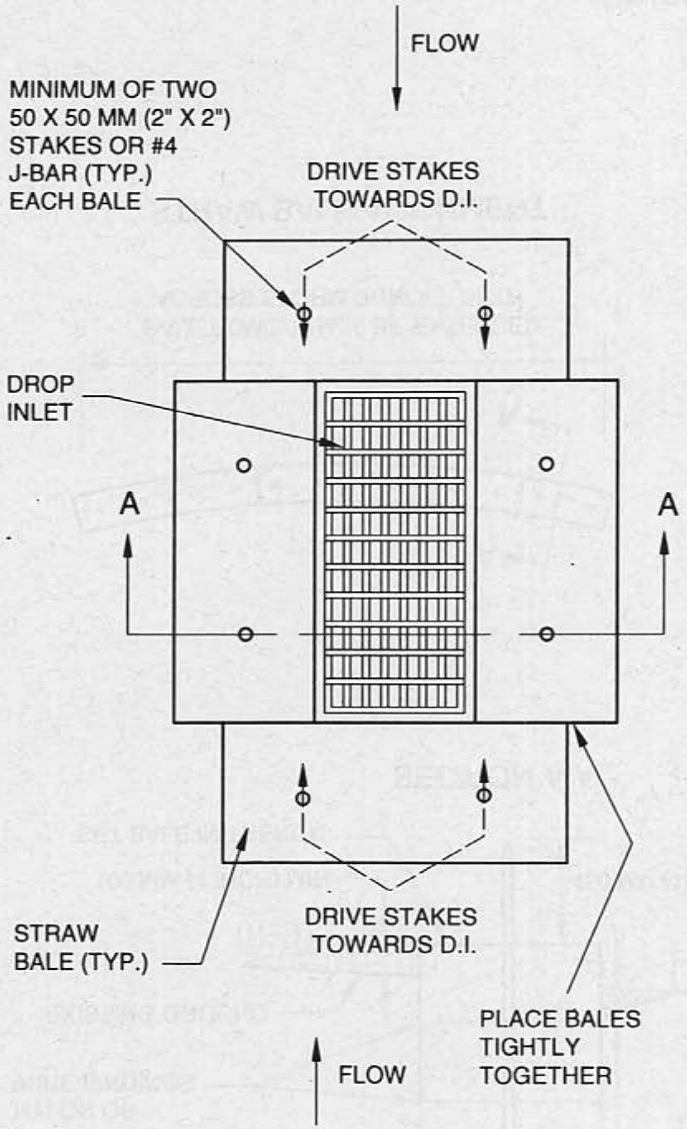

PLAN VIEW

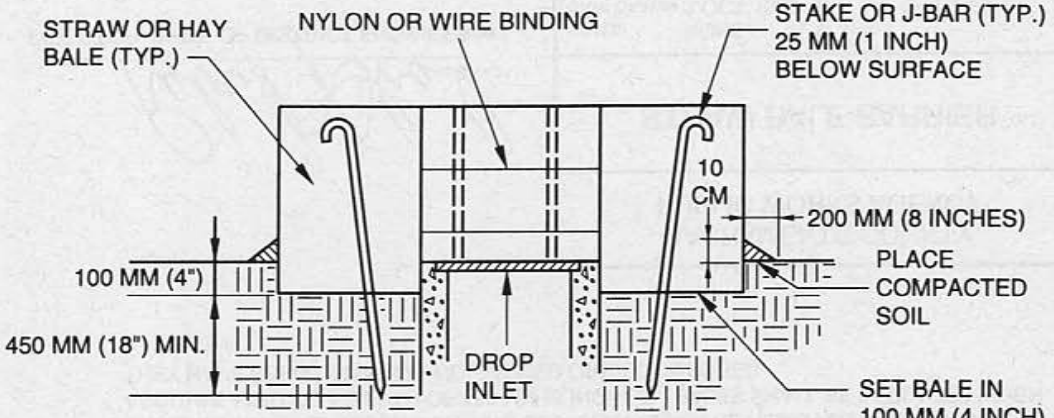

SECTION A-A

NOTES:

1. BALES SHALL BE PLACED TIGHTLY TOGETHER IN A TRENCH EXCAVATED A MINIMUM OF 100 MM (4 INCHES) BELOW THE INLET. BALES SHALL BE PLACED SO THAT BINDINGS ARE HORIZONTAL.
2. EACH BALE SHALL BE ANCHORED BY A MINIMUM OF TWO 50 X 50 MM (2" X 2") STAKES OR TWO #4 J-BARS DRIVEN THROUGH THE BALES AND INTO THE GROUND A MINIMUM DEPTH OF 450 MM (18 INCHES). TOPS OF STAKES OR J-BARS SHALL BE COUNTERSUNK A MINIMUM OF 25 MM (1 INCH) BELOW THE TOP OF THE BALE.
3. OUTER PERIMETER OF THE BALES SHALL BE BACKFILLED AND COMPACTED TO A DEPTH OF APPROXIMATELY 100 MM (4 INCHES) WITH EXCAVATED MATERIAL.
4. CONTRACTER SHALL INSPECT BALES WEEKLY AND AFTER EACH RAINFALL TO DETERMINE IF REPAIR OR SEDIMENT REMOVAL IS REQUIRED. SEDIMENT SHALL BE REMOVED WHEN IT HAS BUILT UP TO A DEPTH OF APPROXIMATELY 150 MM (6 INCHES). BALES SHALL BE REPLACED WHEN THEY HAVE BEEN DAMAGED, COLLAPSED OR DECOMPOSED.

DIRECTOR, DEPT. OF DISTRICT ENGINEERING

THIS DRAWING SUPECEDES ALL PREVIOUS VERSIONS

SACRAMENTO COUNTY
PUBLIC WORKS AGENCY

STRAW BALE INLET FILTER

SCALE: NONE
DATE DRAWN: 2 OCT 1995
DRAWN BY: DH, SLP

EC-3

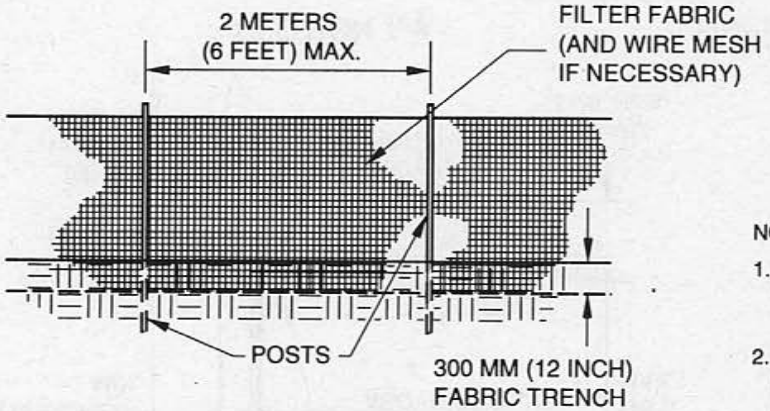

FRONT VIEW

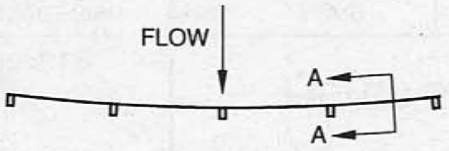

PLAN

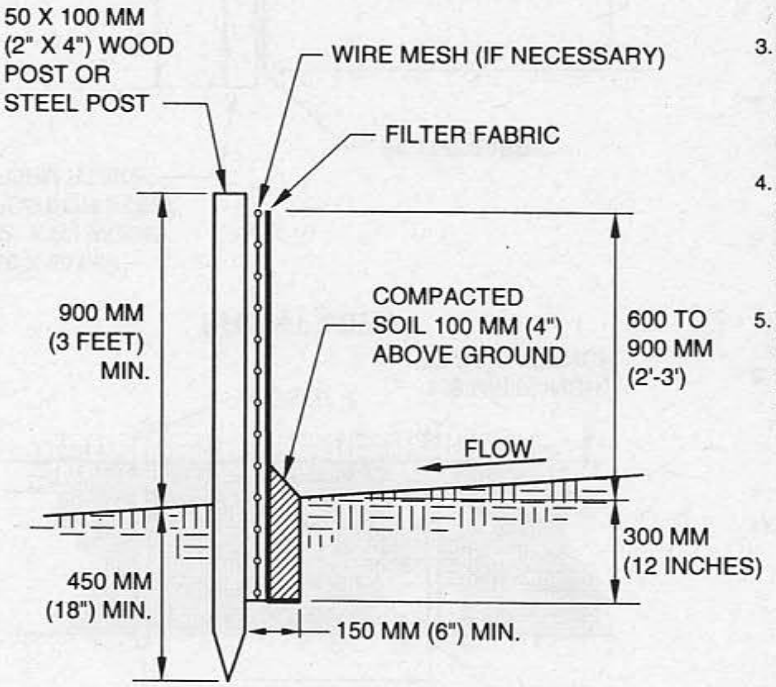

SECTION A-A

NOTES:

1. SILT FENCE SHALL BE CONSTRUCTED LONG ENOUGH TO EXTEND ACROSS THE EXPECTED FLOW PATH AND AS APPROVED BY THE ADMINISTRATOR. THE MAXIMUM DISTANCE BETWEEN SILT FENCES SHALL BE 9 METERS X THE SLOPE EXPRESSED AS A RATIO.
2. FILTER FABRIC SHALL BE PROPYLENE, NYLON, POLYESTER OR ETHYLENE YARN WITH A MINIMUM TENSILE STRENGTH OF 50 LBS. PER LINEAR FOOT AT 20 PERCENT MAXIMUM ELONGATION AND CONTAINING ULTRAVIOLET INHIBITORS. FILTER FABRIC SHALL RETAIN A MINIMUM OF 85% OF THE SOIL, BY WEIGHT, BASED ON SIEVE ANALYSIS, BUT IS NOT FINER THAN AN EQUIVALENT OPENING SIZE OF 70. WHEN STANDARD STRENGTH FABRIC IS USED, A WIRE MESH SUPPORT SHALL BE SECURELY FASTENED TO THE UPSLOPE SIDE OF POSTS.
3. SUPPORT POSTS SHALL BE A MINIMUM 1.4 METERS (4.5') LONG 50 X 100 MM (2" X 4") WOOD POSTS OR 'T' SECTION FENCE POSTS DRIVEN A MINIMUM OF 450 MM (18 INCHES) INTO THE GROUND. POSTS SHALL BE SPACED A MAXIMUM OF 2 METERS (6 FEET) APART. FABRIC SHALL BE SECURELY FASTENED TO POSTS WITH 13 MM (.5 INCH) STAPLES OR 16 GAUGE WIRE TIES SPACED A MAXIMUM OF 150 MM (6 INCHES) APART.
4. A 300 MM (12 INCH) FABRIC TRENCH SHALL BE EXCAVATED ALONG THE UPHILL SIDE OF SILT FENCE POSTS. THE BOTTOM EDGE OF THE FABRIC SHALL EXTEND TO AND ACROSS THE BOTTOM OF THE TRENCH. THE TRENCH SHALL BE BACKFILLED TO 100 MM (4 INCHES) ABOVE GROUND AND COMPACTED TO BURY AND SECURE THE BOTTOM OF THE FILTER FABRIC.
5. CONTRACTER SHALL MAKE INSPECTIONS WEEKLY DURING THE WET SEASON, MONTHLY DURING THE DRY SEASON AND IMMEDIATELY AFTER EACH RAINFALL TO DETERMINE IF REPAIRS AND SEDIMENT REMOVAL IS REQUIRED. SEDIMENT SHALL BE REMOVED BEFORE IT HAS REACHED ONE THIRD THE HEIGHT OF THE FILTER FABRIC.

Robert F Shank

DIRECTOR, DEPT. OF DISTRICT ENGINEERING

THIS DRAWING SUPERCEDES ALL PREVIOUS VERSIONS

SACRAMENTO COUNTY PUBLIC WORKS AGENCY	
SILT FENCE	
SCALE: NONE DATE DRAWN: 2 OCT 1995 DRAWN BY: DH, SLP	EC-4

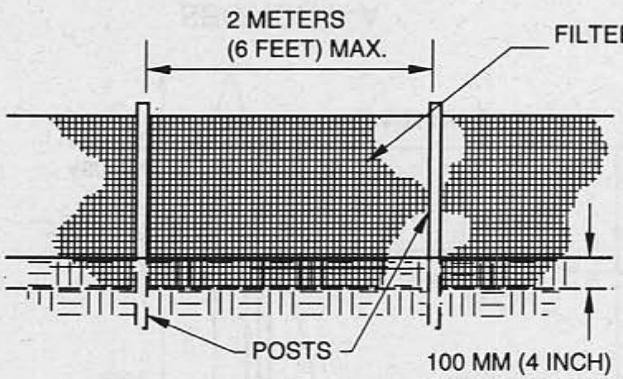

FRONT VIEW

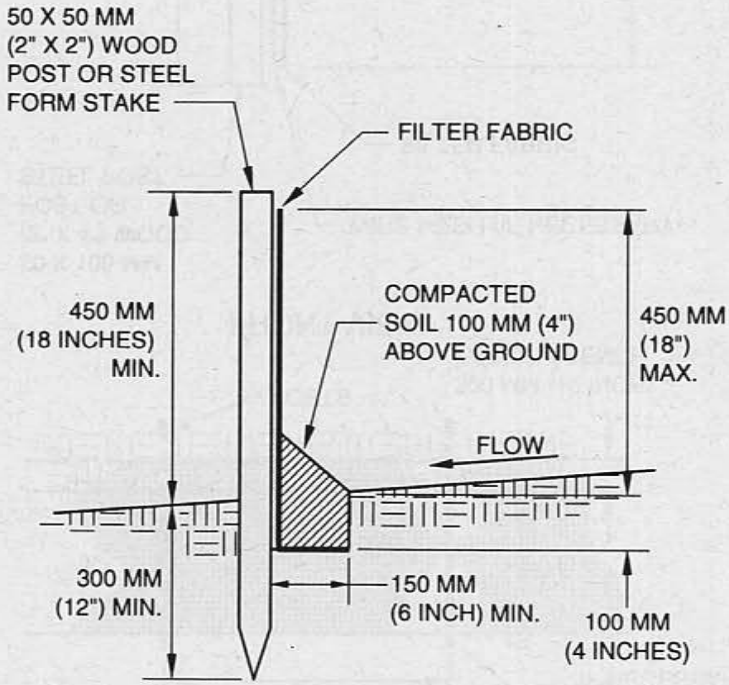

SECTION A-A

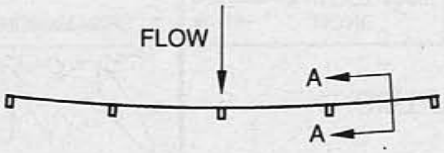

PLAN

NOTES:

1. FILTER BARRIER SHALL BE CONSTRUCTED LONG ENOUGH TO EXTEND ACROSS THE EXPECTED FLOW PATH AND AS APPROVED BY THE ADMINISTRATOR. THE MAXIMUM DISTANCE BETWEEN FILTER BARRIERS SHALL BE 4.5 METERS X THE SLOPE EXPRESSED AS A RATIO.
2. FILTER FABRIC SHALL BE PROPYLENE, NYLON, POLYESTER OR ETHYLENE YARN WITH A MINIMUM TENSILE STRENGTH OF 50 LBS. PER LINEAR FOOT AT 20 PERCENT MAXIMUM ELONGATION AND CONTAINING ULTRAVIOLET INHIBITORS. FILTER FABRIC SHALL RETAIN A MINIMUM OF 85% OF THE SOIL, BY WEIGHT, BASED ON SIEVE ANALYSIS, BUT IS NOT FINER THAN AN EQUIVALENT OPENING SIZE OF 70.
3. SUPPORT POSTS SHALL BE A MINIMUM 750 MM (30 INCH) LONG 50 X 50 MM (2" X 2") WOOD POSTS OR STEEL FORM STAKES DRIVEN A MINIMUM OF 300 MM (12 INCHES) INTO THE GROUND. POSTS SHALL BE SPACED A MAXIMUM OF 2 METERS (6 FEET) APART. FABRIC SHALL BE SECURELY FASTENED TO POSTS WITH 13 MM (.5 INCH) STAPLES OR 16 GAUGE WIRE TIES SPACED A MAXIMUM OF 150 MM (6 INCHES) APART.
4. A 100 MM (4 INCH) FABRIC TRENCH SHALL BE EXCAVATED ALONG THE UPHILL SIDE OF FILTER BARRIER POSTS. THE BOTTOM EDGE OF THE FABRIC SHALL EXTEND TO AND ACROSS THE BOTTOM OF THE TRENCH. THE TRENCH SHALL BE BACKFILLED TO 100 MM (4 INCHES) ABOVE GROUND AND COMPACTED TO BURY AND SECURE THE BOTTOM OF THE FILTER FABRIC.
5. CONTRACTER SHALL MAKE INSPECTIONS WEEKLY DURING THE WET SEASON, MONTHLY DURING THE DRY SEASON AND IMMEDIATELY AFTER EACH RAINFALL TO DETERMINE IF REPAIRS AND SEDIMENT REMOVAL IS REQUIRED. SEDIMENT SHALL BE REMOVED BEFORE IT HAS REACHED ONE THIRD THE HEIGHT OF THE FILTER FABRIC.

DIRECTOR, DEPT. OF DISTRICT ENGINEERING

THIS DRAWING SUPERCEDES ALL PREVIOUS VERSIONS

SACRAMENTO COUNTY
PUBLIC WORKS AGENCY

FILTER BARRIER

SCALE: NONE
DATE DRAWN: 2 OCT 1995
DRAWN BY: DH, SLP

EC-5

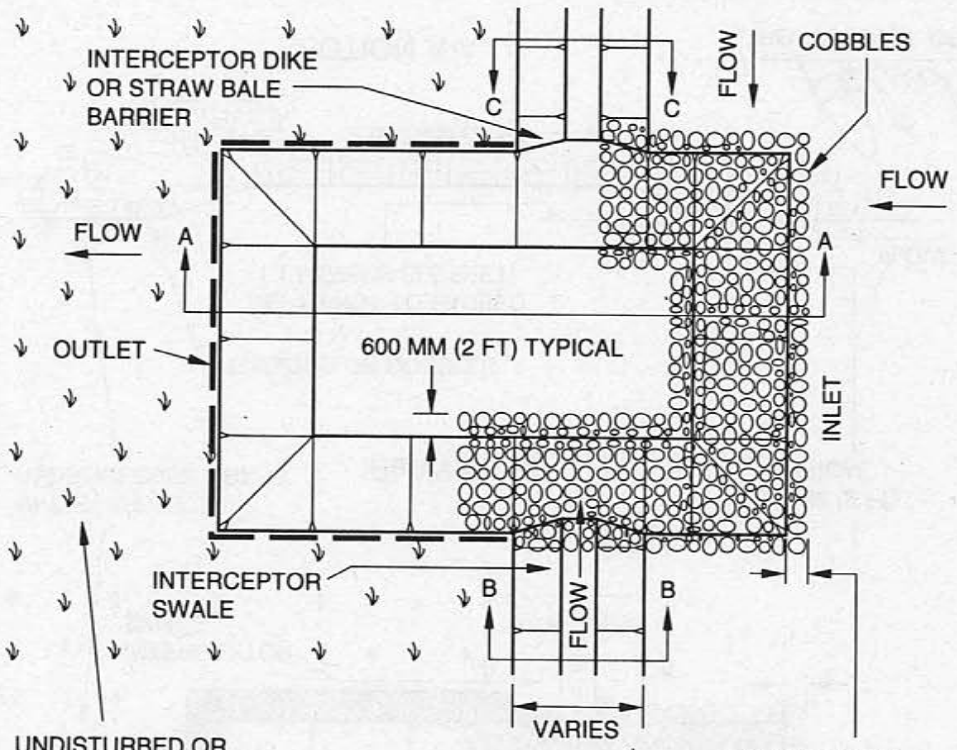

PLAN VIEW

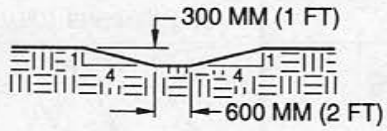

SECTION B - B

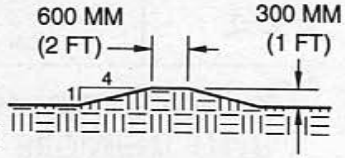

SECTION C - C

NOTES

1. DIMENSIONS OF SEDIMENT TRAPS , DIKES, AND SWALES SHALL BE APPROVED BY THE ADMINISTRATOR.
2. INTERCEPTION DIKES AND SWALES SHALL BE CONSTRUCTED TO DRAIN SURFACE RUNOFF INTO SEDIMENT TRAPS.
3. TRAPS SHALL BE EXCAVATED WITH APPROPRIATE EQUIPMENT, TAKING CARE NOT TO DISTURB VEGETATION OR SOIL AT OUTLET CREST. SIDE SLOPES SHALL BE 3:1 OR FLATTER. MAXIMUM TRAP DEPTH SHALL BE 1.1 METERS (3.5 FEET).
4. COBBLES CONFORMING TO COUNTY STANDARD SPECIFICATIONS SHALL BE PLACED ON THE TOPS, SLOPES, AND BOTTOMS OF THE INLET SIDES. COBBLES SHALL EXTEND A MINIMUM OF 600 MM (2 FEET) BEYOND THE TOP AND TOE OF SLOPES.
5. PERIMETER OF THE SEDIMENT TRAP SHALL BE HYDROSEEDED 3 METERS (10 FEET) BEYOND EDGE OF EXCAVATION IF EXISTING VEGETATION IS THIN, DISTURBED, OR NONEXISTENT.
6. THE CONTRACTOR SHALL INSPECT SEDIMENT TRAPS WEEKLY AND AFTER EACH RAINFALL AND REPAIR AS NECESSARY. SEDIMENT SHALL BE REMOVED FROM THE BOTTOM OF THE TRAP WHEN 300 MM (1 FOOT) DEEP OR LESS.

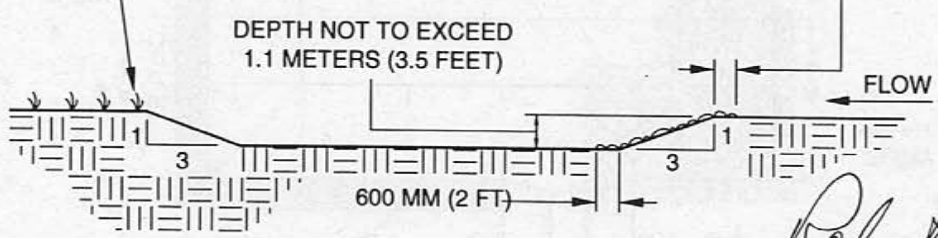

SECTION A-A

DIRECTOR, DEPT. OF DISTRICT ENGINEERING

THIS DRAWING SUPERCEDES ALL PREVIOUS VERSIONS

SACRAMENTO COUNTY
PUBLIC WORKS AGENCY

SEDIMENT TRAP
VEGETATED OUTLET

SCALE: NONE
DATE DRAWN: 2 OCT 1995
DRAWN BY: SLP

EC-6

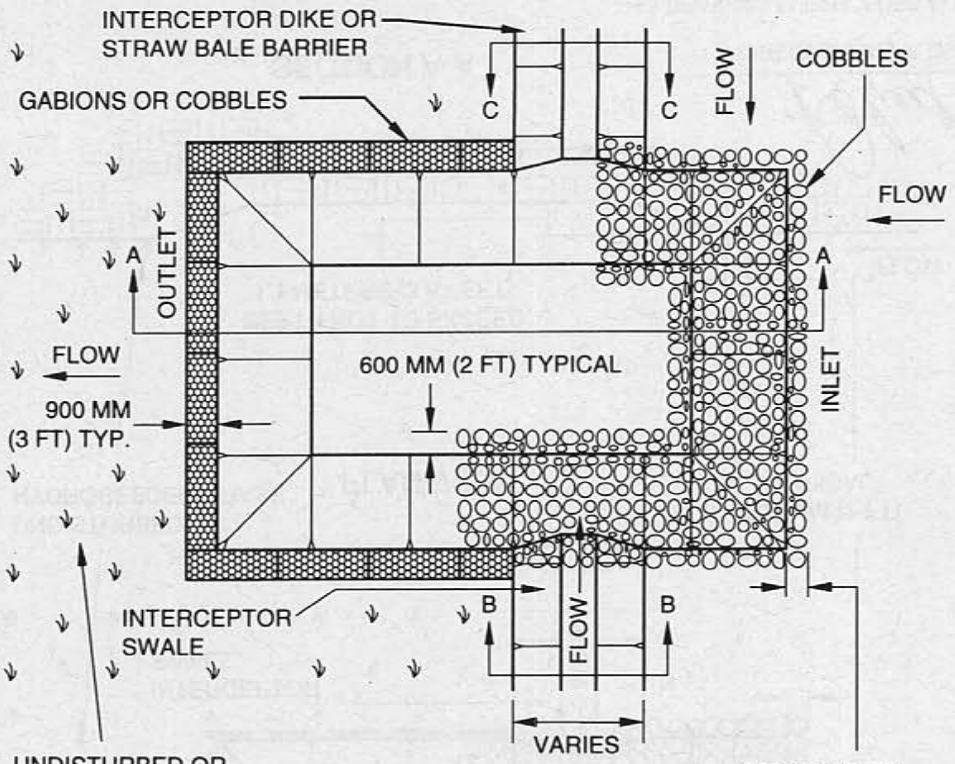

PLAN VIEW

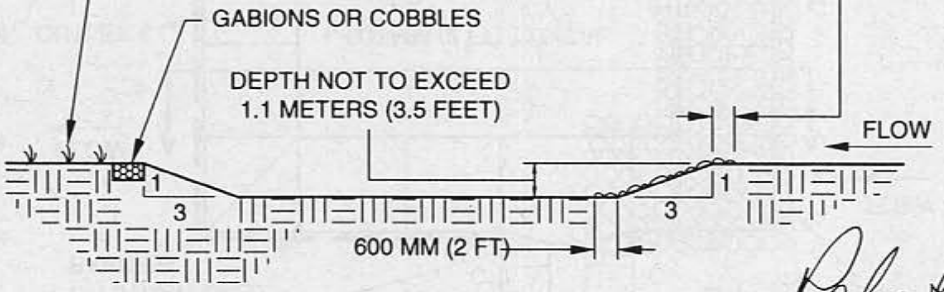

SECTION A-A

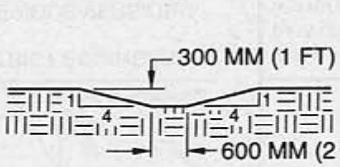

SECTION B - B

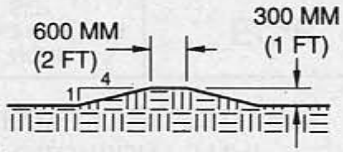

SECTION C - C

NOTES

1. DIMENSIONS OF SEDIMENT TRAPS, DIKES, AND SWALES SHALL BE APPROVED BY THE ADMINISTRATOR.
2. INTERCEPTION DIKES AND SWALES SHALL BE CONSTRUCTED TO DRAIN SURFACE RUNOFF INTO SEDIMENT TRAPS.
3. TRAPS SHALL BE EXCAVATED WITH APPROPRIATE EQUIPMENT, TAKING CARE NOT TO DISTURB VEGETATION OR SOIL AT OUTLET CREST. SIDE SLOPES SHALL BE 3:1 OR FLATTER. MAXIMUM TRAP DEPTH SHALL BE 1.1 METERS (3.5 FEET).
4. COBBLES CONFORMING TO COUNTY STANDARD SPECIFICATIONS SHALL BE PLACED ON THE TOPS, SLOPES, AND BOTTOMS OF THE INLET SIDES. COBBLES SHALL EXTEND A MINIMUM OF 600 MM (2 FEET) BEYOND THE TOP AND TOE OF SLOPES.
5. PERIMETER OF SEDIMENT TRAPS SHALL BE STABILIZED WITH GABIONS OR COBBLES AND HYDROSEEDED 3 METERS (10 FEET) BEYOND EDGE OF EXCAVATION IF EXISTING VEGETATION IS THIN, DISTURBED, OR NONEXISTENT.
6. THE CONTRACTOR SHALL INSPECT SEDIMENT TRAPS WEEKLY AND AFTER EACH RAINFALL AND REPAIR AS NECESSARY. SEDIMENT SHALL BE REMOVED FROM THE BOTTOM OF THE TRAP WHEN 300 MM (1 FOOT) DEEP OR LESS.

Robert J. Shaw

DIRECTOR, DEPT. OF DISTRICT ENGINEERING

THIS DRAWING SUPERCEDES ALL PREVIOUS VERSIONS

SACRAMENTO COUNTY
PUBLIC WORKS AGENCY

SEDIMENT TRAP
STABILIZED OUTLET

SCALE: NONE
DATE DRAWN: 2 OCT 1995
DRAWN BY: SLP

EC-7

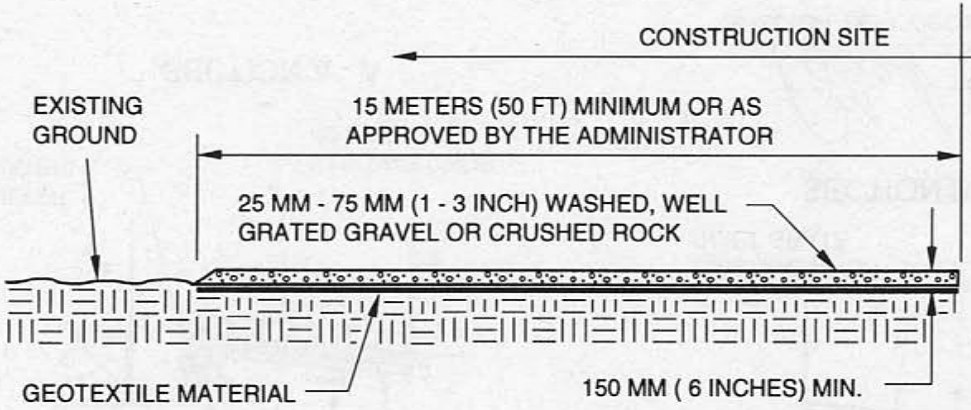

SECTION A-A

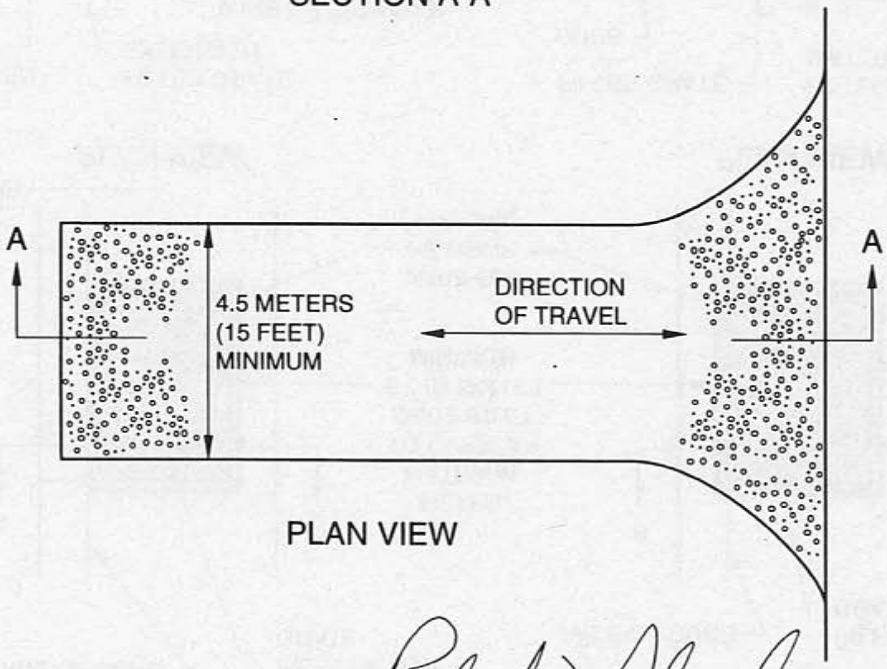

PLAN VIEW

NOTES

1. STABILIZED CONSTRUCTION SITE ACCESS SHALL BE CONSTRUCTED OF 25 - 75 MM (1 - 3 INCH) WASHED, WELL GRATED GRAVEL OR CRUSHED ROCK. MATERIAL SHALL BE PLACED TO A MINIMUM THICKNESS OF 150 MM (6 INCHES).
2. LENGTH OF ENTRANCE SHALL BE A MINIMUM OF 15 METERS (50 FEET). WIDTH SHALL BE A MINIMUM OF 4.5 METERS (15 FEET) OR GREATER IF NECESSARY TO COVER ALL VEHICULAR INGRESS AND EGRESS. PROVIDE AMPLE TURNING RADII.
3. THE ENTRANCE SHALL BE KEPT IN GOOD CONDITION BY OCCASIONAL TOP DRESSING WITH MATERIAL AS SPECIFIED IN NOTE 1.
4. ACCESSES SHALL BE INSPECTED WEEKLY DURING PERIODS OF HEAVY USAGE, MONTHLY DURING NORMAL USAGE, AND AFTER EACH RAINFALL, WITH MAINTENANCE PROVIDED AS NECESSARY. PERIODIC TOP DRESSING SHALL BE DONE AS NEEDED.

Robert J. Shanks

DIRECTOR, DEPT. OF DISTRICT ENGINEERING

THIS DRAWING SUPERCEDES ALL PREVIOUS VERSIONS

SACRAMENTO COUNTY
PUBLIC WORKS AGENCY

STABILIZED CONSTRUCTION SITE ACCESS

SCALE: NONE
DATE DRAWN: 3 OCT 1997
DRAWN BY: SLP

EC-8

PLACEMENT AT TYPE B AND E DROP INLETS

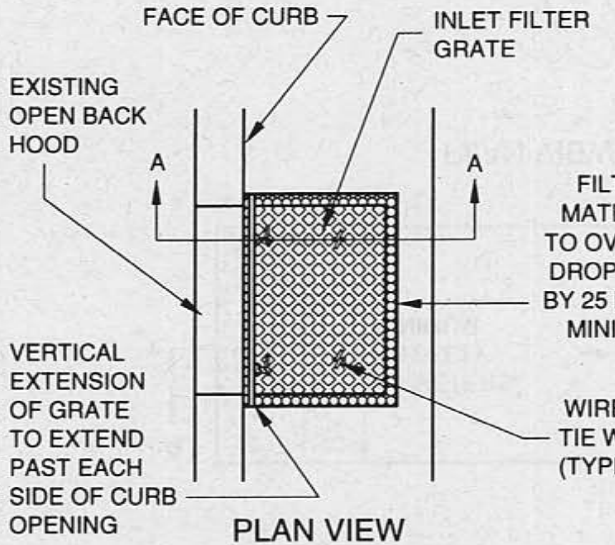

PLAN VIEW

PLACEMENT AT TYPE A, C, D, & F DROP INLETS AND PARKING LOTS

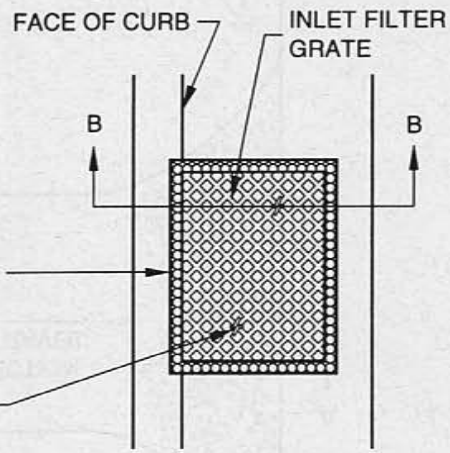

PLAN VIEW

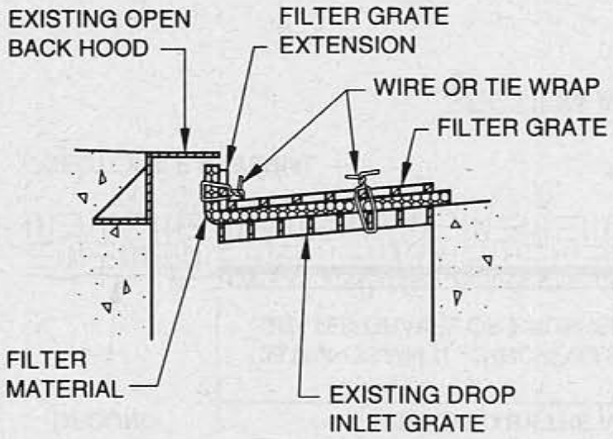

SECTION A - A

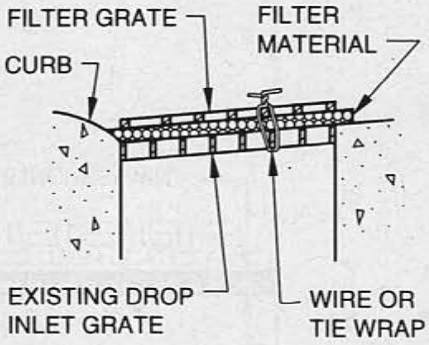

SECTION B - B

NOTES

1. THE MAXIMUM DRAINAGE AREA PER FILTER SHALL BE NO MORE THAN 0.8 HECTARES (2 ACRES).
2. THE FILTER PAD SHALL BE 25 MM (1 INCH) THICK CLEANABLE POLYESTER FIBER AND ACRYLIC LATEX RESIN OR APPROVED EQUAL. THE FILTER PAD SHALL OVERLAP DROP INLET ON ALL SIDES BY A MINIMUM OF 25 MM (1").
3. THE FILTER GRATE SHALL BE MADE OF EXPANDED METAL OR REBAR AND BE OF SUFFICIENT STRENGTH TO PREVENT BENDING WHEN DRIVEN OVER. GRATE MATERIAL SHALL NOT EXCEED 13 MM (0.5 INCH) THICK. THE GRATE SHALL HAVE A MINIMUM 60% OPEN AREA. GRATES USED AT TYPE B AND E INLETS SHALL HAVE A VERTICAL EXTENSION TO COVER THE CURB OPENING. THE FILTER GRATE SHALL BE THE SAME SIZE AS THE DROP INLET GRATE.
4. THE FILTER PAD AND GRATE SHALL BE SECURELY ATTACHED TO THE DROP INLET BY WIRE OR TIE-WRAPS.
5. INLET FILTERS SHALL BE INSPECTED WEEKLY AND AFTER EACH RAINFALL. REPAIRS AND SEDIMENT AND DEBRIS REMOVAL SHALL BE MADE AS NECESSARY.

Robert J. Shanks

DIRECTOR, DEPT. OF DISTRICT ENGINEERING

THIS DRAWING SUPERCEDES ALL PREVIOUS VERSIONS

SACRAMENTO COUNTY
PUBLIC WORKS AGENCY

STORM DRAIN INLET FILTER

SCALE: NONE
DATE DRAWN: 2 OCT 1995
DRAWN BY: SLP

EC-9

PLACEMENT AT TYPE B AND E DROP INLETS

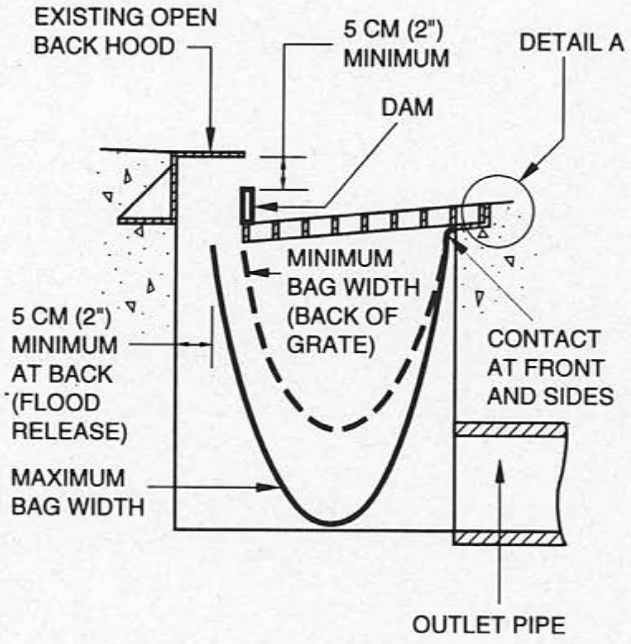

PLACEMENT AT TYPE A, C, D, & F DROP INLETS AND PARKING LOTS

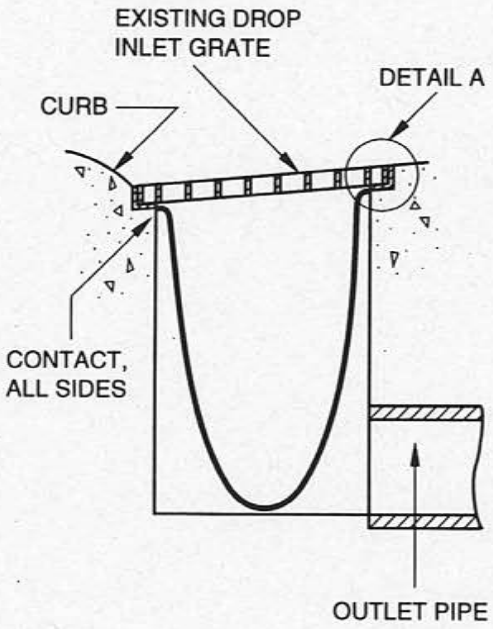

DETAIL A

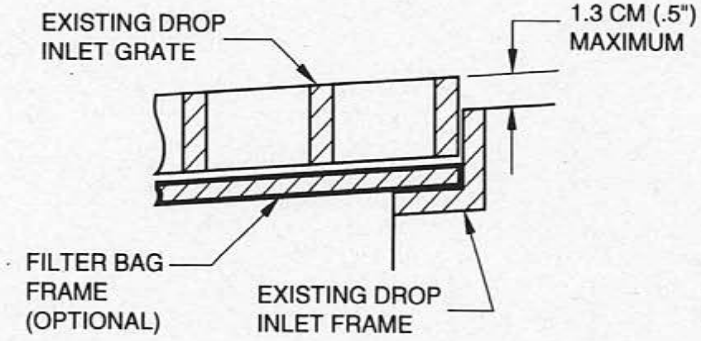

NOTES

1. THE MAXIMUM DRAINAGE AREA PER FILTER SHALL BE NO MORE THAN 0.8 HECTARES (2 ACRES).
2. THE FILTER BAG SHALL BE MANUFACTURED FROM UV RESISTANT POLYPROPYLENE, NYLON, POLYESTER, OR ETHYLENE FABRIC WITH A MINIMUM TENSILE STRENGTH OF 50 LBS PER LINEAL FOOT, AN EQUIVALENT OPENING SIZE NOT GREATER THAN A 20 SIEVE AND WITH A MINIMUM FLOW RATE OF 40 GALLONS/MINUTE/SQ FT.
3. THE FILTER BAG MAY BE SUSPENDED FROM OR HELD IN PLACE BY THE EXISTING INLET GRATE (OR OTHER APPROVED METHOD), PROVIDING NO MODIFICATION OR DAMAGE SHALL BE DONE TO THE INLET GRATE OR FRAME. THE INLET GRATE SHALL NOT BE CAUSED TO REST MORE THAN 1.3 CM (.5") ABOVE THE INLET FRAME (SEE DETAIL A).
4. THE FILTER BAG MAY EXTEND TO THE BOTTOM OF THE INLET BOX PROVIDED THE OUTLET PIPE IS UNOBSTRUCTED.

5 FLOWS SHALL NOT BE ALLOWED TO BYPASS THE BAG. THE BAG OR ITS FRAME SHALL CATCH FLOWS AT ALL SIDES OF THE INLET, EXCEPT AS SHOWN FOR FLOOD RELEASE.

6 INLET FILTER BAGS SHALL BE INSPECTED WEEKLY AND AFTER EACH RAINFALL DURING THE WET SEASON AND MONTHLY DURING THE DRY SEASON. SEDIMENT AND DEBRIS SHALL BE REMOVED BEFORE ACCUMULATIONS HAVE REACHED ONE THIRD THE DEPTH OF THE BAG. BAGS SHALL BE REPAIRED OR REPLACED AS SOON AS DAMAGE OCCURS.

DIRECTOR, DEPT. OF DISTRICT ENGINEERING

THIS DRAWING SUPERCEDES ALL PREVIOUS VERSIONS

SACRAMENTO COUNTY
PUBLIC WORKS AGENCY

STORM DRAIN INLET FILTER BAG

SCALE: NONE DATE DRAWN: FEB 1999 DRAWN BY: SLP	EC-10

SECTION 12

SUBDIVISION SURVEY MONUMENTS

CONTENTS **Page**

12-1 Survey Monument Requirements 12-1

SECTION 12
SUBDIVISION SURVEY MONUMENTS

12-1 SURVEY MONUMENT REQUIREMENTS:

A. The Consulting Engineer shall place survey monuments at the following locations within subdivision improvements:

- At the intersections of all street centerlines.
- At the beginning and end of all curves on the street centerlines.
- At all subdivision boundary corners designated by the Director and such other locations so as to enable any lot or portion of the improvement to be retraced or located.

The monuments shall be as follows;

1. Subdivision boundary monuments, except those in street pavement, shall not be less than 1-1/4 inch galvanized iron pipe, 30 inches in length, capped and tagged.

2. Subdivision boundary monuments in street pavement shall be not less than ¾ inch galvanized iron pipe, 18 inches in length. Top of pipe shall be driven flush with surface pavement.

3. Centerline and street intersection monuments shall be ¾ inch galvanized iron pipe or No. 5 reinforcing bar, not less than 12 inches in length. Top of the pipe or bar shall be driven flush with pavement surface.

All monuments shall be referenced to permanent objects located nearby and all ties shall be furnished the Director for general public use. Final approval of the subdivision will not be made until such ties have been furnished to the Director.

B. Survey monuments shall also be placed by the consulting Engineer at all the following locations within the improvement, and off-site, due to deed dependency, as required by the County:

- Section corners
- Quarter corners
- Centers of sections.

The section corner, quarter corner, and centers of sections monuments shall be Class "B' concrete, poured in place, with minimum dimensions of 8 inches by 8 inches by 24 inches. Ferrous material shall be placed in the monument to make it locatable with a magnetic locator. A metal survey disc shall be installed by the Consulting Engineer before the concrete has acquired its initial set and shall be firmly embedded in the concrete.

As an alternate monument, a 2" galvanized iron pipe, not less than 24 " in length shall be placed in paved areas, and 48" in length in unpaved areas. If the 2" galvanized iron pipe alternate is used, the metal disc shall be embedded in epoxy or concrete poured in the pipe.

Survey monument boxes shall be provided and placed by the Consulting Engineer at all quarter corners and section corners located within ultimate rights-of-way. Survey monument boxes shall be cylindrical with at least a 9 inch inside diameter, a minimum 12-inch height and shall have interlocking rings suitable for traffic situations.

C. The Consulting Engineer shall show the location and character of all survey monuments within the construction area and place a note on all construction plans stating that the Contractor is responsible for the protection of all existing monuments and other survey markers in accordance with section 8771 of the Land Surveyor's Act.